Dec. 15, 1970 R. J. SCHENK 3,546,765

FEMALE ELECTRICAL CONTACT EXTRACTION TOOL

Filed May 9, 1968

Fig. 1.

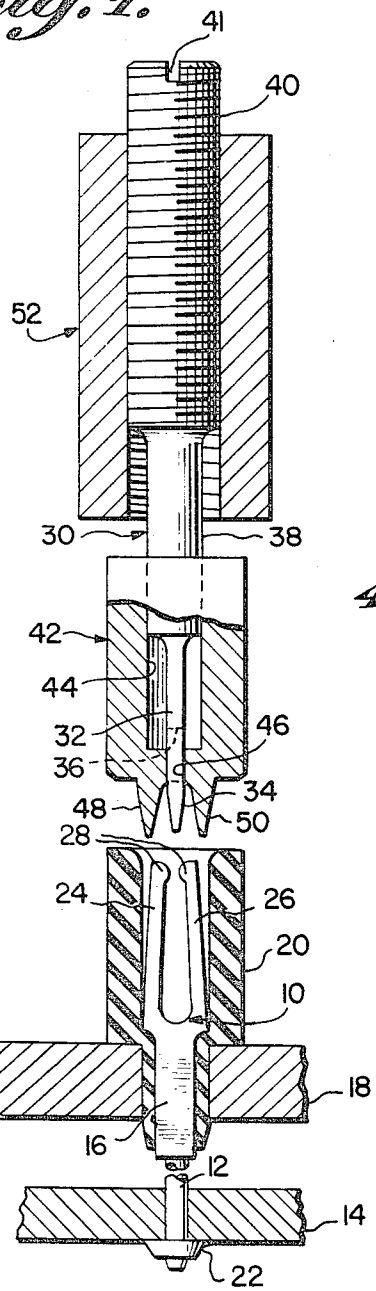

Fig. 2.

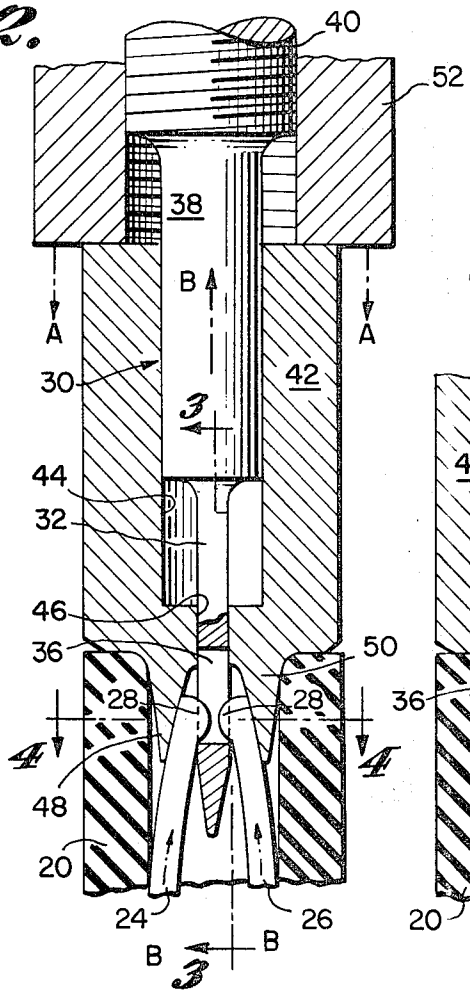

Fig. 3.

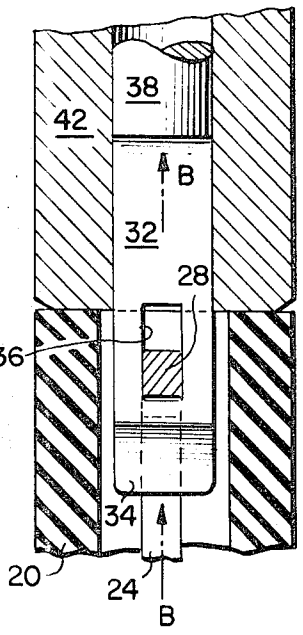

Fig. 4.

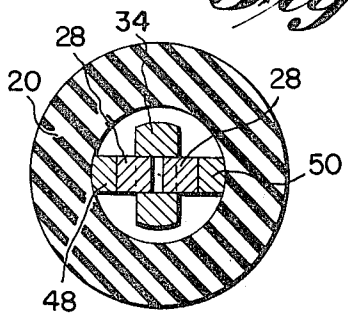

INVENTOR

ROBERT J. SCHENK

United States Patent Office 3,546,765
Patented Dec. 15, 1970

3,546,765

FEMALE ELECTRICAL CONTACT EXTRACTION TOOL

Robert J. Schenk, Pompton Plains, N.J., assignor to Singer-General Precision, Inc., Little Falls, N.J., a corporation of Delaware

Filed May 9, 1968, Ser. No. 728,008
Int. Cl. B25b 27/02
U.S. Cl. 29—203 8 Claims

ABSTRACT OF THE DISCLOSURE

A device for extracting a forked connector from a mother board connector assembly wherein the connector features a pair of oppositely facing inwardly extending lobes on the free ends of the forked portion thereof. The extracting device comprises an elongated engaging member having a shank portion terminating in a tapered portion at one of its free ends. The thickness of the shank portion is slightly greater than normal spacing between the lobes on the forked connector. At its other free end the extraction member includes a cylindrically enlarged externally threaded portion for cooperating with an internally threaded bushing member engageable therewith. A second bushing member or clamp having a pair of tapered jaws on its downwardly extending free end is adapted for slideable displacement along the shank portion of the engaging member by rotation of the first mentioned threaded bushing member which latter magnetically engages the upper end of the clamping bushing. The tapered jaws on the clamping bushing are sized to engage each forked connector therebetween. In operation, the tapered terminal portion of the engaging member is inserted between the lobes of the forked connector until the latter engages the transverse opening in the shank portion thereof. The threaded bushing member is then rotated causing the clamping bushing to slide down along the shank portion of the engaging member until the jaws of the clamping bushing extend over the forked ends of the connector thereby firmly caming the lobes toward one another through the transverse opening in the shank portion of the engaging member and securing the lobes within this transverse opening. The connector may then be extracted from the mother board by manually gripping the threaded bushing member and exerting an axial force on the engagement member.

BACKGROUND OF THE INVENTION

This invention relates to a device for extracting an electrical contact from a mother board assembly or the like, and more particularly, to a tool for extracting a forked female connector upwardly from a printed circuit board. Although several devices have been proposed for extracting male connectors from a mother board or the like, previous proposals for the extraction of female connectors have generally included removing the solder connection between the contact and the mother board and applying pressure evenly from the bottom of the board to push the connector out. However, this is time consuming and may cause breakage of both the connector and the mother board.

SUMMARY OF THE INVENTION

It is, therefore, an object of the present invention to provide an extraction tool for extracting a forked female connector from the top side of a mother board assembly or the like in a relatively quick manner which minimizes damage to the board and to the connector.

Briefly summarized, the extraction tool of the present invention includes an elongated extraction member which

is adapted to be inserted between the forked portion of the female connector, along with engaging means for clamping the forked portion of the connector into engagement with the extraction member and retaining means for retaining the forked portion of the connector and the engaging means in their clamped position. Then, the solder is removed from the connector beneath the mother board and an axial force is exerted on the extraction pin in an upward direction to extract the connector.

BRIEF DESCRIPTION OF THE DRAWINGS

Reference is now made to the accompanying drawings for a better understanding of the nature and objects of the extraction tool of the present invention, which drawings illustrate the best mode presently contemplated for carrying out the objects of the invention and its principles, and are not to be construed as restrictions or limitations on its scope. In the drawings:

FIG. 1 is a side elevational view, partially in section, showing the extraction tool of the present invention immediately adjacent a mounted female connector;

FIG. 2 is an enlarged partial side elevational view similar to FIG. 1, but showing the extraction tool in engagement with the female connector immediately prior to withdrawal thereof;

FIG. 3 is a cross sectional view taken along line 3—3 of FIG. 2; and

FIG. 4 is a cross sectional view taken along line 4—4 of FIG. 2.

DESCRIPTION OF THE PREFERRED EMBODIMENTS

Referring now to the drawings, and specifically to FIG. 1 thereof, the reference numeral **10** refers to a standard female connector which is adapted to receive a corresponding male connector (not shown) to complete an electrical circuit. Connector **10** has a first shank portion **12** mounted through a circuit board **14**, and a second shank portion **16** extending through a mounting plate **18**. A hollow cylindrical insulator **20** of resilient material extends around the connector **10** and through the same hole in mounting plate **18** to insulate the former from the latter, and the end portion of shank portion **12** is soldered to the undersurface of circuit board **14** as shown at **22**. It is understood that the above arrangement is generally known, and can be varied in accordance with particular design considerations. For example, the particular shape of the shank portions **12** and **16** can be varied and the use of the mounting plate **18** or the circuit board **14** can be eliminated.

The portion of connector **10** extending upwardly from mounting plate **18** consists of two fork members **24** and **26**, each terminating in an inwardly extending lobe **28** in order to accommodate and clamp a corresponding male connector in a known manner.

The extraction tool of the present invention is designed to remove connector **10** outwardly from the tops of mounting plate **18** and circuit board **14**, and from within insulator **20**. The tool generally consists of three main cooperating members: an extraction pin **30**, a clamping bushing **42** slidably mounted for movement near one end portion of pin **30**, and an internally threaded bushing **52** threadedly mounted adjacent the other end portion of pin **30**. These members are shown in their assembled condition in FIG. 1, but immediately prior to operation on the connector **10**.

Extraction pin **30** has three shank portions of varying shape. The first shank portion **32** is of a generally rectangular shape in plan view, and has a head **34** at one end which is of a tapered cross section. A transversely extending hole **36** is formed through the shank portion adjacent head **34**. The second shank portion **38** of ex-

traction pin **30** has a cylindrical cross section, and the third shank portion **40** has external threads. The third shank portion has a larger diameter than the second shank portion and has a screw driver slot **41** formed in the end thereof.

The clamping bushing **42** has a central bore **44** formed therein which has substantially the same diameter as the shank portion **38** of the extraction pin **30**, so that the upper end of the clamping bushing **42** can be supported for slidable movement along shank portion **38**. The lower end of the clamping bushing **42** has a slot **46** communicating with the central bore **44** for slidably keying the clamping bushing on the shank portion **32** of the extraction pin **30**. A pair of tapered jaw members **48** and **50** project downwardly from the lower end of clamping bushing **42** on opposite sides of the head **34** of the extraction pin **30**. The clamping bushing **42** is magnetized so that it will not fall off extraction pin **30**. The internally threaded bushing **52** is threadably engaged with the threaded shank portion **40** of the extraction pin **30** for relative movement with respect thereto.

In operation the assembled tool is moved to the immediate proximity of the connector **10** and the tapered head **34** of the extraction pin **30** is inserted between the lobes **28** of the fork members **24** and **26** of the connector **10**, the latter having previously been released from the solder connection **22** underneath circuit board **14**. The extraction pin **30** is then moved towards circuit board **14** with the lobes **28** riding on the tapered head **34** causing the lobes to be cammed slightly outward until they can snap into the hole **36**, as shown in FIGS. 2–4.

The extraction pin is then held in a fixed position and the threaded bushing **52** is rotated causing it to move in a direction indicated by the arrows A in FIG. 2. This movement continues until the threaded bushing **52** engages the clamping bushing **42** and pushes it in the same direction along extraction pin **30** until the clamping bushing **42** abuts against the insulator **20** as shown in FIGS. 2 and 3. During this movement, the tapered jaws **48** and **50** of the clamping bushing **42** extend over the fork members **24** and **26** of connector **10** to keep the fork members from spreading open, and thus clamp them in the position shown in FIGS. 2–4.

The connector may then be extracted by simply manually gripping the threaded bushing **52** and exerting an axial force on the extraction pin **30** of approximately five pounds in the direction of arrows B in FIGS. 2 and 3.

It is thus seen that the extraction tool of the present invention provides a simple, quick means for extracting a female connector upwardly from any type of mother board assembly without damaging the printed circuit board, the connector, or the surrounding insulation.

Of course, variations of the specific construction and arrangement of the extraction tool disclosed above can be made by those skilled in the art without departing from the invention as defined in the appended claims.

What is claimed is:

1. A device for extracting a forked connector from a mother board assembly, the connector having inwardly extending lobes on the free ends of the forked portion thereof, said device comprising an elongated extraction member, one end portion of which is adapted to be inserted between said lobes, engaging means on said extraction member for engaging said lobes, wherein the distance between said lobes is less than the thickness of said one end portion of said extraction portion, and wherein said engaging means comprises a transverse opening in said extraction member adjacent said one end portion and adapted to receive said lobes, and retaining means carried by said extraction member for retaining said engaging means and said lobes in engagement.

2. The device of claim **1** wherein said end portion of said extraction member is tapered so that, upon insertion of said extraction member between said lobes and movement of said extraction member towards said mother board, said lobes are cammed outwardly.

3. The device of claim **1** including means movably mounted on said extraction member for maintaining said retaining means in an operative position while the connector is being extracted.

4. The device of claim **1** wherein said retaining means comprises a clamping bushing slidably mounted over said extraction member and having a pair of tapered jaws formed on one end thereof and adapted to engage said forked portion to clamp same against said extraction member.

5. The device of claim **4** wherein said clamping bushing is magnetically retained on said extraction member.

6. The device of claim **4** wherein the other end portion of said extraction member is threaded, and further comprising an internally threaded bushing extending over said threaded end portion of said extraction member, said internally threaded bushing being adapted to engage the other end of said clamping bushing to maintain the latter in an operative position.

7. A device for extracting a forked connector from a mother board, the connector having inwardly extending lobes on the free ends of the forked portion thereof, said device comprising an elongated extraction member, one end portion of which is tapered, said extraction member having a transverse opening extending therethrough adjacent said tapered end portion so that upon insertion of said extraction member between said lobes the lobes are cammed apart by said tapered end portion and received in said bore, and a clamping bushing slidably keyed on said extraction member and having a pair of tapered jaws formed on one end thereof and adapted to engage said forked portion to clamp said lobes in said opening.

8. The device of claim **7** wherein the other end portion of said extraction member is threaded and further comprising an internally threaded bushing in threaded engagement with said other end portion of said extraction member, rotation of said threaded bushing relative to said extraction member advancing said threaded bushing into engagement with said clamping bushing to maintain the latter in an operative position.

References Cited

UNITED STATES PATENTS

2,723,694	11/1955	Ross	145—50
2,760,195	8/1956	Berg	29—203
3,087,235	4/1963	Porter	29—206
3,453,713	7/1969	Matteo	29—278X

THOMAS H. EAGER, Primary Examiner

U.S. Cl. X.R.

29—278