United States Patent

Beck

[15] **3,693,791**

[45] **Sept. 26, 1972**

[54] **METHOD OF, AND APPARATUS FOR, SPIRAL AIR CLASSIFICATION OF SOLID PARTICLES IN A GASEOUS CARRIER**

[72] Inventor: **Erich Beck,** Worms-Weinsheim, Germany

[73] Assignee: **Ingenieurbureau Dr. Brehm AG,** Zurich, Switzerland

[22] Filed: **Feb. 6, 1970**

[21] Appl. No.: **9,270**

[52] **U.S. Cl.** **209/144**

[51] **Int. Cl.** **B04c 1/00**

[58] **Field of Search** 209/144

[56] **References Cited**

UNITED STATES PATENTS

3,477,569	11/1969	Klein et al.	209/144
2,694,492	11/1954	Rumpf et al.	209/144
3,001,727	9/1961	Block et al.	209/144 X
2,361,758	10/1944	Fligue	209/144
2,846,151	8/1958	Wehn et al.	209/144 X
2,999,593	9/1961	Stern	209/144
3,433,422	3/1969	Guenther	209/144 X

Primary Examiner—Frank W. Lutter
Assistant Examiner—Ralph J. Hill
Attorney—Werner W. Kleeman

[57] **ABSTRACT**

A multi-stage spiral air classification method and apparatus for dividing into at least three fractions solid particles suspended in a gaseous carrier, in which a spiral flow of additional carrier gas is introduced to the flow of the suspension at the entry into each subsequent stage.

13 Claims, 5 Drawing Figures

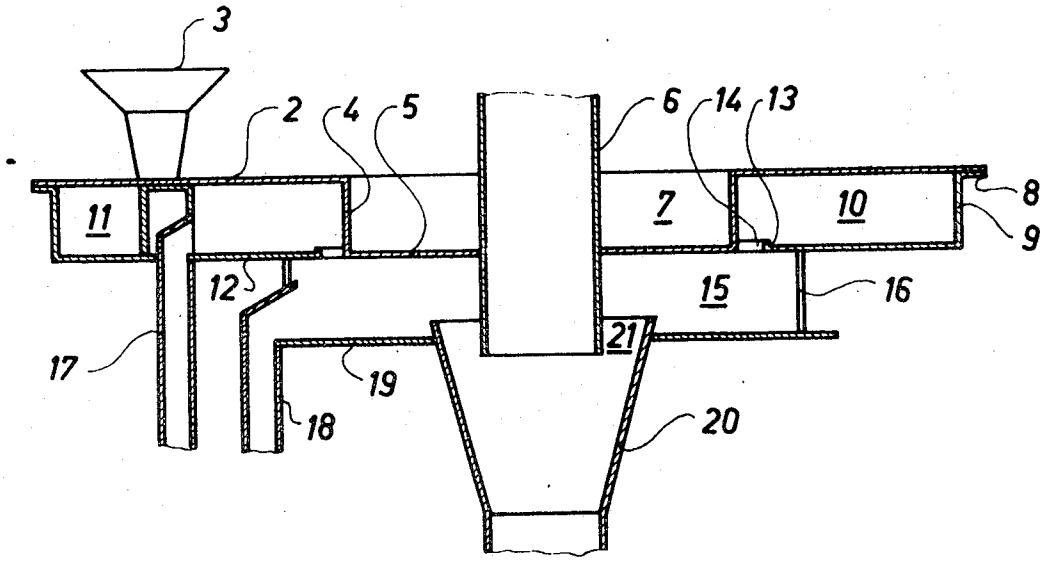

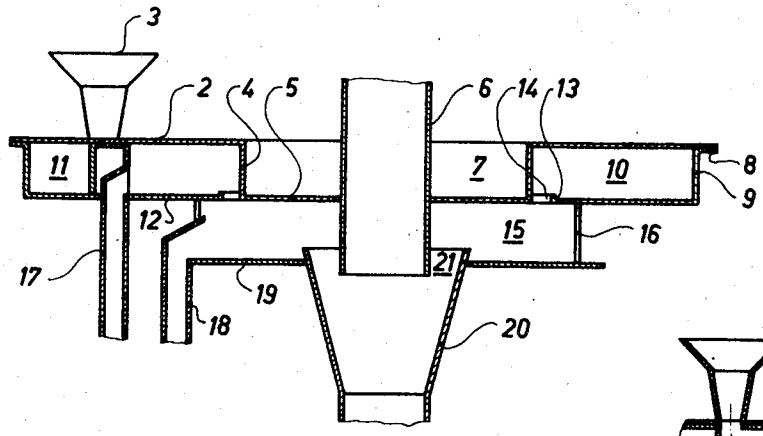

Fig. 1

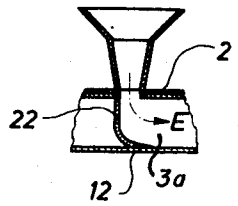

Fig. 2

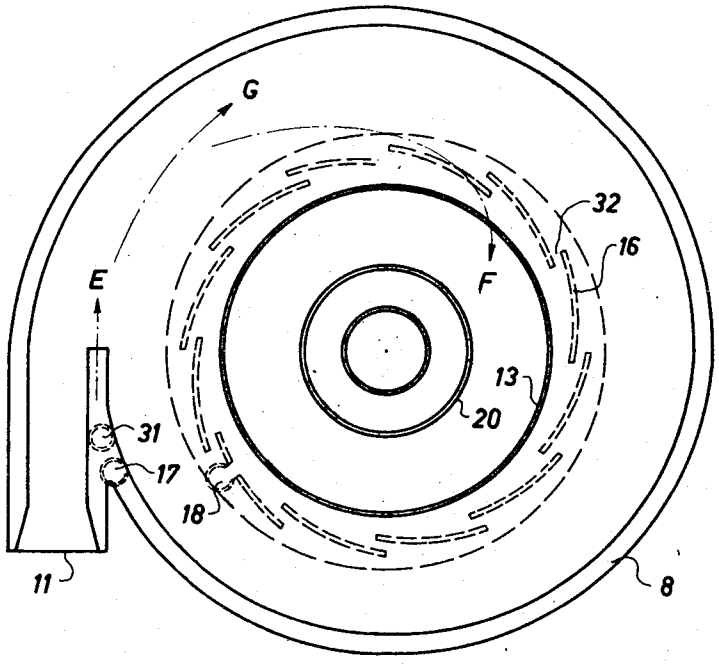

Fig. 3

INVENTOR

ERICH BECK

BY Werner W. Kleiman

ATTORNEY

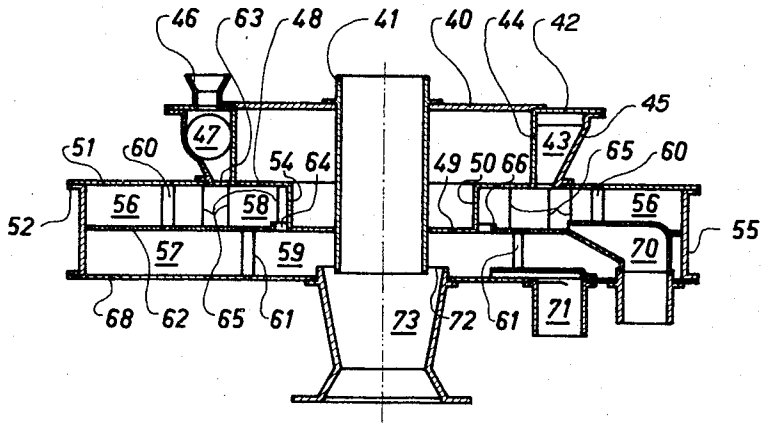

Fig. 4

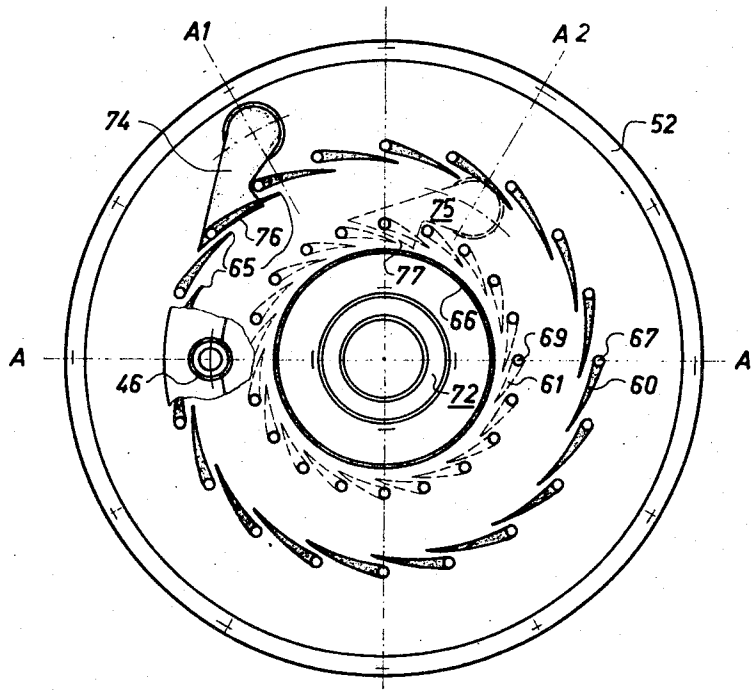

Fig. 5

INVENTOR

ERICH BECK

BY [illegible]

ATTORNEY

METHOD OF, AND APPARATUS FOR, SPIRAL AIR CLASSIFICATION OF SOLID PARTICLES IN A GASEOUS CARRIER

This invention relates to a method of, and apparatus for, spiral air classification of solid particles in a gaseous carrier.

For the classification of very finely divided solids, for example with particle sizes under about 50 microns and down to about 2 microns, screening methods are no longer suitable and for this purpose use is frequently made of so-called air classification processes. In these processes finely divided solids are selectively deposited in a gravitational field with the aid of flowing gaseous media, usually air.

Depending on the mode of operation of the installation or the type of gravitational field, basic distinctions can be made between gravity air classifiers, screw air classifiers, cyclone air classifiers, and spiral air classifiers. In respect of the type of force applied to the particles to be sifted a sharp distinction is not always possible, since in some installations or in some methods, although use is mainly made of the force of gravity, nevertheless a certain rotation or centrifugal force may also be superimposed by suitably guiding the gaseous carrier. In the case of pure spiral air classifiers, the force of gravity plays practically no part, since the centrifugal forces to which the particles to be classified are subjected are here many times greater, for example from ten to one hundred times greater, than the force of gravity. For this reason it is possible to achieve accuracy of separation and throughputs which were quite impossible to obtain with earlier gravity classifiers.

The development of spiral air classifiers is due to a considerable extent to the work of K. Wolf and H. Rumpf, and reference may be made to literature on this subject, for example Chemie-Ingenieur-Technik, 3 (**1952**) **129–135**, "Weiterentwicklung des Spiralwindsichters (Wirbelsichters) (Further development of the spiral air classifier (whirl classifier))" by H. Rumpf and F. Kaiser, and also the passages of literature mentioned in this publication.

The predominant majority of air classifiers introduced and tested industrially up to the present time permit separation of material into only two fractions. It is true that some proposals have already been made for dividing the material into more than two "fractions" by means of air classifiers, but this is not actually a type of classification that can be regarded as fractionation. In the case of genuine fractionation a series of fractions are obtained, that is to say portions of the material which in each case contain practically only constituents of a single particle range and only very few constituents of successive finer fractions. If, for example, a "fraction" consists of 60 – 70 percent of material with particle sizes of over 10 microns and 30 – 40 percent of components from the next finer fraction (also known as "undersize content"), for example with sizes of 3 – 10 microns, it is not possible to speak of fractions or fractionation but only of concentrations of particles of determined size ranges.

Thus, for example, according to an earlier proposal the material introduced into a single annular disc type spiral chamber of an air classifier is split up into more than two portions of different grain sizes, but what is achieved in practice is only a concentration but not fractionation.

Successful attempts to develop a multi-stage spiral air classifier capable of industrial use for sharp fractionation of fine to very fine material have hitherto not been known, apparently because the technical problems occurring in successively carrying out a series of stages of fractionation could not immediately be solved either with respect to the apparatus required or with respect to operational requirements. On the other hand, for the purpose of improving accuracy of separation in the dividing of a material into two fractions it has for a long time been known for two stages of a spiral air classifier to be operated in parallel.

The present invention seeks to provide a spiral air classification method and an apparatus suitable for carrying out this method, for the purpose of dividing a material into three or more proper fractions, while avoiding the disadvantages of the prior art and without incurring unacceptable expense for apparatus or operation.

According therefore to one aspect of the present invention, there is provided a method for the multi-stage spiral air classification of solid material in particle form for the purpose of dividing the material suspended in a gaseous carrier medium into at least three fractions of different particle sizes, said method including separating part of the material as a coarse fraction in each stage, passing the remainder of the material together with the carrier medium into a subsequent stage for further separation of a coarse fraction from the remainder of material, repeating the said separating and passing steps until after the last stage all the material still suspended in the carrier medium is separated practically as a whole, and feeding, at the or each subsequent stage, additional carrier medium in the form of a spiral flow to the flow of material and carrier medium entering said stage.

It has been found that the method set forth above is capable of achieving sharp fractionation without excessive decrease of throughput with very fine separation limits.

The number of fractions which can be obtained by the method set forth above will be seen to be one more than the number of stages in the process.

The current of carrier medium additionally introduced into the stage can without difficulty be superimposed on the current of the material and carrier medium introduced into said stage if, as is generally preferred, the direction of the spiral flow of material and carrier medium is the same as the direction of the spiral flow of the additional carrier medium introduced. In principle however it is also possible to work with counter-current, in which case the direction of the spiral flow is reversed.

The method set forth above is particularly suitable for dividing fine material, with particle sizes in the region from 40 microns down to 2 microns, into a number of sharp fractions, while satisfactorily sharp fractionation, even with a high throughput, can still be achieved particularly in the particle size range below 15 microns, and even below 10 microns.

The finely divided material which can be treated in this manner includes various industrial materials, such as cement, powdered limestone, foamed or foamable quartz, polystyrene, gypsum, etc., that is to say the method is suitable both for processing inorganic or

mineral materials and also organic materials from various sources. The method of the present invention offers particular advantages where economical and technically reliable fractionation of fine material is required, as is the case for example in the abrasives industry, particularly for the production of graduated very fine-grained abrasive powders.

Provided that the material processed has no tendency to produce dust explosions, the gaseous carrier medium used may normally be air. It is however also possible to work with an inert gas, for example nitrogen, with an oxygen content of below about 1 percent, when there is a risk of explosion or of damage being caused to the material by oxygen. In respect of moisture content the carrier medium should correspond to the values usually applied to air classification processes, having regard to the material treated. A dry medium is generally preferred. In order to produce the flow in the various stages, a fan of the exhaust or blower type, with a suitably powerful drive, may be used in the usual manner. When working with air, it is possible to operate with an open or closed circuit for the carrier medium, whereas when working with inert gas only a closed circuit will normally be economically acceptable.

The ratio of fine material to carrier medium in the first and subsequent stages depends on the kind of fine material, its particle shape, and its particle size distribution. Optimum operating values can be determined in individual cases by means of simple tests. The additional supply of carrier medium to the stages following the first stage – or in the preferred embodiment with pre-distribution also to the first stage – is preferably controlled in dependence on the decrease of particle size in each stage, that is to say the more the particle size decreases in a given stage the more additional medium preferably should be introduced into that stage.

In the method of the present invention it is preferable to operate by imparting to the additional carrier medium introduced into a stage a peripheral speed component which is greater than the peripheral speed component of the flow of material and carrier medium introduced in the same direction into that stage.

According to another aspect of the present invention, there is provided a multi-stage spiral air classifier for classifying solid particles suspended in a gaseous carrier medium into at least three fractions of different particle sizes, said classifier including separating means for separating part of the material as a coarse fraction in each stage, means for passing the remainder of the material together with the carrier medium into a subsequent stage for further separation of a coarse fraction from the remainder of the material, and means for feeding, at the or each subsequent stage, additional carrier medium in the form of a spiral flow to the flow of material and carrier medium entering said stage.

The classification stages of the process are generally carried out in classification chambers which are in the form of disc rings or flat cylinders and which hereinbelow will also be referred to as classification chambers or simply as chambers. If a spiral flow is produced in a chamber of this kind, a given point in the flow moves with a speed component in the direction of rotation (peripheral speed component) and with a second speed component inwards in the radial direction. Although the peripheral speed at a given point in a stage of the process will practically always be higher than the speed in the radial direction, the flow effecting passage through the chamber will here be regarded as the main flow, that is to say in the classification chamber the radial direction inwards and, in the transitional region between two parallel adjoining classification chambers, the axial direction towards the downstream side.

The movement sequence made possible by the method of the invention by the serial arrangement of a succession of stages is important to the attainable sharpness of the fractions. If the stages lie in superimposed parallel planes, at the transition from one stage to the next stage it is possible to obtain two changes of direction of the main flow by approximately 90° each, that is to say at the transition from one stage to the next a given particle follows a step-shaped path, viewed radially. In respect of the total flow this means a transition from the spiral movement (in one stage) into a helical movement (in the region of transition to the next following stage), and then again a return to the spiral movement. This deflection, referred to as the "-staircase effect," which in the method of the present invention can be controlled very effectively by the construction of the installation used to carry out the method, probably effects a retention or rebounding of the coarse fraction in a given stage, while the fraction of fine material in this stage passes into the following classification chamber with only a peripheral speed component, and can accordingly pass out with less disturbance on the coarse material side of this following stage.

In order to make the best use of the above-described staircase effect or rebound effect, the transition from material and carrier medium from a preceding classification chamber, preferably in the form of a flat cylinder, into the following classification chamber, preferably likewise in the form of a flat cylinder, may be formed by an annular gap which is disposed coaxially to the appertaining classification chambers. Entry into the first stage and exit from the last stage are however also preferably effected in each case through a coaxial ring gap.

As mentioned above, according to a preferred embodiment, the material to be treated is suspended in the carrier medium before it enters the first stage. This can be effected in an annular chamber into which a jet of the carrier medium is introduced tangentially while the material is fed in corresponding doses into the flow thus produced. If the connection between the predistributor and the classification chamber of the first stage, which is preferably in the form of a flat cylinder, is effected once again through a coaxial ring gap, here again there may be a deflection of the particles of material, that is to say already at the entry into the first stage. Similarly, the outlet from the last stage may be in the form of a coaxial ring gap and may effect a further deflection. The very fine material leaving the last stage can be separated in the usual manner from the carrier medium, for example by means of a cyclone, while any particles not retained by the cyclone can then be filtered out or recycled.

The multi-stage spiral air classifier according to a preferred form of the invention is characterized by at

least two classification spaces or classification chambers which are in the form of annular discs and disposed coaxially one above the other. These classification chambers are in each case connected to one another by an annular opening, which is disposed coaxially to the classification chambers and which forms the outlet aperture for the fine material and the carrier medium of the preceding stage, or the material inlet of the next following stage. At least the second classification chamber and each subsequent classification chamber have at the periphery an inlet for additional carrier medium.

According to a first preferred embodiment, the first classification chamber has no inlet for additional carrier medium, but is fed only with the amount of carrier medium serving to suspend the charge material and with the charge material itself, that is to say in this case the distribution of the charge material in the carrier medium is also effected in the first stage. This classification chamber is preferably of spiral shape, while the second and every following classification chamber is in the form of a flat cylinder.

According to a second preferred embodiment, the spiral air classifier of the invention has an annular predistributor or pre-mixing chamber, which is constructed for introduction of a tangential flow of carrier medium. The charge material is preferably fed or metered into the pre-mixing chamber in such a manner that on entering it, the material is deflected, for example by 90°. The pre-mixing chamber may have its own blower.

In this preferred embodiment with a pre-mixing chamber, the first classification chamber is also provided on its periphery with an inlet for additional carrier medium, so that in this embodiment all classification chambers can be supplied at their peripheries with additional carrier medium. It is advantageous for each inlet for additional carrier medium to be equipped with means of controlling the inflow of carried medium. A simple form of control for the admission of additional carrier medium and for feeding the same spirally into the corresponding classification chamber in the plant or the corresponding stage of the process is provided by a ring of guide blades which is disposed on the periphery of the respective classification chamber, these blades preferably being mounted so as to be adjustable.

Spiral air classifiers according to the invention can be of simple construction, so that maintenance and operation present substantially no problems.

The invention will be described, merely by way of example, with reference to the accompanying drawings, in which:

FIG. 1 illustrates a first preferred embodiment of a spiral air classifier according to the present invention, in longitudinal section and somewhat diagrammatically,

FIG. 2 is a fragmentary sectional view of part of the apparatus shown in FIG. 1,

FIG. 3 is a plan view of part of the apparatus shown in FIG. 1,

FIG. 4 illustrates a second preferred embodiment of the spiral air classifier according to the present invention, in longitudinal section, and

FIG. 5 is a plan view of part of the apparatus shown in FIG. 4.

Referring first to FIGS. 1 to 3, there is shown a two-stage spiral air classifier which consists of a lid resting on a casing. The lid comprises a cover plate 2, which is provided with a hopper 3 for introducing the material to be classified. The hopper 3 leads into a cavity 3*a* which is open in the direction of flow. The cover plate 2 is joined by an annular wall 4 to a bottom plate 5. The wall defines a chamber 7 which is open at the top and through which passes a central outlet pipe 6. The pipe 6 is joined to the lid, that is to say it can be lifted off together with the latter, and is in communication with a suction blower (not illustrated). The lid rests in a fluid-tight manner on a support flange 8 of a bottom wall 9 which constitutes the side boundary of a chamber 10 which is of spiral construction, is in the form of an annular disc and forms a first classification chamber. At 11 an opening is provided for the tangential admission of a carrier medium into the first classification chamber 10. The chamber 10 has a bottom plate 12 which is provided with an annular closure web 13. Together with the side wall 4 this web 13 forms an annular gap 14 coaxial with the central axis of the apparatus, through which fine material and carrier medium can pass out of the first stage, that is to say the chamber 10, into a second stage, that is to say a chamber 15. The chamber 15 is in the form of a flat cylinder and provided at its periphery with a ring of guide blades 16. For the sake of greater clarity only the cross-section of the two blades lying in the same sectional plane is shown.

For the purpose of removing the coarse material from the chamber 10, use is made of a coarse material discharge pipe 17. For the removal of coarse material from the second stage 15, use is made of a coarse material discharge pipe 18. The chamber 15 has a bottom 19 which is penetrated by a hopper-like outlet 20 for very fine material, said outlet widening in the upward direction, as viewed. The very fine material passes through the annular gap 21 into said outlet and thence into a cyclone (not shown) or classification chamber connected thereto.

It should be emphasized that the coarse material discharge pipes 17 and 18 do not lie in the same plane as the hopper 3, although this would appear to be so in FIG. 1. On the contrary, the pipes 17 and 18 are in offset positions, that is to say in FIG. 1 a plurality of sectional planes coincide. The construction of the hopper 3 can be seen more clearly from FIG. 2, in which it is shown how an associated guide plate 22 effects the admission of the charge material into the first classification chamber.

FIG. 3 is a plan view of the bottom part, after removal of the upper part consisting of the cover plate 2, side and bottom walls 4 and 5 respectively, outlet pipe 6 and hopper 3. In this plan view the spiral construction of the classification chamber 10 can be seen, as can the tangentially directed carrier medium admission aperture 11, the support flange 8, an aperture 31 in the hopper 3, the web 13, and the fine material outlet 20. The blades 16, which on the periphery of the classification chamber 15 form a ring of blades, the coarse material discharge pipe 18, and the ends of the bottom plate 19 cannot be seen directly and are therefore shown in broken lines.

The installation illustrated in FIGS. 1 to 3 is operated by drawing a current of carried medium by suction through the opening 11 by the action of the suction

blower (not illustrated) which is connected to the outlet 6. The charge material is introduced simultaneously through the hopper 3, passing into the classification chamber 10 in the direction of the arrow E shown in FIGS. 2 and 3. As indicated by the arrow G (FIG. 3), the coarse fractions of the charge material are guided towards the outer wall 9 of the chamber 10, while the fine material together with the carrier medium passes by way of the web 13 into the classification chamber 15 as indicated by the arrow F (FIG. 3). Under the action of a suction blower, (not shown), additional carrier medium is introduced into this second suction chamber between openings 32 defined between pairs of adjacent blades 16. In this second stage there is once again a separation into coarse material, which is discharged through the discharge pipe 18, and fine material, which passes into the fine material outlet 20. The remaining carrier medium, which may still contain a small residue of fine material, is discharged in an upward direction through the pipe 6.

FIG. 4 is a cross-section of a two-stage spiral air classification apparatus in which the charge material is suspended in the carrier medium before being introduced into the first stage. This apparatus is also constructed of a one-piece lid and a base casing. The lid comprises a top plate 40 through which an outlet pipe 41 passes centrally and which rests on the sides of walls 42 of an annular chamber 43. The annular chamber 43 forms the pre-mixing chamber and is bounded laterally, in the inward radial direction, by an annular wall 44, while its outer boundary is formed by wall 45. A hopper 46 enables charge material to be fed into the pre-mixing chamber 43. A suction opening 47 serves to feed carrier medium in a tangential flow into the pre-mixing chamber 43, which permits uniform distribution of the charge material in the carrier medium before the latter passes out therefrom through a coaxial annular gap 63 into a classification chamber 58 which is in the form of a flat cylinder in the first stage. The removable top part of the installation includes a bottom wall 48 and a lower annular side wall 50, and a lower bottom wall 49.

The detachable upper part of the installation consisting of the above-mentioned parts rests on a cover plate 51, which in turn rests on a support flange 52 of the bottom part. All support connections are made gastight.

The bottom part of the installation remaining after removal of the upper part comprises side walls 55 provided with openings or apertures (not visible in the drawing) through which the carrier medium may pass into chambers 56 and 57. These chambers may be referred to as antechambers for the classification chambers 58 and 59. The classification chambers 58, 59 themselves are in each case bounded on their inner periphery by a ring of blades consisting of a large number of adjustable blades 60 and 61 respectively. In the representation in FIG. 5 the heads 67 and 69 of the blades 60 and 61 can be seen, FIG. 4 being a section on the line A—A of FIG. 5. On each side of the classification chamber 58 three end edges 65 of blades are shown. The corresponding end edges of the blades 61 are not shown in the drawing.

The classification chamber 58 forming the first classification stage and constructed in the form of a flat cylinder is in addition bounded by the bottom wall 62, the wall 48 of the lid, and the side wall 54. Similarly to the arrangement illustrated in FIG. 1, the transition from the first classification chamber 58 to the following classification chamber is formed by an annular gap 64 in a web 66 which closes the bottom 62 inwards in the radial direction. The webs at the bottoms of the classification chambers are usually of considerable importance for sharp fractionation of the material to be classified, and are therefore preferred.

The classification chamber 59 is bounded not only by the ring of adjustable blades 61 but also by a part of the bottom plate 62 of the classification chamber 58, and also by the bottom plate 68, a bottom plate 49 of the lid, and the lowermost portion of the discharge pipe 41.

The adjustability or axial rotatability of the blades 60 and 61 is of importance for the control of the admission of additional carrier medium to the respective classification chambers or stages.

The coarse fractions, which are obtained in each case in the classification chambers 58 and 59, can be introduced through coarse material discharge pipe 70 and 71 respectively into closed receivers (not illustrated). The material leaving the classification chamber 59 as a fine material passes through an annular gap 72 into a cyclone 73. Like the previously-described gap 64, this gap 72 is in each case formed by a part of the removable upper part and a part of the lower part of the installation, and is likewise provided with a web-like edge.

In the cyclone 73 the gaseous carrier medium is separated from the very fine material and passes through the outlet pipe 41, optionally through a filter (not shown) intended to retain cyclone dust, into the open or, in the case of a closed cycle for the gaseous carried medium, passes back into the admission aperture 47 or the antechambers 56 and 57. FIG. 4 does not shown show blower or suction fan.

FIG. 5 shows a plan view, after removal of the upper part, of the installation illustrated in FIG. 4. This ability to dismantle the installation constitutes a preferred feature of the spiral air classifier of the invention, because, as in the embodiment illustrated in FIGS. 1 and 3, on removal of the lid both the classification chambers are practically completely accessible and can be cleaned and serviced in the usual manner.

As can be seen from FIG. 5, in the representation in FIG. 4 the sectional planes A_1 and A_2 have been moved partly into the section plane A for the sake of clarity, in order to show the guiding of the coarse material outlet more effectively. The top parts 74 and 75 of the coarse material outlets 70 and 71 respectively lie in the antechambers 56 and 57 and usually extend to the outer limit of the appertaining classification chamber 58 or 59 respectively. The openings 76 and 77 are not covered by parts of the blades, as would appear to be the case in FIG. 5. On the contrary the blades shown in front of the openings 76 and 77 are provided with corresponding apertures on their lower side, so that the discharge of coarse material is not hindered by the blades.

The installation illustrated in FIGS. 4 and 5 is operated in the following manner: the charge material is metered through the connection 46 into the annular chamber 43, in which it is suspended in the carrier medium introduced tangentially at 47. This premixed

suspension of charge material in the carrier medium passes in a practically helical flow through the gap **63** into the classification chamber **58**, which is fed with additional carrier medium through the wall **55** by way of the antechamber **56**. Under the action of the blades **60** on the periphery of the classification chamber **58**, a spiral flow corresponding to the position of the blades, that is to say the opening between the blades, and the suction or blower power, is formed in the classification chamber **58** and brings about the separation of the first coarse material fraction through the coarse material outlet **70**. The remaining fraction of fine material passes together with the gaseous carrier medium through the gap **64** into the second classification chamber **59**, that is to say the second stage. At the transition from **58** to **59** the staircase effect explained above occurs, that is to say the conversion of the spiral flow into a helical flow and then back into a spiral flow. In the classification chamber **59** the process which occurred in the classification chamber **58** is repeated with the difference that a second, finer fraction of coarse material is discharged through the coarse material outlet **71**. The remaining fraction of fine material passes through the gap **72** into the cyclone **73**, a semi-staircase effect occurring, that is to say the conversion of the spiral flow into a helical flow. The rebound effect is thus also achieved in the second stage.

Preferred embodiments of the air classifier described above with reference to the drawings make it possible to see how installations with more than two classification chambers or stages can be constructed for the purpose of producing a correspondingly larger number of fractions. The constructional principle disclosed above may for example also be applied to three-stage or four-stage classifiers for the production of four and five fractions respectively.

I claim:

1. A method for the multi-stage spiral air classification of solid material in particle form for the purpose of dividing the material suspended in a gaseous carrier medium into at least three fractions of different particle sizes, said method including spirally flowing said suspended material for separating part of the material as a coarse fraction in a first stage, passing the remainder of the material together with the carrier medium into at least one subsequent stage for further spiral separation of a second coarse fraction from the remainder of material, feeding each subsequent stage additional carrier medium in the form of a spiral flow to the flow of material and carrier medium within said stage, and imparting to the additionally introduced carrier medium of said stage a peripheral speed component which is greater than the peripheral speed component of the flow of material and carrier medium introduced in the same direction into said stage.

2. A method as claimed in claim **1** wherein the suspension in the successive stages lie in parallel planes and the material passing together with the carrier medium out of one stage into the next subsequent stage is deflected by approximately 90° when viewed radially out of the direction of the said flow on passing out of the preceding stage.

3. A method as claimed in claim **2** wherein the flow of the suspension passing into the next subsequent stage is deflected again by approximately 90° when viewed radially out of the direction of the main flow in the region of transition between the preceding and the following stage on entering said following stage.

4. A method as claimed in claim **1** wherein the solid material particles are suspended in the carrier medium before being introduced into the first stage proper.

5. A multi-stage spiral air classifier for classifying solid particles suspended in a gaseous carrier medium into at least three fractions of different particle sizes by providing a plurality of stages for separating part of the feed material as a coarse fraction in each stage, said classifier comprising separating means embodying at least two classification chambers disposed coaxially above one another and substantially in the form of annular discs, means for feeding said material and carrier medium into a first chamber, means for collecting a coarse fraction from the periphery of each of said chambers, means to pass material uncollected from said first chamber together with the carrier medium into a subsequent chamber for further separation of a coarse fraction from said material, said pass means comprising an annular opening defined between successive classification chambers for flow communication therebetween, said annular opening being disposed substantially coaxially with regard to said classification chambers providing an outlet aperture for the fine particles and the carrier medium from a first chamber and the material inlet for the successive chamber, and means for feeding at each subsequent stage additional carrier medium in the form of a spiral flow to the flow of material and carrier medium therein, said feeding means comprising an inlet for the additional carrier medium located at the periphery of said subsequent chamber.

6. An air classifier as claimed in claim **5** wherein a cyclone separator for separating the finest fraction from the carrier medium is provided after the last classification chamber.

7. An air classifier as claimed in claim **5** wherein said feed means includes a pre-mixing chamber preceding the first classification chamber, a metering device, a blower, and an annular inlet passage connecting the pre-mixing chamber to the first classification chamber.

8. An air classifier as claimed in claim **5** wherein there are admission control means for the inlet for the additional carrier medium.

9. An air classifier as claimed in claim **5** wherein the air classifier has a multi-part casing and a lid which forms the upper boundary for each classification chamber.

10. An air classifier as claimed in claim **5** wherein each said means for feeding additional carrier medium comprising a ring of guide blades on its periphery.

11. An air classifier as claimed in claim **10** wherein the guide blades are mounted adjustably in the casing.

12. An air classifier as claimed in claim **5** wherein each said subsequent classification chamber is constructed in the form of a flat cylinder.

13. A spiral air classifier as claimed in claim **5** wherein the first classification chamber is constructed in the form of a flat cylinder.

* * * * *