US 20120101564A1

(19) United States

(12) Patent Application Publication

Leanna et al.

(10) Pub. No.: US 2012/0101564 A1

(43) Pub. Date: Apr. 26, 2012

(54) **STENTS WITH ATTACHED LOOPED ENDS**

(75) Inventors: **Gary J. Leanna**, Holden, MA (US); **Paul K. Norton**, Lunenburg, MA (US); **Peter Brady**, Newcastle (IE); **Dean Molloy**, Kilrush Hollymount (IE); **Michael E. Zupkofska**, Rockland, MA (US)

(73) Assignee: **BOSTON SCIENTIFIC SCIMED, INC.**, Maple Grove, MN (US)

(21) Appl. No.: **13/339,756**

(22) Filed: **Dec. 29, 2011**

Related U.S. Application Data

(60) Division of application No. 12/649,843, filed on Dec. 30, 2009, now Pat. No. 8,109,988, which is a continuation of application No. 10/852,495, filed on May 24, 2004, now Pat. No. 7,655,039.

(60) Provisional application No. 60/472,929, filed on May 23, 2003.

Publication Classification

(51) **Int. Cl.**

A61F 2/82 (2006.01)

D04C 1/00 (2006.01)

(52) **U.S. Cl.** **623/1.15**; 87/9

(57) **ABSTRACT**

An open frame prosthesis is formed with looped end terminations at its proximal and distal ends. At one end of the prosthesis, the filaments or strands are welded together in pairs to form strand couplings. A plurality of loop segments are connected to the strand couplings, one loop segment for each pair of adjacent strand couplings. In one version of the prosthesis, strands at the opposite end are bent to form looped ends. In another version, loop segments are connected to pairs of strand couplings at both ends of the prosthesis. The loop segments can be connected to the couplings by welding, fusion bonds, or tubes, which are either crimped or heat shrunk.

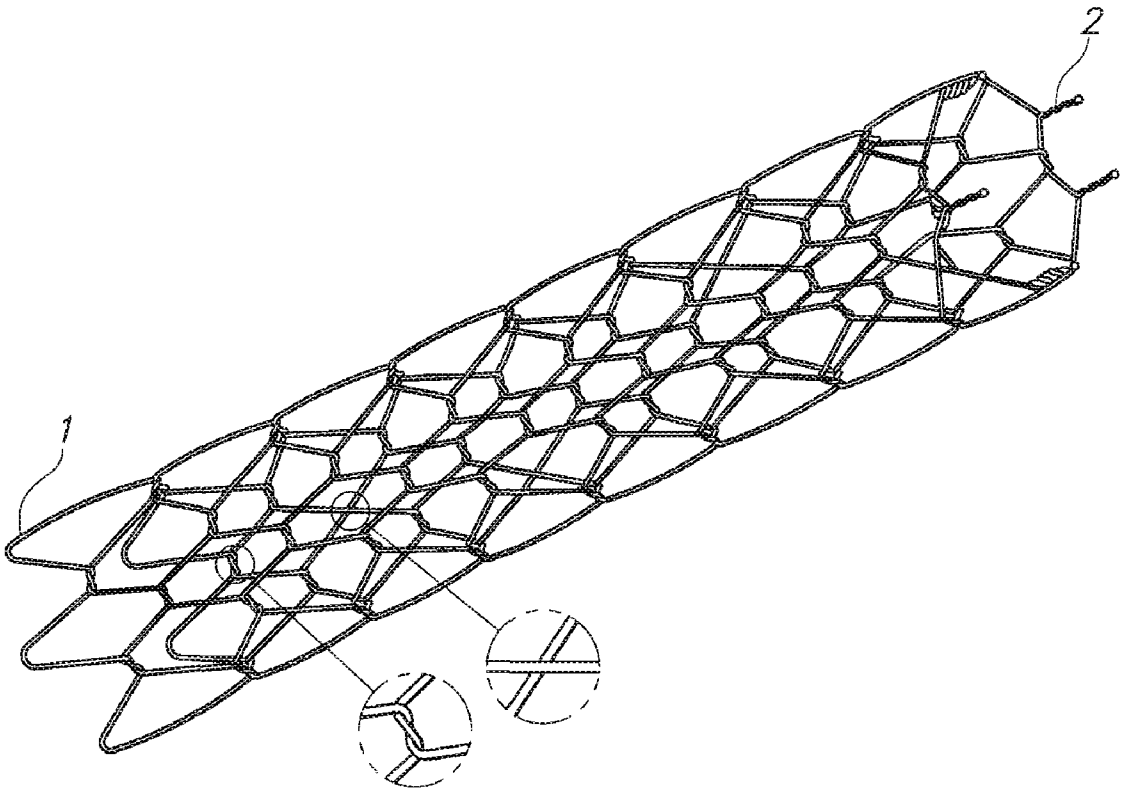

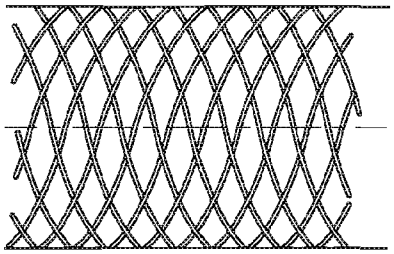

FIG. 1

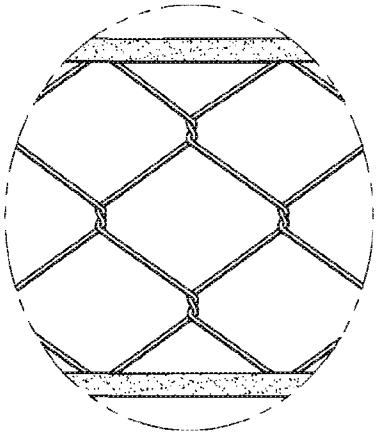

FIG. 2

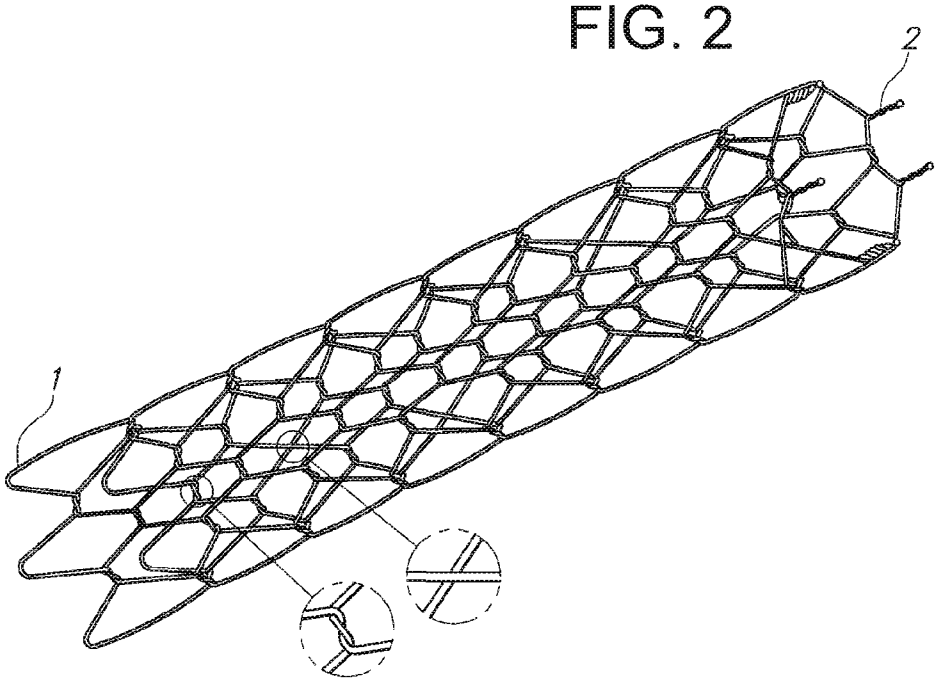

FIG. 3

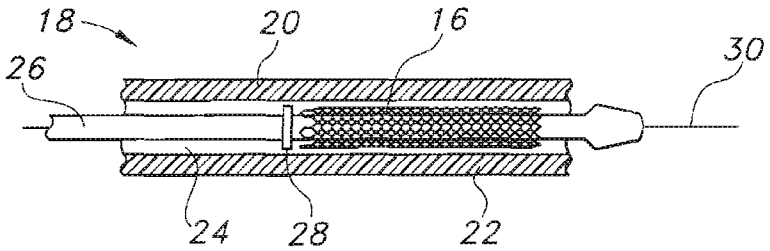

FIG. 4

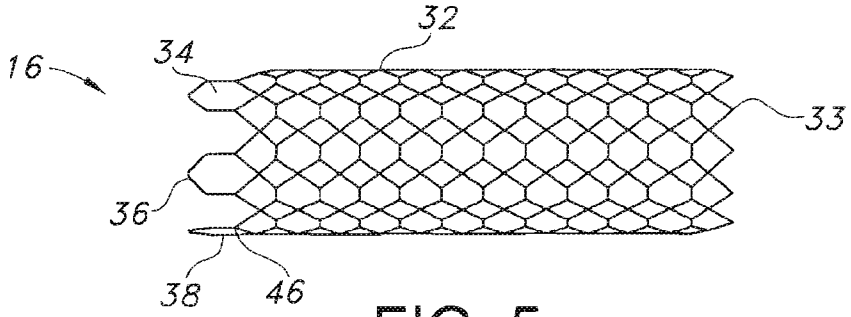

FIG. 5

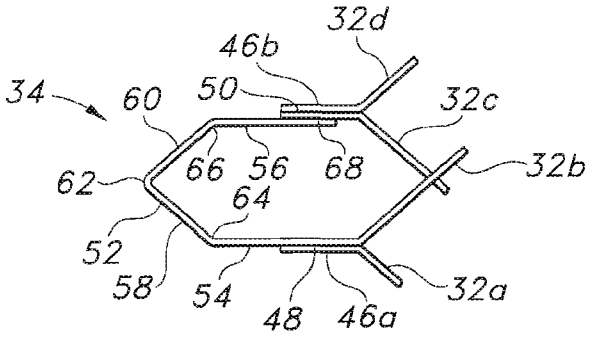

FIG. 6

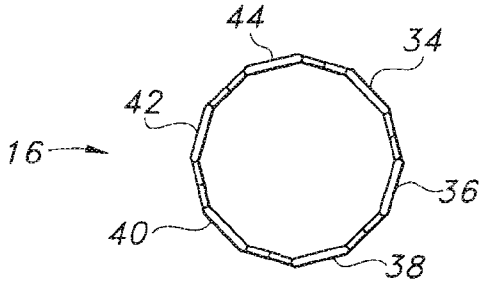

FIG. 7

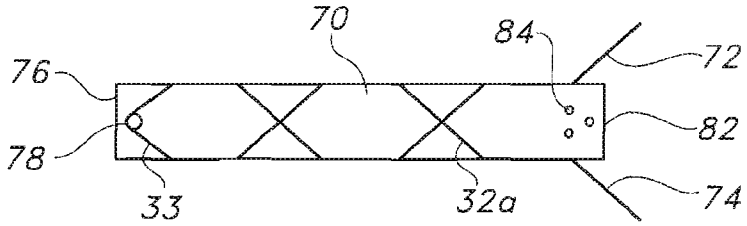

FIG. 8

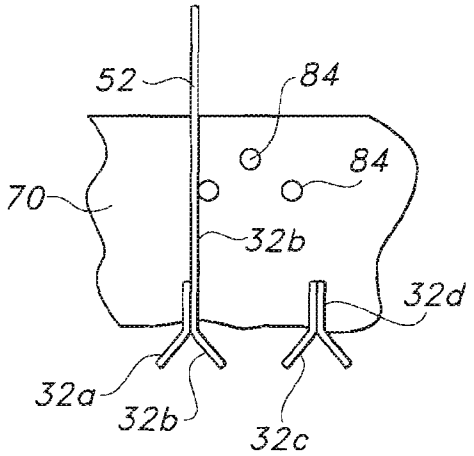

FIG. 9

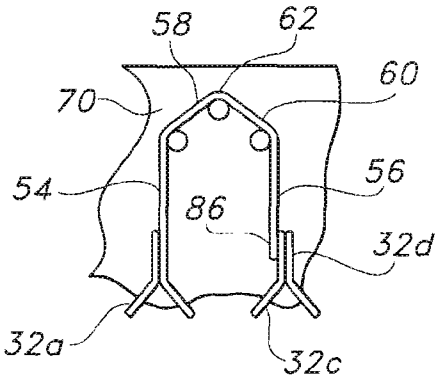

FIG. 10

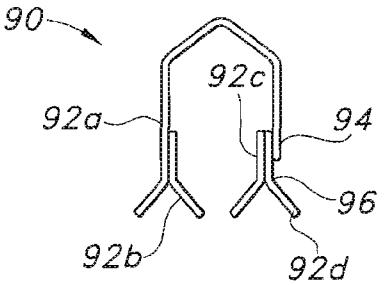

FIG. 11

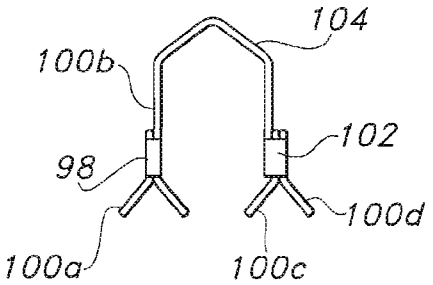

FIG. 12

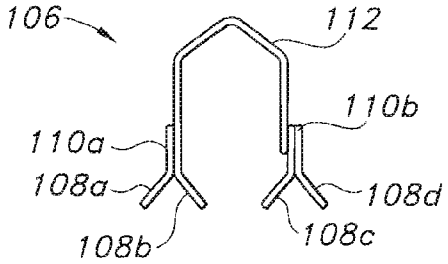

FIG. 13

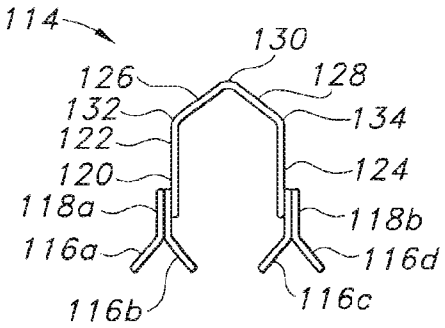

FIG. 14

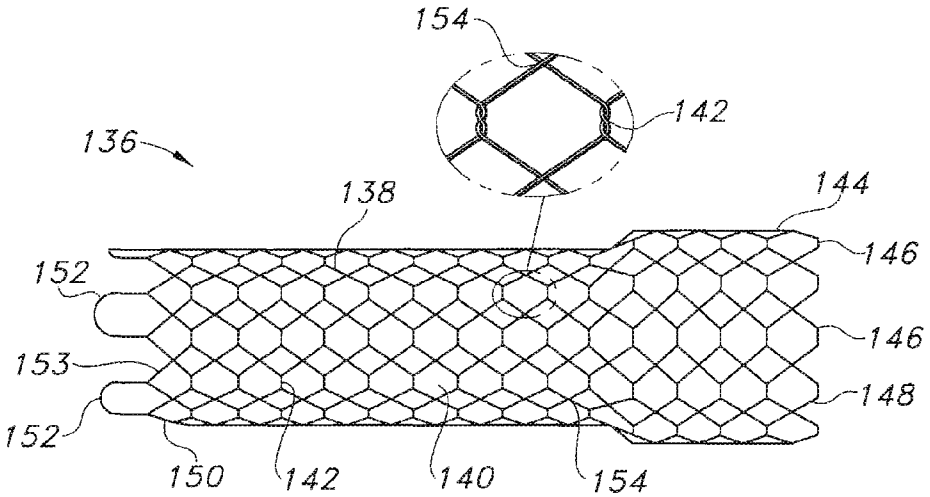

FIG. 15

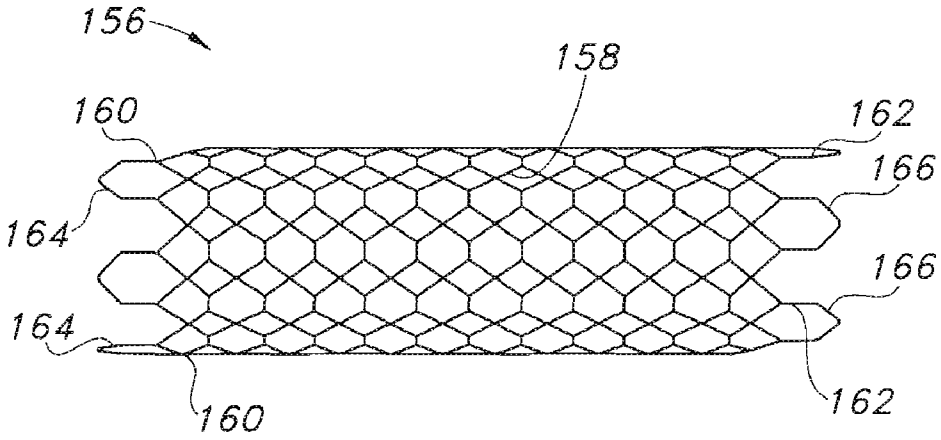
156
158
160
162
166
164
166
164
160
162

FIG. 16

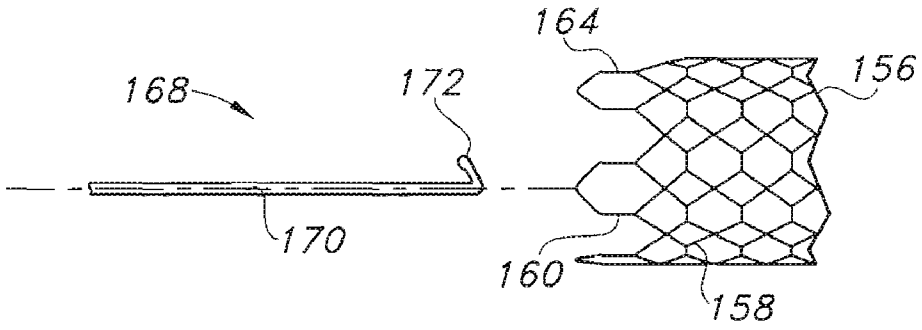
164
156
168
172
170
160
158

FIG. 17

STENTS WITH ATTACHED LOOPED ENDS

CROSS-REFERENCE TO RELATED APPLICATIONS

[0001] This application is a divisional application of U.S. patent application Ser. No. 12/649,843, filed Dec. 30, 2009, which is a continuation of U.S. patent application Ser. No. 10/852,495, filed May 24, 2004, now U.S. Pat. No. 7,655,039, which claims the benefit of U.S. provisional application Ser. No. 60/472,929, entitled "Stents With Welded Looped Ends," filed May 23, 2003, which are all incorporated herein by reference in their entirety.

FIELD OF THE INVENTION

[0002] The present invention relates to stents and other body insertable devices of open frame construction, and more particularly to radially expandable or radially self-expanding prostheses.

BACKGROUND OF THE INVENTION

[0003] A variety of treatment and diagnostic procedures involve the use of devices intraluminally implantable into the body of the patient. Among these devices are stents, such as disclosed in U.S. Pat. No. 4,655,771 (Wallsten). This type of prosthesis, shown in FIG. **1**, is a tubular, braided structure formed of thread elements wound helically in opposite directions. The stent is shown in a relaxed state, i.e. in the configuration assumed when the stent is subject to no external stress. The stent is elastically compressible to a reduced-radius, axially elongated state to facilitate an intraluminal delivery of the stent to an intended treatment site. At the site, the stent is released for radial self-expansion into contact with surrounding tissue, for example a blood vessel wall. The stent does not fully expand, but instead remains under a slight elastic compression, so that an internal elastic restoring force tends to anchor the stent within the vessel, and maintain vessel patency.

[0004] The thread elements, also called strands or filaments, form multiple intersections or crossing points, each including a pair of oppositely directed strands. At each end of the stent, oppositely directed strands are connected in pairs to form end terminations or strand couplings. The strands can be formed of metal, in which case the end terminations can be formed by welding the strands or by twisting the pairs of strands together, preferably augmented with welds. Alternatively, the strands can be formed of polymeric materials, with end terminations formed by fusing the strands or boding them with an adhesive.

[0005] As an alternative to self-expanding stents, a malleable metal such as tantalum can be wound or braided into a plastically deformable prosthesis. This device is capable of maintaining a reduced-radius state on its own to facilitate delivery, but requires a balloon or other implement to expand the prosthesis into contact with surrounding tissue at the treatment site.

[0006] FIG. **2** illustrates part of a prosthesis formed according to an alternative construction in which the strands are wound instead of braided, to form generally hexagonal cells. Adjacent cells have coextensive regions, along which pairs of the strands are wrapped helically about one another. This construction is further illustrated and explained in U.S. Pat. No. 5,800,519 (Sandock).

[0007] FIG. **3** illustrates a prosthesis formed according to another construction, illustrated and discussed in U.S. Pat. No. 6,264,689 (Colgan). Like the stent in FIG. **2**, this stent features structural strands wound to form multiple helical cells. However, it differs from the device of FIG. **2**, in that at some of the junctions of strands, the strands simply cross one another, rather than being twisted helically about one another.

[0008] At a distal end of the prosthesis in FIG. **3**, the strands are bent to form a plurality of loops **1**. These loops form relatively flexible, blunt end terminations, desirable because they more readily adjust to features of the body lumen in which the prosthesis is deployed, and they present minimal risk of injury to the surrounding tissue. Conversely, at the proximal end, pairs of strands are twisted together and ball welded at the ends, to form proximal end terminations **2**.

[0009] The devices in FIGS. **1** and **2** may also be formed with distal and proximal end terminations comprising bends and twisted pairs, respectively. Alternatively, any of these devices may be formed with twisted end terminations at both the proximal and distal ends. As a further alternative, terminations at the proximal end, or at both ends, may be formed by welding the pairs of strands together, without twisting.

[0010] In any event, while these stents are well suited for a variety of procedures, the welded or twisted end terminations are disadvantageous. As compared to the rest of the prosthesis, the welded or twisted end terminations are relatively stiff and rigid, and thus more likely to poke surrounding tissue, rather than bend to accommodate the tissue. Because of the abrupt ends of the welded or twisted end terminations, the poking occasioned by their relative stiffness presents a risk of damage to tissue. Consequently, any positional adjustment of a deployed stent, particularly in the direction that the welded or twisted end terminations extend, is difficult. Another problem encountered with the twisted or welded end terminations is that adjacent twisted wire pairs may interlock when the stent is radially compressed into the delivery state, and then interfere with radial expansion of the stent at a treatment site.

[0011] When the stent or other prosthesis is constructed by bending the strands at its distal end, the situation is improved somewhat by limiting the foregoing difficulties to the proximal side. While they are reduced, these difficulties remain, most notably to prevent any substantial proximal repositioning of a deployed stent. Further, even the looped distal end of such device presents a problem that can limit its use. In particular, radial contraction of the device requires each loop to bend, primarily at its distal apex. The extent of radial reduction is limited by the extent to which each loop can be bent.

[0012] Therefore, it is an object of the present invention to provide a prosthesis of open frame construction with blunt, flexible end terminations at both of its opposite ends, to permit movement of the deployed prosthesis relative to surrounding tissue in either axial direction, with minimal risk of trauma to the tissue.

[0013] Another object is to provide a prosthesis with looped end terminations that permit radial compression of the prosthesis to a smaller diameter for intraluminal delivery.

[0014] A further object is to provide a process for fabricating a stent with the elongate strands or strand segments selectively shaped at one or both ends of the stent to provide relatively blunt and flexible end terminations.

[0015] Yet another object is to provide a stent or other prosthesis that is more readily adjustable and retrievable after its deployment in a blood vessel or other body lumen.

SUMMARY OF THE INVENTION

[0016] To achieve the foregoing objects and others, there is provided an implantable prosthesis. The prosthesis includes a plurality of elongate strands cooperating to form an open-frame tubular structure radially expandable and contractible between an enlarged-radius state and a reduced-radius state. Different ones of the elongate strands are integrally coupled to one another along respective end regions thereof to form a plurality of strand couplings along a selected end of the tubular structure. A closure member is connected to a pair of associated strand couplings, and extends between the associated strand couplings to form a loop segment directed axially outwardly from the associated strand couplings.

[0017] In a preferred arrangement, each of the strand couplings is formed by joining two of the strands along their respective end regions, the strands form an even number of strand couplings, and the number of closure members is equal to one-half the number of strand couplings. Each closure member is connected to a different pair of the couplings; i.e. one end termination loop for every four strand ends.

[0018] For comparison, when the looped end terminations are formed by bending the strands as shown at **1** in FIG. **3**, twice as many looped end terminations are required. Thus, looped end terminations formed according to the invention, although larger than the conventional looped end terminations, permit a similarly sized stent to be radially contracted to a smaller size, due to the lower number of looped end terminations.

[0019] In one advantageous form of the prosthesis, each pair of associated strand couplings includes a first strand coupling in which the ends of the coupled strands substantially coincide, and a second strand coupling in which one of the strands extends beyond the other to provide a strand extension of a predetermined length. The strand extension is selectively shaped and connected to the first strand coupling, preferably by welding, to provide the loop segment.

[0020] Other suitable means for connecting the closure members and strand couplings include fusion bonds, adhesives, and tubes surrounding adjacent portions of the closure member and strand coupling.

[0021] Preferably, each closure member is somewhat U-shaped, comprising opposite legs, each coupled to one of the paired strand couplings, and a medial region between the two legs. The medial region can be shaped to incorporate two inclined side sections and a curved apex between the side sections. As the tubular structure is radially contracted, each closure member tends to bend primarily at the apex, and along regions of slight curvature between the side sections and legs.

[0022] While shown and described primarily with braided and wound tubular structures, end closure members in accordance with the present invention can be employed to enhance virtually any open-frame structure having strand couplings at one of its ends, to render that end more flexible and reduce the risk of trauma to surrounding tissue.

[0023] Another aspect of the invention is a body implantable device, including a plurality of elongate strands wound to form an open-frame tubular body radially expandable and contractible between enlarged-radius and reduced-radius states. At one end of the tubular body, the strands are coupled integrally with respect to one another to form a plurality of strand end couplings arranged circumferentially about the selected end. A plurality of closure members are individually associated with pairs of the strand end couplings. Each closure member is connected to its associated pair of the couplings, and extends from a first one of the couplings to a second one of the couplings to form a loop segment directed axially outwardly from the associated pair.

[0024] Another aspect of the present invention is a process for forming a body implantable device with at least one atraumatic end, including: winding a plurality of elongate structural strands to form an open-frame tubular structure having first and second opposite ends; along a first one of said opposite ends, integrally coupling different ones of the elongate structural strands together along respective end regions thereof to form a plurality of strand couplings, wherein each of the strand couplings includes at least two of the strands; and shaping an elongate strand segment into a loop segment having an arcuate region, and forming a connection of the strand segment with an associated pair of the strand couplings, with the arcuate region disposed axially outwardly of the associated strand couplings.

[0025] Thus in accordance with the present invention, a stent or other open-frame prosthesis is fashioned with flexible, blunt, atraumatic ends, so that after its deployment in a body lumen, the device is movable without the risk of injury to surrounding tissue. As compared to similarly sized devices with conventional looped end construction, devices constructed according to the invention are compressible radially into smaller diameters to facilitate their intraluminal delivery. The looped end terminations described herein can be formed at either end or both ends of stents and other open-frame prostheses.

BRIEF DESCRIPTION OF THE DRAWINGS

[0026] For a further understanding of the above and other features and advantages, reference is made to the following detailed description and to the drawings, in which:

[0027] FIG. **1** is a side view of a conventional braided stent;

[0028] FIGS. **2** and **3** illustrate known alternative open frame prosthesis constructions;

[0029] FIG. **4** is a side view, partially in section, showing a braided stent constructed according to the present invention, contained within a deployment and delivery device;

[0030] FIG. **5** is a side view of the stent of FIG. **4**, in a relaxed state;

[0031] FIG. **6** is an enlarged view of one end of the stent;

[0032] FIG. **7** is a proximal end view of the stent;

[0033] FIGS. **8-10** illustrate several stages in the fabrication of the stent;

[0034] FIGS. **11-15** illustrate end regions of alternative embodiment prostheses;

[0035] FIG. **16** is a side view of a further alternative embodiment prosthesis with welded loops at both ends; and

[0036] FIG. **17** illustrates a component for positionally adjusting or retrieving the stent of FIG. **16** after its deployment.

DETAILED DESCRIPTION OF THE PREFERRED EMBODIMENTS

[0037] Turning now to the drawings, there is shown in FIG. **1** a stent **16** fabricated according to the present invention, and

part of a device **18** used to intraluminally deliver the stent to an intended treatment site and deploy the stent at the treatment site.

[0038] The device includes an elongate, flexible outer catheter **20** having a distal end region **22**, along which the outer catheter surrounds stent **16** and maintains the stent in a reduced-radius, axially elongated delivery state to facilitate an intraluminal delivery of the stent to the treatment site.

[0039] Stent **16** is contained within a lumen **24**, which runs substantially the entire length of the outer catheter. An inner catheter **26**, contained in the lumen, extends lengthwise along the outer catheter and is moveable axially relative to the outer catheter. A deployment member **28** is fixed to inner catheter **26**, proximally of stent **16**. Inner catheter **26** includes a lumen (not shown) to accommodate a guidewire **30**, which is used to guide the inner and outer catheters to the treatment site. When outer catheter **20** is moved proximally relative to inner catheter **26**, the deployment member is encountered by the proximal end of the stent, whereupon further proximal movement of the outer catheter progressively releases the stent from the outer catheter, allowing the stent to radially self-expand into contact with surrounding tissue.

[0040] Stent **16** is composed of oppositely directed helically wound strands or filaments **32** that intersect one another to form multiple intersections or crossing points. Strands **32** are interbraided in a one-over-one-under pattern. At the distal end of stent **16**, strands **32** are bent to form distal end loops **33**. Preferably the strands are formed of a superelastic alloy of titanium and nickel sold under the brand name Nitinol. Other suitable strand materials include cobalt-based alloys such as those sold under the brand names Elgiloy or Phynox, MP35N alloy, and certain stainless steels. Suitable nonmetallic alternatives include polymers, for example polyester and polyethylene terephthalate (PET).

[0041] Strands **32** are resilient, and when maintained as shown in FIG. **1** store an elastic restoring force. When released from outer catheter **20**, stent **16** self-expands under the restoring force, toward a normal or relaxed state shown in FIG. **5** that stent **16** assumes when under no external stress. As a result of its braided construction and helical strand shapes, stent **16** shortens axially as it expands radially. When the deployed in a blood vessel or other body lumen, stent **16** engages surrounding tissue before it expands fully to the relaxed state. Thus, the deployed stent exerts a radially outward force against the tissue that tends to anchor the stent at the treatment site.

[0042] One of the challenges to the physician using device **18** is to accurately place the stent. Accurate placement is made more difficult by the axial shortening of the stent as it enlarges radially. Once the stent is fully deployed, it is contiguous with and frequently partially embedded into the surrounding tissue. As a result, it is difficult to adjust the position of the stent to correct a less than accurate placement. With prostheses constructed as shown in FIGS. **1-3**, proximal stent adjustment is particularly difficult because of the stiff welded and/or twisted strand couplings with abrupt proximal ends that present the risk of injury to tissue.

[0043] In accordance with the present invention, the proximal end of stent **16** is formed with a series of loop segments. Specifically, six loop segments **34-44** are formed in conjunction with twelve strand junctions or couplings **46**. Each loop segment acts as a closure member, cooperating with its associated pair of strand couplings and the coupled strands to form a closed loop end termination. Each loop segment is formed with an extension of one of the coupled strands. For example, FIG. **6** shows a strand junction **46***a* including strands **32***a* and **32***b*, coupled to each other by a weld **48**. Similarly, strands **32***c* and **32***d* are joined by a weld **50** to form a strand junction **46***b*.

[0044] Strand **32***b* is longer than the other strands by a predetermined length, to provide a proximal strand extension or portion **52** extending beyond the other strands, which is shaped to provide loop segment **34**. Loop segment **34** has several discrete elements, including opposed axially extending legs **54** and **56**, opposite inclined linear side sections **58** and **60**, a curved proximal end apex **62**, and a pair of arcuate sections **64** and **66**, each between one of the legs and side sections. A portion of leg **56** is axially aligned with junction **46***b*, and is connected to that coupling by a weld **68**. The remaining loop segments **34-44** are formed in the same manner.

[0045] Stent **16** after deployment can be moved proximally along the body lumen without the risk of trauma to the surrounding tissue. Apex **62** and its counterparts on the other loop segments provide smooth, rounded, blunt proximal end terminations with no tendency to poke or cut into tissue as the stent is moved. Also, the loop segments are considerably more flexible than the strand end junctions, regardless of whether the strands are twisted. This is primarily due to strands **32**, which are bendable about tangential axes both proximally and distally of junctions **46** to carry apex **62** and its counterparts radially inward. This affords a localized (proximal) radial contraction of the stent to facilitate pulling the stent proximally along the lumen while the majority of the stent remains in contact with surrounding tissue.

[0046] Apex **62** further is bendable about radial axes, to bring the legs and side sections closer to one another during radial contraction. Arcuate sections **64** and **66** also are bendable about radial axes, although unlike the apex, they bend in the direction of increasing radii of curvature during radial contraction of the stent. As a result, legs **54** and **56** tend to retain their axial orientation during radial contraction of the stent.

[0047] As illustrated in FIG. **7**, loop segments **34-44** are arranged symmetrically about the proximal end of the stent, equally angularly spaced apart from one another. Radial contraction of stent **16** not only bends each loop segment into a narrower configuration, but also reduces the gaps between adjacent loop segments. The extent of permitted radial contraction is limited by the amount of bending permitted in each loop segment, particularly at the apex. A salient feature of the present invention is the association of single loop segments with pairs of strand junctions, which reduces the number of loops by one-half, as compared to the conventional loops formed by bending the strands at one end of the stent. Thus, the proximal end of stent **16**, as compared to its distal end, is contractible to a smaller diameter.

[0048] Stent **16** is fabricated, first by helically winding strands **32** onto a shaping mandrel **70**. While FIG. **8** shows only one strand **32***a* wound about the mandrel, it is to be appreciated that all of the strands are wound simultaneously onto the mandrel to form the braided structure. From a first end **72**, strand **32***a* is wound helically about mandrel **70** until it approaches a remote end **76** of the mandrel, where the strand is trained about a pin **78** to form one of bends **33**. Then, the strand is wound helically about the mandrel in the opposite direction, to a proximate end **82**. Each strand forms two helical runs or passes over the axial length of the stent. In stent

16, twelve strands form twenty-four such runs. At the proximal end of the mandrel, the ends of the strands form twelve junctions **46**.

[0049] FIG. **9** shows two of the strand junctions, representing four strand ends, disposed on mandrel **70**. Strand **32***b* includes portion **52** extending axially beyond the rest of the strands. Three pins **84** are fixed to the mandrel, axially outwardly of the strand couplings. Extension **52** of strand **32***b* is bent about each of pins **84**. Its free end **86** is positioned against strand **32***c*, then attached to strand **32***c* by welding.

[0050] At this stage, mandrel **70** is placed in an oven (or the mandrel is heated) to a heat the strands to a heat set temperature. The heat set temperature, while much lower than the melting temperature for the strand material, is sufficient to relax the strands such that they are amenable to shaping. When the braided structure cools after heat setting, each strand retains its helical shape, and the strands cooperate to determine the relaxed-state tubular shape of the braided structure. Shape memory alloys such as Nitinol are particularly well suited for this process.

[0051] FIG. **11** is a view similar to that in FIG. **6**, showing part of a stent **90** with an alternative loop forming arrangement in which a strand **92***a* (rather than **92***b*) is longer than the other strands and provides the loop segment. In addition, a free end **94** of strand **92***a* is positioned adjacent strand **92***d*, rather than **92***c*, then welded to a junction **96***b* as before. This can be conveniently considered and "outside-to-outside" connection, as opposed to the "inside-to-inside" connection shown in FIG. **6**. For stents of a given size, outside-to-outside connections form slightly wider loop segments.

[0052] FIG. **12** shows another alternative arrangement in which hypotubes are used in lieu of welds to secure adjacent portions of the strands. The connections for one of the loop segments are formed by sliding a hypotube **98** over strands **100***a* and **10***b*, sliding a hypotube **102** over strands **100***c* and **100***d*, shaping an extension **104** of strand **100***b* and inserting its free end into hypotube **102**, then crimping the hypotubes to provide a friction fit that anchors the strands to one another. The hypotubes preferably are formed of steel.

[0053] In similar alternative arrangements, tubes **98** and **102** can be formed of elastomeric materials and provide a friction fit, augmented with an adhesive if desired. In another alternative, tubes **98** and **102** are heat shrunk onto the adjacent strands.

[0054] FIG. **13** shows part of the proximal end of a polymeric stent **106**, specifically polymeric strands **108***a* and **108***b* forming a junction **110***a*, and polymeric strands **108***c* and **108***d* forming a junction **110***b*. The strand junctions are formed by fusion bonding. In addition, an extension **112** of strand **108***b* is shaped to provide a loop segment, and its free end is connected to strand **108***c*, again by fusion bonding. The fusion bonds are preferably formed simultaneously, although they can be formed serially.

[0055] FIG. **14** illustrates a proximal end region of an alternative stent **114** in which strands **116***a* and **116***b* are welded to form a strand coupling **118***a*, and strands **116** and **116***d* are welded into a strand coupling **118***b*. None of strands **116***a-d* extends axially beyond the others. Thus, none of strands **116** is shaped to provide end closure. Instead, loop closure is provided by a generally U-shaped strand segment **120**. The strand segment includes counterparts to the elements described in connection with loop segment **34***a*, including opposed legs **122** and **124**, side sections **126** and **128**, an apex **130**, and arcuate sections **132** and **134**.

[0056] Strand segment **120** is attached to strand couplings **118***a* and **118***b*, by any of the previously mentioned connecting methods. This approach requires connections at both strand couplings. However, it facilitates using different materials for strands **116** and for strand segments **120** if desired, and also allows attachment of the strand segments to a previously formed stent.

[0057] FIG. **15** illustrates an alternative embodiment open-frame prosthesis **136**, in which elongate strands **138** are wound about a mandrel to form multiple, generally hexagonal cells **140**. As indicated in the enlargement, adjacent cells are joined by coextensive regions **142** along which strands **138** are twisted helically about one another. At a distal end **144** of the prosthesis, the strands are bent to provide loops **146**. A plurality of radiopaque markers **148** are fixed to the loops.

[0058] At a proximal end **150** of the prosthesis, pairs of strands **138** are welded together to form strand couplings. Each pair of adjacent couplings includes one strand with an extended portion shaped into a loop segment **152**, which in turn is welded to the adjacent strand coupling of the pair. Radiopaque markers **153** are fixed near loop segments **152**, and may be fixed to the loop segments. Strands **138** form multiple intersections **154** in addition to coextensive regions **142**. Loop segments **152** can be arcuate as shown, or be shaped to more closely resemble loop segments **34-44**.

[0059] FIG. **16** shows a braided prosthesis **156** formed of two sets of oppositely directed helically wound strands **158**. At both ends of prosthesis **156**, pairs of the strands are welded or otherwise secured together to form proximal end strand couplings **160**, and distal end strand couplings **162**. The prosthesis includes a plurality of proximal end loop segments **164**. Each loop segment **164** is connected to an associated pair of the strand couplings **160**. Prosthesis **156** includes a plurality of distal end loop segments **166**, each coupled to an associated pair of the distal end strand couplings.

[0060] A salient feature of the present invention is that prostheses equipped with loop segments as previously described can be moved axially in either direction after they are deployed, with virtually no risk of trauma to surrounding tissue. FIG. **17** illustrates a proximal end region of prosthesis **156**, and a positioning device **168** spaced apart proximally from the prosthesis. Device **168** includes an elongate flexible shaft **170**, a distal portion of which is shown. A tine **172** at the distal end of shaft **170** extends away from the shaft, inclined proximally and radially outward. When shaft **170** is moved distally to position its distal end in proximate axial alignment with loop segments **164**, the shaft is manipulated to direct tine **172** through one of the loops. Then the shaft is moved proximally to carry tine **172** into engagement with an associated loop segment **164**, whereupon further proximal travel of the shaft pulls prosthesis **156** in the proximal direction.

[0061] Initially, only the proximal region of prosthesis **156** may be pulled proximally, which causes localized axial elongation. The axial elongation radially contracts prosthesis **156** along its proximal end region near the loop segments. This facilitates proximal movement of the prosthesis by pulling the prosthesis radially inward at least slightly away from the surrounding tissue. As device **168** is moved further in the proximal direction, the frictional hold is overcome and the entire prosthesis moves proximally, although a distal portion of the prosthesis may remain engaged with surrounding tissue. This is beneficial, in that the frictional "drag" allows a more incremental, accurate adjustment of prosthesis position.

[0062] For a symmetrical application of the pulling force, device **168** can be replaced with a device with several tines or shafts, to simultaneously pull several, or all, of the loop segments.

[0063] According to another alternative, a tether can be threaded through loop segments **164**, such that proximally pulling the tether brings the loop segments radially inward and closer together in cinch fashion.

[0064] If desired, device **168** or the aforementioned tether can be used not only for incremental proximal adjustments, but for retrieval of prosthesis **156**. To effect distal adjustments in the prosthesis position, a device similar to device **168**, with a tine preferably inclined radially outwardly in the distal direction, could be used to engage one of distal end loop segments **166**.

[0065] While the present invention has been disclosed primarily in connection with self-expanding stents and other open frame prostheses of tubular construction, it is readily apparent that a balloon-expandable prosthesis, or any other bodily insertable device with free wire ends, can be modified with loop segments as described to reduce the risk of trauma to tissue. Also, while the preferred embodiments involve strand couplings formed by joining pairs of strands, such couplings can be formed with three or more strands, then connected in pairs to the loop segments.

[0066] Thus, in accordance with the present invention, loop segments are attached to associated pairs of strand end couplings to reduce the risk of trauma to tissue, and provide a prosthesis that is radially compressible to a smaller diameter to facilitate intraluminal delivery. The looped ends eliminate the potential for adjacent twisted strand pairs to interlock when the prosthesis is compressed to its delivery state, ensuring a more reliable radial expansion of the prosthesis when deployed at the treatment site. The looped ends further facilitate incremental repositioning of the prosthesis after its deployment.

1. A method for forming an atraumatic end in a body implantable device, comprising:

(a) providing a plurality of elongate structural strands;

(b) providing a mandrel having first and second opposed mandrel ends and having pins disposed only at said first and second opposed mandrel ends;

(c) interbraiding the plurality of elongate structural strands between said first and second opposed mandrel ends and between said pins to form an open-frame tubular interbraided structure having first and second opposed ends;

(d) along said second opposed end of said mandrel,

extending one of the elongate structural strands beyond the pins, and

bending the one of the elongate structural strands over the pins to form a loop segment having an arcuate region and opposed axially extending legs;

(e) integrally coupling different ones of the elongate structural strands which have not been bent around the pins at said second opposed end of said mandrel together with the opposed axially extending legs of the one of the elongate structural strand which has been bent around the pins; and

(f) repeating steps (d) and (e) until all ends of said plurality of elongate structural strands are coupled to provide an atraumatic end at said second opposed end of said interbraided structure.

2. The method of claim **1**, further comprising:

bending a portion of each of aid plurality of elongate structural strands around said pins along said second opposed end of said mandrel to provide bends defining an atraumatic end at said first opposed end of said interbraided structure.

3. The method of claim **2**, wherein the number of loop segments at said second opposed end is one half the number of bends at said first opposed end.

4. The method of claim **2**, wherein said tubular interbraided structure consists essentially of said plurality of elongate structural strands.

5. The method of claim **1**, wherein the step integrally coupling the elongate strands comprises welding, fusion bonding, adhesive bonding, or securing with hypotubes.

6. The method of claim **1**, wherein said plurality of elongate structural strands comprise metallic strands.

7. The method of claim **1**, wherein said plurality of elongate structural strands comprise polymeric strands.

8. The method of claim **2**, wherein said plurality of elongate structural strands comprise shape memory strands.

9. The method of claim **2**, wherein said shape memory strands comprise nitinol strands.

10. The method of claim **8**, further comprising:

heat setting the shape memory strands with the interbraided structure being disposed on the mandrel.

11. An implantable prosthesis, comprising:

a plurality of elongate strands interbraided to form an open-frame tubular structure having opposed first and second atraumatic ends;

wherein at said first atraumatic end, all of the strands are bent to form bends;

wherein each end of said elongate strands at said second atraumatic end are coupled to an end of an adjacent elongate strand at said second atraumatic end defining a pair of attached ends; and

a plurality of loop members attached to said elongate strands, each of said plurality of loop members include a pair of ends with a curved loop therebetween;

wherein each of said pair of ends is attached to said pair of attached ends of said elongate strands for attaching said loop members to said tubular structure at said second atraumatic end;

wherein a number of loop members at said second atraumatic end is less than a number of bends at said first atraumatic end.

12. The implantable prosthesis of claim **11**, wherein the number of loop members at said second atraumatic end is one half the number of bends at said first atraumatic end.

13. The implantable prosthesis of claim **11**, wherein said open-frame tubular structure consists essentially of said plurality of elongate strands.

14. The implantable prosthesis of claim **11**, wherein said plurality of elongate structural strands comprise metallic strands.

15. The implantable prosthesis of claim **11**, wherein said plurality of elongate structural strands comprise polymeric strands.

16. The implantable prosthesis of claim **11**, wherein said plurality of elongate structural strands comprise shape memory strands.

17. The implantable prosthesis of claim **16**, wherein said shape memory strands comprise nitinol strands.

* * * * *