F. S. LONG.

CARD INDEX CABINET.

APPLICATION FILED FEB. 5, 1916.

1,207,949. Patented Dec. 12, 1916.

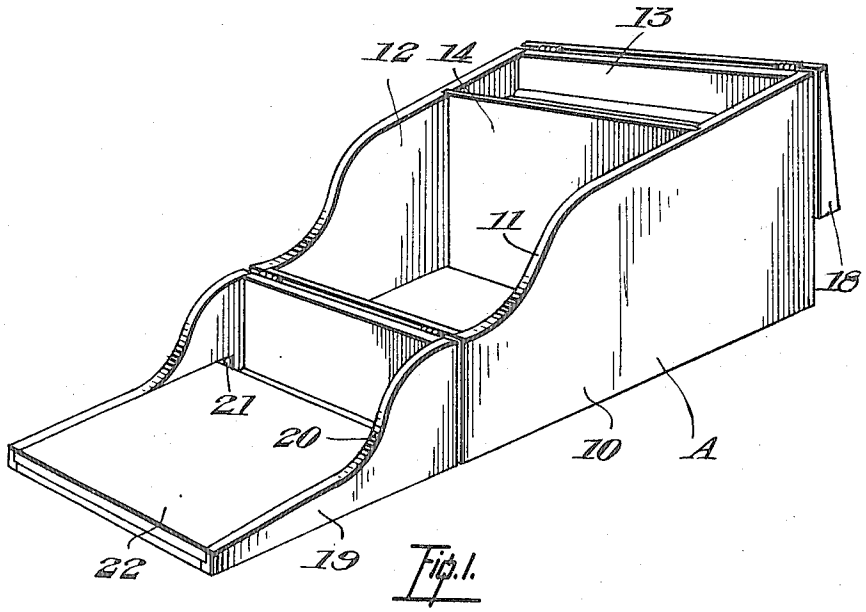

Fig. 1.

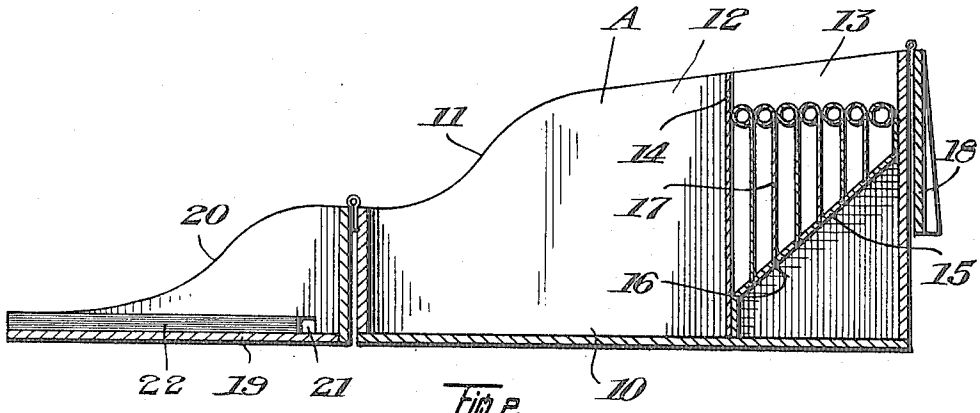

Fig. 2.

WITNESS

INVENTOR
F. S. LONG.

BY Featherstonhaugh & Co.
ATTYS.

THE NORRIS PETERS CO. PHOTO-LITHO., WASHINGTON, D. C.

UNITED STATES PATENT OFFICE.

FREDERICK STANLEY LONG, OF CALGARY, ALBERTA, CANADA.

CARD-INDEX CABINET.

1,207,949. Specification of Letters Patent. Patented Dec. 12, 1916.

Application filed February 5, 1916. Serial No. 76,488.

To all whom it may concern:

Be it known that I, FREDERICK STANLEY LONG, a subject of the King of Great Britain, and resident of Calgary, in the Province of Alberta, Dominion of Canada, have invented certain new and useful Improvements in Card-Index Cabinets, of which the following is the specification.

This invention relates to improvements in card index cabinets and the objects of the invention are to facilitate in bringing to the notice of the user the several appointments and the time when such appointments are due, to permit of a calendar or diary pad being mounted in the cabinet in a manner convenient for refilling or replacing when such is found necessary or desirable, to simplify the construction of the cabinet and generally to adapt it to better perform the functions required of it.

With the above objects in view the invention consists essentially of the improved construction particularly described and set forth in the following specification and accompanying drawings forming part of the same.

In the drawings, Figure 1 is a perspective view of the improved card index cabinet as seen when open. Fig. 2 is a longitudinal section of the same.

Like characters of reference refer to like parts in the several figures.

Referring to the drawings, A represents the improved cabinet comprising the body portion 10 having its side cut away as shown at 11 and subdivided into two compartments 12 and 13 by means of a transversely extending division wall 14. The front compartment 12 is designed to carry index cards therein, while the rear compartment 13 is provided with an angularly disposed bottom 15 having a plurality of notches 16 therein with which the lower ends of the upwardly extending resilient clip members 17 engage. This angularly disposed bottom 15 may be made removable should such be found necessary and constructed of any suitable material, to which the lower end of the resilient clip members 17 may be brazed or otherwise secured, the upper ends of the said members being cylindrical and designed to coact with adjacent members so that they are equidistantly spaced with their tops lying in a substantially horizontal plane.

The lid of the cabinet is preferably made in two portions 18 and 19 opening rearwardly and forwardly respectively, the front portion of the lid having its sides cut away as shown at 20 to coact with the cut away portion 11 of the sides of the body 10. The sides of the lid portion 19 are further formed with grooves 21 with which a pad or calendar 22 slidably engages.

The assembly of the cabinet will be readily understood from the foregoing description.

When the cabinet is in use it is placed on a writing table, the general index cards being located in the compartment 12 and the cards for each day when extracted from the said compartment are located between adjacent resilient clip members 17 so that when the cards for a single day are positioned in this manner they assume a stepped relation relatively to each other and expose the upper portion of the card on which the hour and nature of the appointment is inscribed. It is therefore only necessary to look at the cards located in the compartment 13 to see at a glance the day's appointments and when the same are due. The lower part of the cards may be kept for any notes so that the user will at all times have the necessary information pertaining to any appointment ready to hand.

From this description it will be seen that I have invented a card index which can be advantageously employed both in commercial and professional life and in which the index cards when arranged adequately set forth to the user his appointments.

As many changes could be made in the above construction and many apparently widely different embodiments of my invention, within the scope of the claims, constructed without departing from the spirit or scope thereof it is intended that all matter contained in the accompanying specification and drawings shall be interpreted as illustrative and not in a limiting sense.

What I claim as my invention is:

1. A card index cabinet of the class described provided with a lid formed in two portions opening rearwardly and forwardly respectively, the said cabinet being divided

into a front and rear compartment, an inclined rack in the rear compartment and a plurality of vertically disposed resilient clips operatively supported from the rack and adapted to retain a plurality of index cards in stepped relation relatively to each other, as and for the purpose specified.

2. A card index cabinet of the class described having a lid formed in two portions opening rearwardly and forwardly respectively, the said cabinet being divided into a front and rear compartment, and means located in the rear compartment adapted to hold a plurality of index cards in stepped relation to each other and spaced a distance apart, said means including resilient divisions having their upper edges curled back upon the divisions for spacing the cards apart.

3. A card index cabinet of the class described having a lid, the said cabinet being divided into a front and rear compartment, and means located in the rear compartment adapted to hold a plurality of index cards in stepped relation to each other, said means including resilient walled pockets of decreasing depth from the front of the rear compartment.

4. An index cabinet comprising a front and rear compartment, means associated with the rear compartment adapted to space the cards one from another and maintain them in stepped relation, and a hinged cover adapted to swing downwardly to form a tray at the front of the cabinet.

5. An index cabinet comprising a front and rear compartment, means associated with the rear compartment adapted to space the cards one from another and maintain them in stepped relation, and a cover formed in two hinged portions opening forwardly and rearwardly, one of which is adapted to form a tray at the side of the cabinet.

In witness whereof I have hereunto set my hand in the presence of two witnesses.

FREDERICK STANLEY LONG.

Witnesses:
A. LAMPARD,
E. V. DICK.

Copies of this patent may be obtained for five cents each, by addressing the "Commissioner of Patents, Washington, D. C."