AU9343589

(12) PATENT ABRIDGMENT (11) Document No. AU-B-43589/93
(19) AUSTRALIAN PATENT OFFICE (10) Acceptance No. 677203

(54) Title
APPARATUS AND METHOD FOR INJECTING A PHARMACEUTICAL PREPARATION IN SOLID FORM

International Patent Classification(s)
(51)[5] A61M 005/20
(51)[6] A61D 007/00

(21) Application No. : 43589/93 (22) Application Date : 13.05.93

(87) PCT Publication Number : WO93/23110

(30) Priority Data

(31) Number	(32) Date	(33) Country
9200844	13.05.92	NL THE NETHERLANDS

(43) Publication Date : 13.12.93

(44) Publication Date of Accepted Application : 17.04.97

(71) Applicant(s)
GIJSBERTUS GERARDUS PETRUS VAN DE WIJDEVEN

(72) Inventor(s)
GIJSBERTUS GERARDUS PETRUS VAN DE WIJDEVEN

(74) Attorney or Agent
SHELSTON WATERS , Level 21, 60 Margaret Street, SYDNEY NSW 2000

(56) Prior Art Documents
US 3430626
AU 22762/83 A61D 7/00

(57) Claim

1. A device for injecting a rigid carrier into the body of animals or humans, said device comprising a loading chamber into which the rigid carrier can be introduced, a barrel connecting onto this chamber having a discharge opening at its distal end, means for carrying the carrier by means of gas pressure from the chamber through the barrel out the discharge opening and into the body including means for initiating release of the gas pressure into the barrel via the chamber, and locking means for preventing operation of the device when it is not pressed against a body.

12. A method for injecting a rigid carrier into the body of humans or animals using the apparatus of any one of claims 1 to 11 comprising the steps of:

placing the device against the body such that the locking means are released, and

operating the device, whereby a carrier disposed in the barrel is projected under gas pressure through the discharge end of the barrel and into the body for injecting.

OPI DATE 13/12/93 APPLN. ID 43589/93
AOJP DATE 24/02/94 PCT NUMBER PCT/NL93/00098

AU9343589

(PCT)

(51) International Patent Classification 5 :
A61M 36/00

A1

(11) International Publication Number: WO 93/23110

(43) International Publication Date: 25 November 1993 (25.11.93)

(21) International Application Number: PCT/NL93/00098

(22) International Filing Date: 13 May 1993 (13.05.93)

(30) Priority data:
9200844 13 May 1992 (13.05.92) NL

(71)(72) Applicant and Inventor: VAN DE WIJDEVEN, Gijsbertus, Gerardus, Petrus [NL/NL]; Grotestraat 53, NL-5256 PA Heesbeen (NL).

(74) Agent: EVELEENS MAARSE, Pieter; Arnold & Siedsma, Sweelinckplein 1, NL-2517 GK The Hague (NL).

(81) Designated States: AU, CA, JP, US, European patent (AT, BE, CH, DE, DK, ES, FR, GB, GR, IE, IT, LU, MC, NL, PT, SE).

Published
With international search report.
Before the expiration of the time limit for amending the claims and to be republished in the event of the receipt of amendments.
In English translation (filed in Dutch).

677203

(54) Title: APPARATUS AND METHOD FOR INJECTING A PHARMACEUTICAL PREPARATION IN SOLID FORM

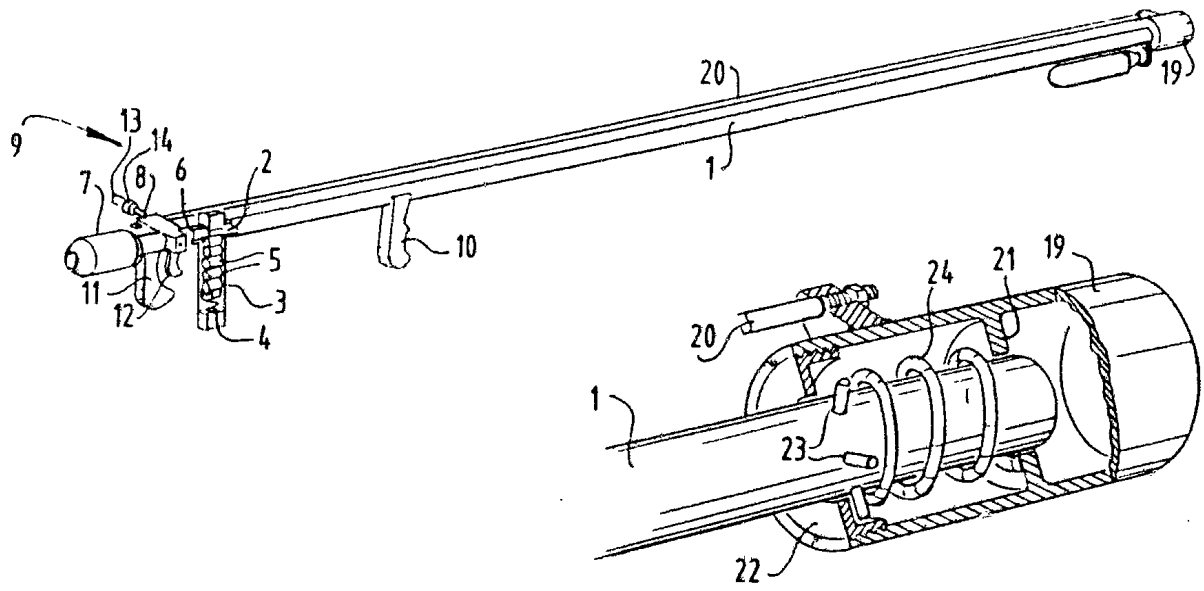

(57) Abstract

The present invention relates to a method and a device for injecting humans and animals with a pharmaceutical preparation, wherein the preparation is held in a rigid carrier (5) and the carrier is carried through the skin into the body by means of gas pressure, and wherein during carrying of a rigid carrier (5) into the body by means of gas pressure the device with which the carrier is carried into the body is held against the body. The invention likewise relates to a device for injecting animals or humans with a pharmaceutical preparation, wherein a chamber (2) is present in which a carrier (5) containing the pharmaceutical preparation can be placed, a barrel (1) connecting onto this chamber and means for carrying the carrier by means of gas pressure through the barrel into the body for injecting, wherein means are present for blocking the use of the device when it is not pressed against a body.

APPARATUS AND METHOD FOR INJECTING A PHARMACEUTICAL PREPARATION IN SOLID FORM

The present invention relates to a method and a device for injecting humans and animals with a pharmaceutical preparation.

Both this method and this device are generally known. Use is made herein of a syringe which is filled with the pharmaceutical preparation in liquid form, whereafter by means of a piston received in the syringe the liquid preparation is injected into the body through a needle pushed through the skin.

This method is used both with humans and with animals.

This method is however beset with the danger that the needle, after being inserted into the body, is contaminated by micro-organisms or viruses present in that body which pass onto the needle of the syringe. When the same needle is used for injecting a following body there is therefore the danger of the following body being contaminated.

While in the case of human applications it is usual to use syringes and needles for once-only use, this does result in cost increases and excessive environmental impact, particularly in the case of prophylactic inoculation on a large scale. This is the case for both human and veterinary applications.

Known from US-A-4 771 757 is a method wherein the preparation is received in a rigid carrier and wherein the carrier is carried through the skin into the body by means of gas pressure.

In this method only the carrier with the pharmaceutical preparation penetrates into the body for injecting so that no instruments or parts thereof penetrate into and are removed from the body for injecting so that the resulting risk of infection is reduced.

This method moreover results in a great speed, which is particularly important when a large number of humans or animals must be injected.

This known method has the drawback that it is only suitable for injecting animals from a distance. This leads to dangerous situations, since the kinetic energy of a "fired" carrier is so great that it can easily cause serious injury.

Another drawback lies in the fact that the accuracy of the location at which the carrier enters the body is low, so that there is a great chance of the carrier entering the body at a less suitable position. Moreover, the kinetic energy of the carrier when it enters the body is strongly dependent on the distance between body and device. At a great distance there is indeed no longer any guarantee that the position of the carrier is still axial when it enters the body; the risk of injury is therefore great.

The invention therefore provides a method which is characterized in that during carrying of a rigid carrier into the body by means of gas pressure the device with which the carrier is carried into the body is held against the body.

In its broadest form the invention provides a device for injecting a rigid carrier into the body of animals or humans, said device comprising a loading chamber into which the rigid carrier can be introduced, a barrel connecting onto this chamber having a discharge opening at its distal end, means for carrying the carrier by means of gas pressure from the chamber through the barrel out the discharge opening and into the body including means for initiating release of the gas pressure into the barrel via the chamber, and locking means for preventing operation of the device when it is not pressed against a body.

It is noted here that it is known to introduce pharmaceutical preparations in the form of a carrier into the body, wherein in general these pharmaceutical preparations release their pharmaceutically active substance slowly. In this known method these carriers are arranged surgically in the body, which of course entails high costs. These surgically arranged carriers often leave behind a remnant which must be removed, once again surgically, or which result in the occurrence of abscesses or infections.

The present invention will be elucidated hereinbelow with reference to the annexed figures, in which:

fig. 1 shows a partly broken away perspective view of a device according to the invention;

fig. 2 shows a partly broken away detail view of the device depicted in fig. 1:

AUSTRALIAN PATENT OFFICE

fig. 3 is a detail view broken away in another manner of the device depicted in fig. 1; and

fig. 4 is a perspective view of a carrier for use in the method according to the invention.

The device depicted in fig. 1 is formed by a barrel 1 in which a chamber 2 is arranged. Situated under chamber 2 is magazine 3 in which a spring 4 is arranged for urging carriers 5 toward the chamber 2. It is also possible to feed the carriers on a belt or on a chain in the manner of a machine gun. Another possibility is formed by the use of an annular magazine in which the carriers are arranged. The side of chamber 2 remote from the barrel 1 is connected by means of a channel 6 to a pressure vessel 7. A closing valve 8 is arranged in channel 6. For handling of the thus formed release device 9 a first hand-grip 10 is fixed to the barrel 1 and a second hand-grip 11 to the channel 6. The closing valve 8 is further connected to a trigger 12. The hand-grips are preferably integrated into the housing.

As a result of the fact that the device is pressed with the barrel against the body for injecting, the required kinetic energy of the carrier is small so that the device with a pressure vessel 7 incorporated therein can inject a large number of carriers.

In order to charge the vessel 7 it is provided with a connection 13 in which can be arranged a reducing valve 14 in order to make adjustable the pressure with which the gases reach chamber 2 and to enable maintaining of this pressure at the adjusted value.

Further arranged on the front side of the barrel 1 is a sleeve 19 which is slidable in axial direction on the barrel 2. Sleeve 19 is connected by means of a rod 20 to the closing valve 8. This is a safety locking device; it is only possible to operate the trigger 12 when the sleeve 19 is pressed rear- ----------

AUSTRALIAN PATENT OFFICE

ward in relation to the barrel 1, so that only when sleeve 19 has been shifted through contact with a body for injecting is it possible to pull the trigger 12 and cause a carrier 5 to move through barrel 1 into the body for injecting.

The construction is shown in more detail in fig. 2. Sleeve 19 is provided with an internal edge 21 with which guiding on the barrel 1 takes place. Further, a ring 22 is screwed on the rear end of sleeve 19, wherein ring 22 likewise provides guiding on the barrel. To prevent the sleeve 19 being removed from the barrel pins 23 are arranged on the barrel. Arranged between pins 23 and ring 21 is a coil spring 24 which ensures that sleeve 19 is retained in its extreme position. Only when the end of barrel 1 is pressed onto the skin of a body for injecting is the sleeve 19 moved rearward counter to the spring action of spring 24 so that the rod 20 is moved to the rear and the trigger 12 can be pulled.

For this purpose a pressure vessel in the form of an aerosol 26 is connected to the barrel 1 by means of a fastening element in the form of a belt 25. Further connected to sleeve 19 is a bracket 27 which rests against the head 28 of the aerosol 26.

Thus is created a mechanism wherein, when the sleeve is pressed in by the body for injecting, the aerosol is activated and a portion of the contents of aerosol 26 is atomized inside sleeve 19. For this purpose the head 28 of the aerosol is connected by means of a flexible hose 29 to the internal edge 21 of the sleeve, in which an opening 30 is arranged through which the hose 29 extends. The contents of the aerosol are formed by a liquid or a gas which has a disinfecting or marking action. In preference both properties are incorporated in the same liquid, for instance tincture of iodine, brilliant green or mercurochrome. It is of course possible to employ other liquids, for instance a mixture of a highly coloured liquid for marking and a liquid with a disinfecting action.

It will be apparent that there are other options for atomizing liquid, for instance a vessel which is pumped up at each stroke of the sleeve relative to the barrel. It is also possible to use the kinetic energy of the carrier to atomize the liquid, for instance by means of the suction occurring after passage of the carrier.

It is of course likewise possible, when the situation lends itself thereto, to make use of either a disinfecting liquid or a marking liquid.

It will be apparent that other embodiments of mechanisms for safety and spraying of marking and/or disinfecting liquid are possible; the above mentioned construction is only one embodiment.

Finally, fig. 4 shows an embodiment of a carrier according to the present invention. The carrier designated in its entirety by 5 is formed by a substantially cylindrical body 30 which is provided on one side with a conical tip 31. The other side of the cylindrical body 30 is flattened. It will be apparent that this shape is suitable for firing as carrier into a body by means of the device depicted in fig. 1, wherein penetration through the skin is facilitated by the conical shape.

It is also possible to apply other carrier shapes. Such a carrier can be manufactured entirely of a pharmaceutically active substance, although it is also possible that the quantity of pharmaceutically active substance is too small to produce such a carrier. In such a situation the carrier is manufactured from a mixture of pharmaceutically active substance and an additive material, or only an additive material with recesses for the pharmaceutically active substance. The additive is of course chosen herein such that the carrier has a sufficient mechanical strength.

It will be apparent that the dimensions of the carrier are subject to the field of application; in human applications a length of several millimetres is envisaged in the first instance. In veterinary applications the dimensions depend of course on the type of animal for injecting; in the

case of pigs or cows is envisaged a carrier with a length of about 1 cm and a diameter of about 2-3 mm.

It is likewise possible to provide the carrier with a cavity 32 and to arrange the pharmaceutically active substance in this cavity.

It is possible to embody the carrier as capsule or to use a sponge-like structure of robust bio-degradable material, in the cavities of which is arranged pharmaceutically active substance.

It is also possible to embody for instance only the tip in a robust bio-degradable material.

It is otherwise possible to select the material of the carrier such that the pharmaceutically active substance is absorbed into the body immediately after injecting. It is also possible that the pharmaceutically active substance is only released slowly.

Use can be made herein of coatings applied round the active substance. It is even possible to use different units of pharmaceutically active substances with different coatings so that the pharmaceutically active substances are released as it were in stages after different periods of time, for instance in the case of different pharmaceutically active substances.

It is attractive to embody the carrier such that it disappears within a determined time, for instance several weeks or even within several hours. In order to achieve this the carrier must consist not only of the pharmaceutically active substance but also of rapidly bio-degradable material. Use is preferably made herein of starch or of mainly starch-containing substances. These are given a form-retaining shape, for instance by injection moulding.

It is of course possible to administer such a rigid carrier in other manner, for instance by means of an operation of other usual means of application.

The above embodiment is suitable for successive injecting with the same pharmaceutical preparation. Other embodiments are conceivable which are suitable for successive

injecting with different preparations and which are provided for this purpose with a magazine in which only one carrier can be placed. It is even possible to use the present invention to inject chips into animals. Herein the chips can be injected directly when they have a suitable form, but they can also be arranged in a carrier of bio-degradable material.

THE CLAIMS DEFINING THE INVENTION ARE AS FOLLOWS:-

1. A device for injecting a rigid carrier into the body of animals or humans, said device comprising a loading chamber into which the rigid carrier can be introduced, a barrel connecting onto this chamber having a discharge opening at its distal end, means for carrying the carrier by means of gas pressure from the chamber through the barrel out the discharge opening and into the body including means for initiating release of the gas pressure into the barrel via the chamber, and locking means for preventing operation of the device when it is not pressed against a body.

2. A device as claimed in claim 1, wherein the means of generating the gas pressure comprises a compressed gas vessel which is connected to the chamber via a closing valve.

3. A device as claimed in claim 1 or 2, wherein on one of its ends the device contains a handle-grip, and on its other end it contains the discharge opening from which the carrier emerges.

4. A device as claimed in any one of claims 1 to 3, wherein at the discharge end of the barrel a locking member is arranged which, when the discharge end of the barrel is pressed onto the body skin, atomizes a liquid, for instance a disinfecting liquid or a highly coloured liquid, or a highly coloured liquid, onto the skin.

5. A device as claimed in any one of claims 1 to 4, including a magazine for the carriers, wherein means are arranged in the magazine for urging the carriers into the chamber.

6. A device according to any one of claims 1 to 5 including a carrier comprising a bio-degradable substance and a pharmaceutically active substance.

7. A device according to any one of claims 1 to 6 including a carrier which is formed such that the pharmaceutically active substance is released slowly from the carrier.

8. A device according to any one of claims 1 to 7 including a carrier which is formed by a rigid hollow shell and that in the shell there is a space for arranging the pharmaceutically active substance.

9. A device according to any one of claims 1 to 8 including a carrier containing mainly starch.

ap

10. A device according to any one of claims 1 to 9 including a carrier manufactured by injection moulding.

11. A device according to any one of claims 1 to 5 including a carrier containing an identification element, for instance a chip.

12. A method for injecting a rigid carrier into the body of humans or animals using the apparatus of any one of claims 1 to 11 comprising the steps of:

placing the device against the body such that the locking means are released, and

operating the device, whereby a carrier disposed in the barrel is projected under gas pressure through the discharge end of the barrel and into the body for injecting.

13. Method as claimed in claim 12, wherein the carrier is carried into the body by means of compressed air.

14. Method as claimed in claim 12 or 13, wherein in one operation with the injecting, the area of the skin where the injection takes place is disinfected.

15. A device for injecting a rigid carrier into the body of humans or animals substantially as herein described with reference to Figures 1 to 4 or Figures 3 and 4 of the accompanying drawings.

16. A method for injecting a rigid carrier into the body of humans or animals substantially as herein described with reference to Figures 1 to 4 or Figures 3 and 4 of the accompanying drawings.

DATED this 16th Day of January, 1997.

GIJSVERTUS GERARDUS PETRUS VAN DE WIJDEVEN

Attorney: CAROLINE M. BOMMER

Fellow Institute of Patent Attorneys of Australia

of SHELSTON WATERS

AUSTRALIAN PATENT OFFICE

43589/93

FIG.1

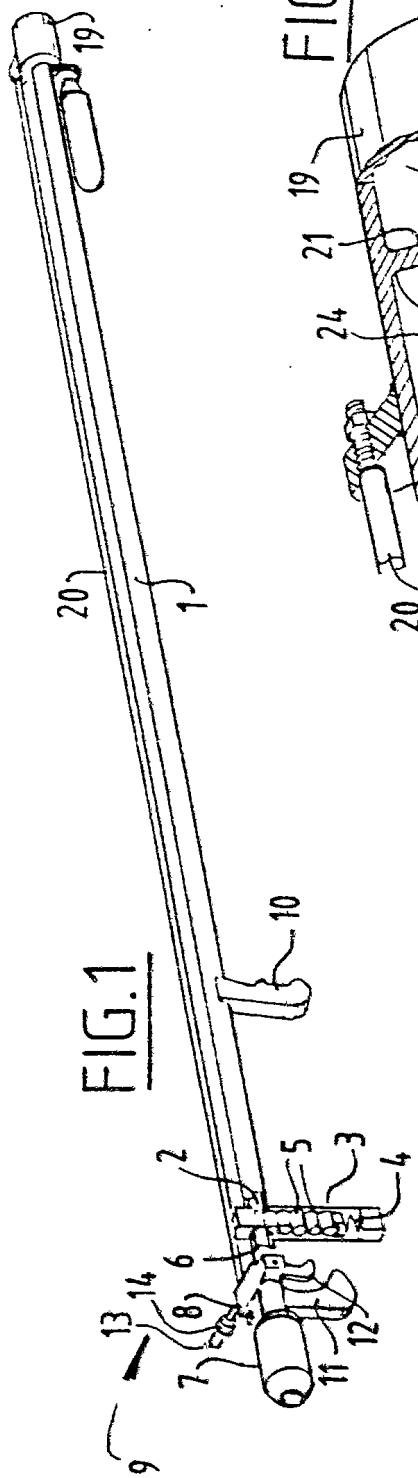

FIG.2

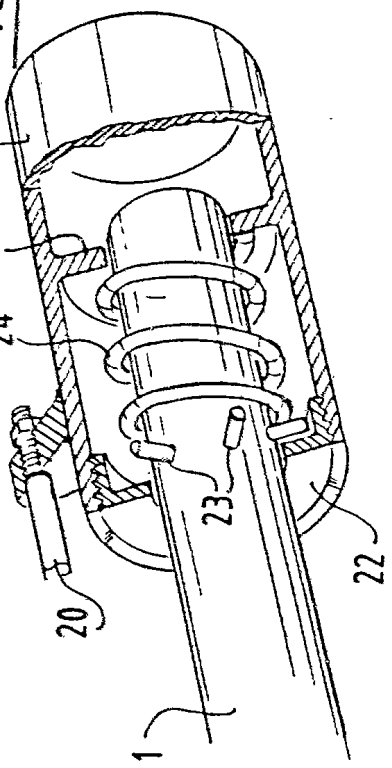

FIG.4

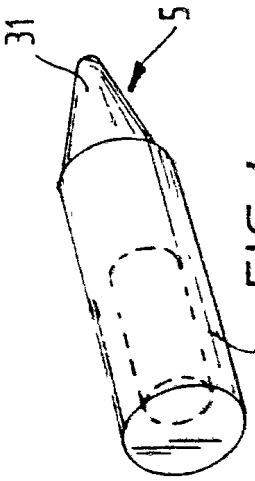

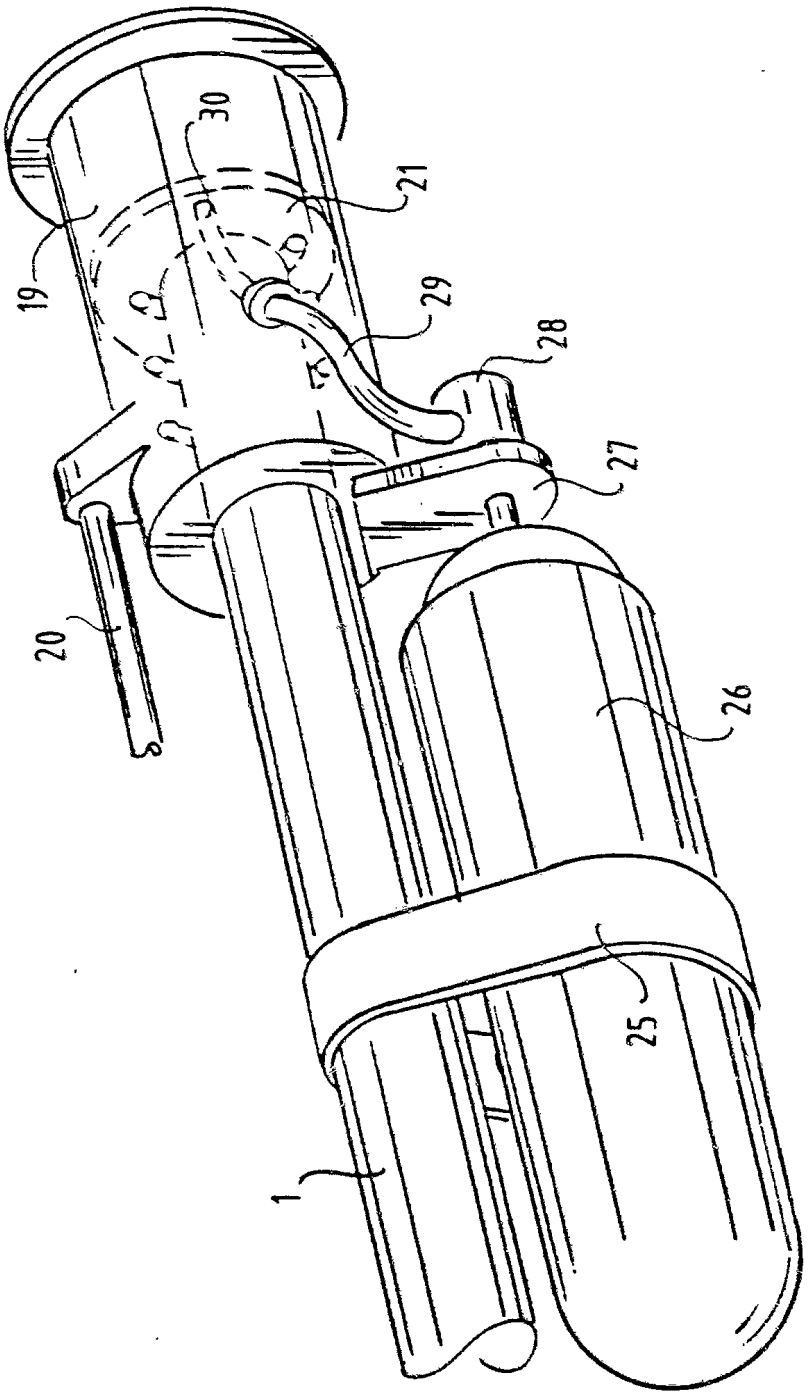

FIG.3

INTERNATIONAL SEARCH REPORT

International Application No PCT/NL 93/00098

I. CLASSIFICATION OF SUBJECT MATTER (if several classification symbols apply, indicate all)[6]

According to International Patent Classification (IPC) or to both National Classification and IPC

Int.Cl. 5 A61M36/00

II. FIELDS SEARCHED

Minimum Documentation Searched[7]

Classification System	Classification Symbols
Int.Cl. 5	A61M ; F41A

Documentation Searched other than Minimum Documentation to the Extent that such Documents are Included in the Fields Searched[8]

III. DOCUMENTS CONSIDERED TO BE RELEVANT[9]

Category °	Citation of Document, [11] with indication, where appropriate, of the relevant passages [12]	Relevant to Claim No.[13]
Y	US,A,4 771 757 (CHEVALIER) 20 September 1988 cited in the application see column 2, line 37 - line 39 see column 4, line 16 - line 27 see column 4, line 37 - line 43 see column 5, line 68; figures 1,4 see column 6, line 3 - line 9	1,2,5,7
A		6,9-14, 17
Y	US,A,3 430 626 (BERGMAN) 4 March 1969 see column 3, line 26 - line 29; figure 5	1,2,5,7

-/--

° Special categories of cited documents : [10]

"A" document defining the general state of the art which is not considered to be of particular relevance

"E" earlier document but published on or after the international filing date

"L" document which may throw doubts on priority claim(s) or which is cited to establish the publication date of another citation or other special reason (as specified)

"O" document referring to an oral disclosure, use, exhibition or other means

"P" document published prior to the international filing date but later than the priority date claimed

"T" later document published after the international filing date or priority date and not in conflict with the application but cited to understand the principle or theory underlying the invention

"X" document of particular relevance; the claimed invention cannot be considered novel or cannot be considered to involve an inventive step

"Y" document of particular relevance; the claimed invention cannot be considered to involve an inventive step when the document is combined with one or more other such documents, such combination being obvious to a person skilled in the art.

"&" document member of the same patent family

IV. CERTIFICATION

Date of the Actual Completion of the International Search	Date of Mailing of this International Search Report
23 SEPTEMBER 1993	08. 10. 93
International Searching Authority	**Signature of Authorized Officer**
EUROPEAN PATENT OFFICE	SEDY R.

III. DOCUMENTS CONSIDERED TO BE RELEVANT (CONTINUED FROM THE SECOND SHEET)

Category °	Citation of Document, with indication, where appropriate, of the relevant passages	Relevant to Claim No.
A	DE,A,3 419 876 (HARMAN) 28 November 1985 see page 6, line 21 - line 23 see page 11, line 30 - line 33 see page 14, line 1 - line 5; figures 2,8	1,2,5, 10-14
A	WO,A,9 202 310 (COMPRITECHNIC PTY. LTD.) 20 February 1992 see page 2, line 23 - line 33 see page 11, line 24 - line 27; figure 7	1,2,5
A	Section Ch, Week 8315, Derwent Publications Ltd., London, GB; Class B07, AN 83-36278K & SU,A,933 101 (TIMOSHIN) 30 December 1977 see abstract	3,4
A	EP,A,0 182 682 (REVEILLON) 28 May 1986 see page 9, line 33 - page 10, line 4; figures 1,3	3,8
A	GB,A,2 174 606 (N. J. PHILLIPS PTY. LIMITED) 12 November 1986 see page 2, line 12 - line 40; figures 2-4	9

ANNEX TO THE INTERNATIONAL SEARCH REPORT ON INTERNATIONAL PATENT APPLICATION NO.

NL 9300098
SA 74790

This annex lists the patent family members relating to the patent documents cited in the above-mentioned international search report. The members are as contained in the European Patent Office EDP file on
The European Patent Office is in no way liable for these particulars which are merely given for the purpose of information. 23/09/93

Patent document cited in search report	Publication date	Patent family member(s)	Publication date
US-A-4771757	20-09-88	AU-A- 1394188	14-09-88
		WO-A- 8806265	25-08-88
US-A-3430626	04-03-69	None	
DE-A-3419876	28-11-85	None	
WO-A-9202310	20-02-92	AU-A- 8333891	02-03-92
		EP-A- 0542840	26-05-93
EP-A-0182682	28-05-86	FR-A- 2571972	25-04-86
		FR-A- 2580179	17-10-86
GB-A-2174606	12-11-86	AU-B- 583372	27-04-89
		AU-A- 5682086	13-11-86
		DE-A- 3615143	06-11-86
		US-A- 4673387	16-06-87