(No Model.) 2 Sheets—Sheet 1.

E. B. COXE.

MECHANICAL MOVEMENT.

No. 419,037. Patented Jan. 7, 1890.

Fig. 1.

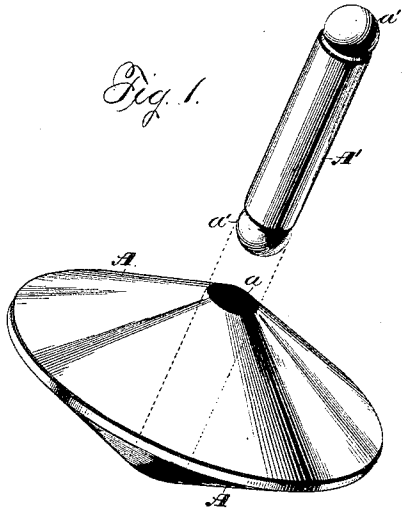

Fig. 2.

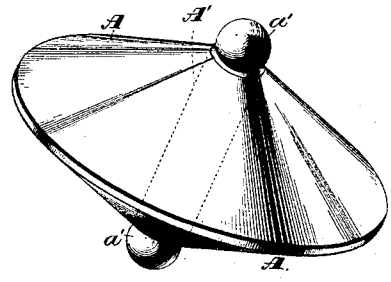

Fig. 3.

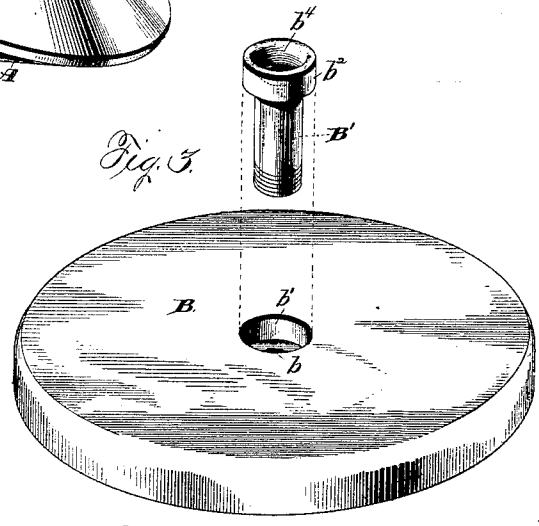

Fig. 4.

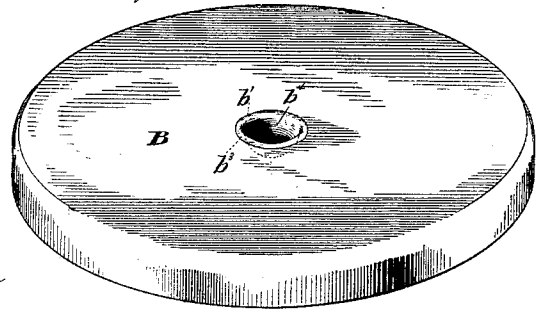

Witnesses
Chas. J. Williamson.
Henry C. Hazard

Inventor
Eckley B. Coxe, by
Pindle and Russell, his Attys

N. PETERS. Photo-Lithographer, Washington, D. C.

(No Model.) 2 Sheets—Sheet 2.

E. B. COXE.

MECHANICAL MOVEMENT.

No. 419,037. Patented Jan. 7, 1890.

Fig. 5.

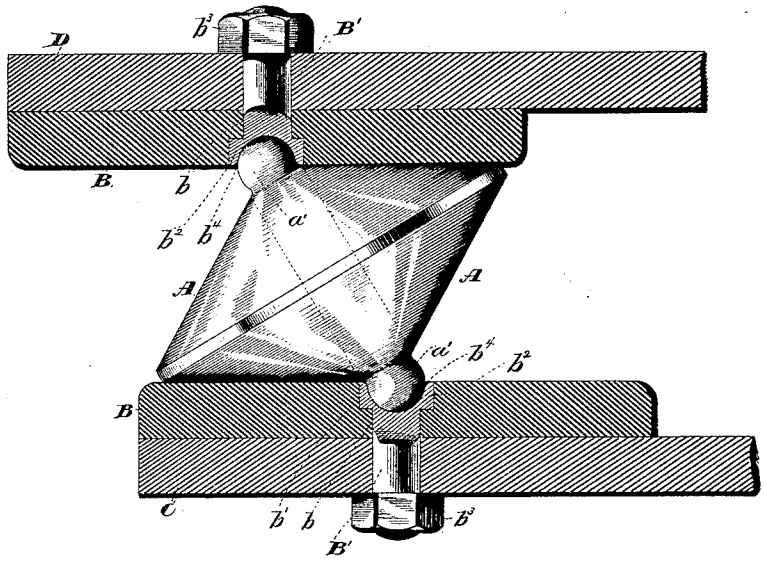

Fig. 6.

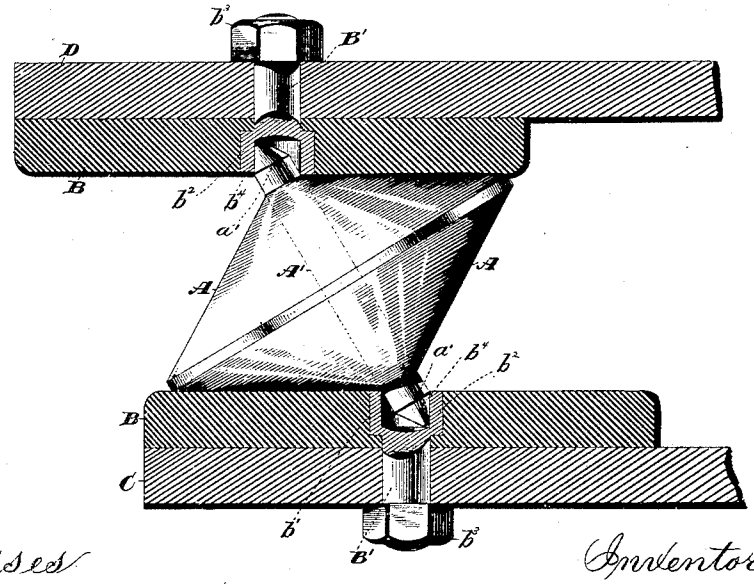

Witnesses
Chas. J. Williamson.
Henry C. Hazard

Inventor
Eckley B. Coxe, by
Crindle & Russell, his Attys

N. PETERS. Photo-Lithographer, Washington, D. C.

UNITED STATES PATENT OFFICE.

ECKLEY B. COXE, OF DRIFTON, PENNSYLVANIA.

MECHANICAL MOVEMENT.

SPECIFICATION forming part of Letters Patent No. 419,037, dated January 7, 1890.

Application filed May 11, 1889. Serial No. 310,440. (No model.)

To all whom it may concern:

Be it known that I, ECKLEY B. COXE, of Drifton, in the county of Luzerne, and in the State of Pennsylvania, have invented certain new and useful Improvements in Mechanical Movements; and I do hereby declare that the following is a full, clear, and exact description thereof, reference being had to the accompanying drawings, in which—

Figure 1 is a perspective view of my roller and the form of separable ends preferably used, said parts being separated from each other. Fig. 2 is a like view of the same as combined. Fig. 3 is a perspective view of one of the bearing-plates and its socket-bolt separated from each other. Fig. 4 is a like view of the same when combined. Fig. 5 is a side elevation, partly in section, of said parts when combined to operate; and Fig. 6 is a like view of a roller having another form of separable end bosses with corresponding bearing-plates for the same.

Letters of like name and kind refer to like parts in each of the figures.

My invention relates to a roller-support for a gyratory part, as shown in Letters Patent No. 369,233, issued August 11, 1887, and has for its object such change in the construction of the same and of its bearings as will insure greater strength and durability and render more easy the placing of said parts in and their removal from position and the repairing of the same when worn; to which end my said invention consists, principally, in the construction and combination of the roller and its axial guide-bosses, substantially as and for the purpose hereinafter specified.

It consists, further, in the construction of the roller-bearings and in the means employed for securing the same to or upon the base and the part to be gyrated, substantially as and for the purpose hereinafter shown.

In the use of the double-cone rollers for gyratory purposes it has been found advantageous to provide one or both ends of each roller A with an axially-arranged boss, which, as shown in Figs. 1, 2, and 5, may have a spherical form, or, as seen in Fig. 6, may have the form of cylinder with a conical end. For the reception of such boss there is provided within the bearing-plate B a centrally-arranged recess that has a plain spherical form, as shown in Figs. 3, 4, and 5, for the reception of the spherical boss, or, as seen in Fig. 6, may have a cylindrical form for the reception of the cylindrical conical boss shown in said figure; but as in either case the bosses operate as guides to hold the roller in position and to prevent displacement a considerable amount of strain is thrown upon them, and they are liable to become worn or broken before the body of the roller in any manner shows any effect from use. To obviate such objections, I construct the body of the roller from cast metal and in and through its axis provide a plain round opening a, and into the same closely fit a steel mandrel A′, which is provided upon its projecting ends with bosses a' and a', that have the desired exterior form, and which, when said mandrel is in place, complete the outlines of said roller and cause it to present the general appearance of a roller constructed wholly from one piece.

The bearings B and B for the rollers have heretofore been secured to or upon a base C, or the part D to be gyrated, by means of bolts which passed through said parts outside of the circle traveled by the roller, while the recesses for the roller-bosses have been formed in and of the same metal as said bearings. In order to secure greater durability for said recesses, and also to furnish a convenient means for fastening the bearings in place, I provide at the center of each bearing B a round axial opening b, that at its upper end is counterbored, so as to form at such point an enlargement b', as shown, and within such opening fit a steel bolt B′, that closely fills the same, and is provided with a head b^2, which fits into and fills the said enlargement b'. The bolt B′ has such length as to enable it to pass through the part C or D, and upon its threaded end is provided with a nut b^3, which operates to draw the bearing B firmly upon the adjacent part and renders other fastening unnecessary. The head b^2 has its upper end conformed to and flush with the face of said bearing, and within the same is formed a recess b^4, which has such size and shape as will adapt it to receive the boss a' of the roller A to be used thereon.

As before stated, the mandrel A′ and bolts B′ and B′ are made of steel, and their engaging ends are preferably hardened, so that the friction and wear between said parts is reduced to a minimum, while great strength is secured. The roller A may be cast in a chill and sufficient accuracy of its bearing-surfaces secured without rendering necessary the turning or grinding of such surfaces, while said mandrel and bolts may be forged or rolled near enough to shape to render but little, if any, dressing of the same necessary.

In consequence of the separate construction of the body of the roller and its axial bosses, a material saving in expense is secured, while the employment of the socket-bolt for securing in place the bearings for said roller materially lessens the original cost and renders more easy the placing in or the removing from position of said bearings.

I do not broadly claim as my invention the idea of providing double-cone rollers with spherical axial bosses, as such is the subject of an application filed by John R. Wagner May 11, 1889, Serial No. 310,451, of which I am the sole assignee.

Having thus described my invention, what I claim is—

1. As an improvement in means for producing gyratory motion in a horizontal plane, a double-cone roller provided at its ends with axial bosses, which are separately formed and afterward combined therewith, substantially as and for the purpose specified.

2. As an improvement in means for producing gyratory motion in a horizontal plane, a double-cone roller which is provided with an axial opening, in combination with a mandrel that is inserted within such opening and has its projecting ends formed into guide-bosses for such roller, substantially as and for the purpose shown.

3. As an improvement in means for producing gyratory motion in a horizontal plane, a bearing-plate which is adapted to receive the travel of a double-cone roller and at its center is provided with an axial opening having an enlarged or counterbored upper end, in combination with a bolt that is fitted into and fills such opening and operates to secure said bearing to or upon a contiguous part, and at or within its upper end is provided with a recess which is adapted to receive and contain an axial boss that is formed upon or secured to the end of said roller, substantially as and for the purpose set forth.

In testimony that I claim the foregoing I have hereunto set my hand this 7th day of May, 1889.

ECKLEY B. COXE.

Witnesses:
HARRY J. DAVIS,
ELLIOTT A. OBERRENDER.