May 17, 1960 A. M. HENKE ET AL 2,936,889

ROTATING THERMAL DIFFUSION UNIT AND PROCESS

Filed March 12, 1956

Fig. 1.

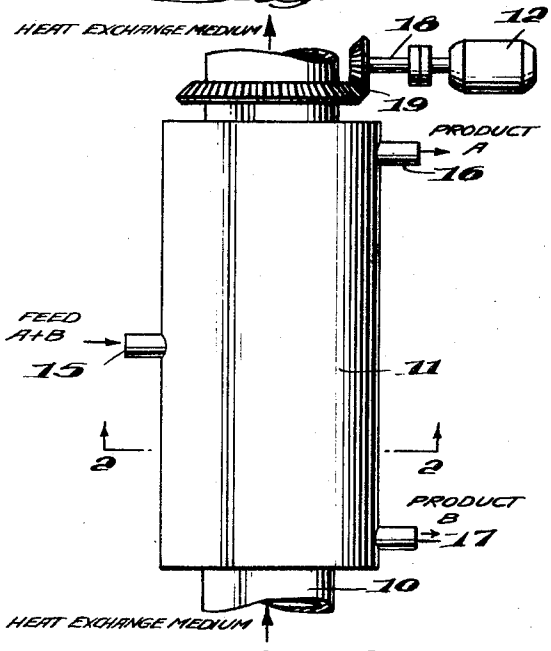

Fig. 2.

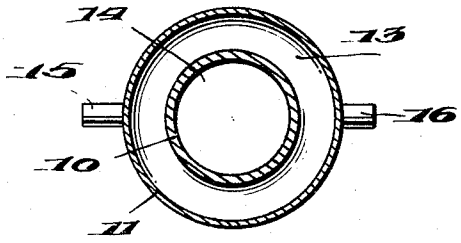

Fig. 3.

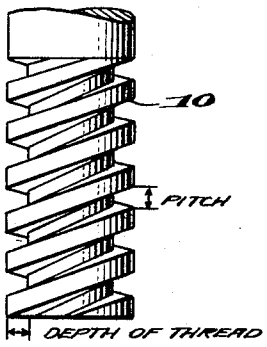

Fig. 4.

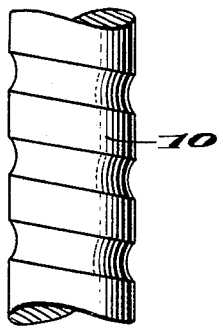

INVENTORS
ALFRED M. HENKE,
HARRY C. STAUFFER,

BY Horace Sheasby

ATTORNEY

United States Patent Office 2,936,889 Patented May 17, 1960

2,936,889

ROTATING THERMAL DIFFUSION UNIT AND PROCESS

Alfred M. Henke, Springdale, and Harry C. Stauffer, Cheswick, Pa., assignors to Gulf Research & Development Company, Pittsburgh, Pa., a corporation of Delaware

Application March 12, 1956, Serial No. 570,884

9 Claims. (Cl. 210—72)

This invention relates to improvements in apparatus for separating the components of liquid mixtures by thermal diffusion.

Thermal diffusion processes permit the separation of some liquid mixtures which are extremely difficult or impossible to separate by other means. In one of such processes a liquid mixture to be separated is passed into a narrow, elongated, vertical annular slit having a transverse temperature gradient created by the application of heat to one annular wall and the removal of heat from the opposite wall, whereby a warmer fraction which is enriched in one component of the mixture rises along the hot wall while a colder fraction which is poorer in that component descends along the opposing cold wall. The warmer fraction is drawn off at the top of the annulus and the colder fraction is removed from the bottom of the annulus. However, while difficultly separable mixtures have been resolved in this manner, the separation requires a considerable period of time which in most instances makes the process unattractive.

The improved apparatus of this invention greatly reduces the time required for thermal diffusion separations. The apparatus is of the annular slit type which is constructed of two concentric cylinders, at least one of which is rotatable, one cylinder serving as a hot wall and the other as a cold wall. In the improved diffusional apparatus of this invention, one or both of the cylinders are provided with such indentations over at least a portion of the surface bordering the annular space between the cylinders as to impart a vertical component of movement to the liquid adjacent said surface upon rotation of an indented cylinder. The rotating indented cylinders impart an upward or downward pump-like movement to the diffusing liquid along the walls, thereby increasing the rate of laminar flow and producing much faster separations than could be obtained with the conventional stationary type of diffusional apparatus.

The thermal convection current which rises in laminar flow along the hot cylinder wall and descends in a like manner along the cold cylinder wall is primarily affected by the dragging or pushing effects imparted by the rotating indented surface or surfaces. The cylinders are rotated so as to drag or push the diffusing molecules without imparting any turbulence to the liquid. Both cylinders may be rotated or one may be rotated while the other remains stationary. If both of the cylinders are rotated, they may rotate in either the same direction or counter to each other at the same or varying rotational speeds, depending upon the design of the indentations on the walls of the cylinders.

The liquid thermal diffusion apparatus of this invention is more particularly described below with reference to the accompanying drawings in which:

Figure 1 shows one embodiment of the apparatus in which the inner cylinder is rotated and the outer cylinder remains stationary.

Figure 2 is a cross-sectional view along the line 2—2 of Figure 1.

Figure 3 shows a portion in elevation of a threaded rotatable inner cylinder.

Figure 4 shows a portion in elevation of a rotatable inner cylinder having a helically ground surface.

In the embodiment shown in Figure 1 inner cylinder **10** is concentrically disposed with respect to outer cylinder **11**. Concentric cylinders **10** and **11** are in a substantially vertical position. Inner cylinder **10** is rotatable by means of motor **12** acting through shaft **18** and gears **19**. As shown in Figure 2, the cylinders **10** and **11** form annular slit or space **13** which serves as the separating chamber for the liquid being resolved into its components. A heat exchange medium is indicated as being circulated through the interior **14** of inner cylinder **10** while cylinder **11** is maintained at its desired temperature by maintaining constant ambient temperature conditions or by enclosing outer cylinder **11** with a jacket (not shown) through which a heat exchange fluid may be circulated. Either inner cylinder **10** or outer cylinder **11** may be maintained as the hot wall while the other is maintained as the cold wall. Feed conduit **15** is provided at any suitable point on outer cylinder **11** and communicates with liquid separation chamber **13** while conduits **16** and **17** located at the upper and lower portions respectively of cylinder **11** are provided for withdrawing the warmer and colder fractions of the liquid.

Figures 3 and 4 show specific embodiments of indentations that can be employed in the apparatus. The outer periphery of rotatable inner cylinder **10** which is in contact with the diffusing liquid is threaded as shown in Figure 3 or is helically ground as shown in Figure 4. Figure 3 indicates the pitch and depth of a threaded surface of inner cylinder **10**. The pitch of the threads should be between about 50 and 500 threads per inch of cylinder. The depth of the thread is preferably between 0.001 and 0.010 inch. When the apparatus is to be used in continuous operation the depth of the thread should be chosen so that the minimum overall slit width of the unit, that is, the annular space between inner and outer cylinders, is not below 0.02 inch and the maximum slit width is not greater than 0.06 inch. In batch operations employing rotating threaded elements, the slit width is designed for the desired degree of separation for a given mixture, generally within the range of 0.01 to 0.04 inch.

In carrying out the separation of a liquid mixture comprising components A and B, the mixture to be resolved is charged through feed conduit **15** to annular slit **13**. A transverse temperature gradient is established between inner cylinder wall **10** and outer cylinder wall **11** by circulating a heating fluid through conduit **14** and at the same time maintaining lower ambient temperature conditions around outer wall **11**. The temperature gradient established between hot wall **10** and cold wall **11**, which are in contact with the liquid being resolved, induces natural thermal diffusion currents in the liquid and a stream which is richer in component A rises along hot wall **10** while a stream which is richer in component B descends along cold wall **11**. The inner cylinder **10** having either a threaded or helically ground surface in contact with the diffusing fluid, is rotated by means of motor **12** in a direction which induces a cumulative effect on the natural thermal movement of the liquid. If a threaded inner cylinder as is shown in Figure 3 is employed, rotation should be in a counter clockwise direction. If the helix as shown in Figure 4 is employed, rotation should be clockwise. The rotational speed of the helical or threaded cylinder will depend upon the mixture being resolved, but in all cases should be sufficient to accomplish a pumping effect which supplements the thermal laminar movement of the fluid while causing a minimum of turbulence to retard the movement of the diffusing liquid. The fraction which is richer in component A is withdrawn from

the upper portion of separating chamber 13 through discharge conduit 16 and the fraction richer in component B is removed from the lower portion of the chamber through discharge conduit 17. For a given degree of separation, the employment of a rotating indented wall permits a greatly increased throughout as compared with the conventional stationary type of thermal diffusion apparatus.

In the embodiment heretofore described, the inner cylinder is rotated and the outer cylinder is stationary. In another embodiment, the inner cylinder is stationary while the outer cylinder is rotated. Still another embodiment encompasses the simultaneous rotation of both cylinders. The indented cylinders are rotated so as to create an upward drag along the hot wall and a dawnward drag along the cold wall. In the embodiment where both the inner and outer cylinders are rotated this effect may be accomplished by rotating the cylinders in either the same direction or counter to each other at the same or varying rotational speeds depending upon the design of the pitch and depth of the threads on the respective surfaces. Various screw designs may be employed to effect a desired flow pattern. For example, the pitch or depth of the threads may vary at various levels of the annulus. A greater pitch or depth of thread may be desirable nearer the feed inlet than at the product drawoff. Also, it may be desirable in some instances for each surface in a given unit to have a different pitch and depth of thread or to thread and rotate only one of the surfaces. The apparatus is not limited to surfaces having standard threads. A helically ground surface as shown in Figure 4 on one or both of the cylinders when rotated also tends to drag along the diffusing molecules.

Separations by continuous thermal diffusion are governed by such factors as feed rate, temperature level, magnitude of the temperature gradient existing between the walls, slit width, the ratio of product withdrawal, and the relative shapes of the molecules present in the mixtures. The temperatures which are employed in a process are, of course, limited by the nature of the stock being processed. In any embodiment of this invention either the inner or outer wall may be the hot wall, the other being the cold wall. The hot wall temperature should not exceed the boiling or cracking temperature of the material being separated, and the cold wall temperature should not be so low as to impede the flow. Low boiling materials may be processed under pressure. Increasing the magnitude of the temperature gradient increases the driving force across the slit. This results in larger separations per unit time.

In a typical apparatus according to the invention, useful in the production of a mineral lubricating oil having a viscosity index of 140 as the overhead product from the liquid thermal diffusion of an SAE 10 lubricating oil having a viscosity index of 105, the annular space or slit width between the concentric cylinders described is 0.031 inch and is 12 feet in length. The inner cylinder is rotated at a speed of 200 r.p.m. and is provided with threads having a pitch of 100 threads per inch, the depth of the threads being 0.003 inch. The inner cylinder is the cold wall and is maintained at 135° F., and the outer cylinder is the hot wall and is maintained at 340° F. The charge is fed at the rate of 150 ml. per hour and the products are withdrawn from the top and bottom of the apparatus in equal volumes.

In both batch or continuous liquid thermal diffusion processes the time required for attaining equilibrium is considerably reduced by employing indented rotating cylinders, thereby permitting either a greater throughput for a given degree of separation or, if desired, improving the degree of separation for the same throughput.

Various changes and modifications may be made without departing from the spirit of the invention and the scope thereof as defined in the following claims:

We claim:

1. A thermal diffusion apparatus for separating the constituents of a liquid mixture comprising an inner substantially vertical cylinder, an outer cylinder concentrically disposed with respect to said inner cylinder and extending for at least a portion of the length thereof to form an elongated, narrow annular space, the bottom of said annular space being enclosed, conduit means for charging a liquid mixture to said annular space, means for the withdrawal of a product of said separation, and means for maintaining a transverse temperature gradient across said annular space, at least one of said concentric cylinders being so indented over at least a portion of its surface bordering said anuular space as to impart a vertical component of movement to the liquid adjacent said surface upon rotation thereof, and said cylinder being equipped with means for such rotation.

2. A thermal diffusion apparatus for separating the constituents of a liquid mixture comprising an inner substantially vertical cylinder, an outer cylinder concentrically disposed with respect to said inner cylinder and extending for at least a portion of the length thereof to form an elongated, narrow annular space, the bottom of said annular space being enclosed, at least one of said cylinders being rotatable, conduit means for charging a liquid mixture to said annular space, means for the withdrawal of a product of said separation, means for maintaining a transverse temperature gradient across said annular space, at least one of said concentric cylinders being threaded over at least a portion of its surface bordering said annular space, and means for rotating at least one of said rotatable cylinders.

3. A thermal diffusion apparatus for separating the constituents of a liquid mixture comprising an inner substantially vertical cylinder, an outer cylinder concentrically disposed with respect to said inner cylinder and extending for at least a portion of the length thereof to form an elongated, narrow annular space, the bottom of said annular space being enclosed, at least one of said cylinders being rotatable, conduit means for charging a liquid mixture to said annular space, means for the withdrawal of a product of said separation, means for maintaining a transverse temperature gradient across said annular space, at least one of said concentric cylinders being helically ground over at least a portion of its surface bordering said annular space, and means for rotating at least one of said rotatable cylinders.

4. A thermal diffusion apparatus for separating the constituents of a liquid mixture comprising an inner substantially vertical rotatable cylinder, an outer stationary cylinder concentrically disposed with respect to said inner cylinder and extending for at least a portion of the length thereof to form an elongated, narrow annular space, the bottom of said annular space being enclosed, the surface of said inner cylinder bordering said annular space being threaded, conduit means for charging a liquid mixture to said annular space, means for the withdrawal of a product of said separation, means for maintaining a transverse temperature gradient across said annular space, and means for rotating said inner cylinder.

5. A thermal diffusion apparatus for separating the constituents of a liquid mixture comprising an inner substantially vertical cylinder, an outer cylinder concentrically disposed with respect to said inner cylinder and extending for at least a portion of the length thereof to form an elongated, narrow annular space, the bottom of said annular space being enclosed, the width of said annular space being between 0.01 and 0.06 inch, conduit means for charging a liquid mixture to said annular space, means for the withdrawal of a product of said separation, means for maintaining a transverse temperature gradient across said annular space, at least one of said concentric cylinders being rotatable and helically ground over at least a portion of the surface bordering said annular space.

6. A thermal diffusion apparatus for separating the

constituents of a liquid mixture comprising an inner substantially vertical cylinder, an outer cylinder concentrically disposed with respect to said inner cylinder and extending for at least a portion of the length thereof to form an elongated, annular space, the bottom of said annular space being enclosed, the width of said annular space being between 0.01 and 0.06 inch, conduit means for charging a liquid mixture to said annular space, means for the withdrawal of a product of said separation, means for maintaining a transverse temperature gradient across said annular space, at least one of said concentric cylinders being rotatable and threaded over at least a portion of the surface bordering said annular space, the depth of said threads being between 0.001 and 0.010 inch and the pitch of said threads being between 50 and 500 threads per inch of cylinder.

7. In a thermal diffusion apparatus for separating the constituents of a liquid mixture having an inner substantially vertical cylinder, an outer cylinder concentrically disposed with respect to said inner cylinder and extending for at least a portion of the length thereof to form an elongated, narrow annular space, the bottom of said annular space being enclosed, conduit means for charging a liquid mixture to said annular space, means for the withdrawal of a product of said separation, and means for maintaining a transverse temperature gradient across said annular space, the improvement comprising at least one of said concentric cylinders being rotatable and helically indented over at least a portion of the surface bordering said annular space so as to impart a vertical component or movement to the liquid adjacent said space upon rotation thereof.

8. In a thermal diffusion apparatus for separating the constituents of a liquid mixture having an inner substantially vertical cylinder, an outer cylinder concentrically disposed with respect to said inner cylinder and extending for at least a portion of the length thereof to form an elongated, narrow annular space, the bottom of said annular space being enclosed, conduit means for charging a liquid mixture to said annular space, means for the withdrawal of a product of said separation, and means for maintaining a transverse temperature gradient across said annular space, the improvement comprising at least one of said concentric cylinders being rotatable and threaded over at least a portion of the surface bordering said annular space so as to impart a vertical component or movement to the liquid adjacent said space upon rotation thereof.

9. A process for separating the constituents of a mixture by thermal diffusion comprising charging said mixture to a vertical annular space, applying a transverse temperature gradient across said annular space, mechanically urging said liquid in said annular space in a continuously helical path and withdrawing the products of said separation from said annular space.

References Cited in the file of this patent

UNITED STATES PATENTS

1,001,661	Macklind	Aug. 29, 1911
1,284,074	Du Pont	Nov. 5, 1918
1,747,155	Birdsall	Feb. 18, 1930
2,096,728	Bighouse	Oct. 26, 1937
2,439,463	Gebauer	Apr. 13, 1948
2,743,014	Frazier	Apr. 24, 1956