J. McLARTY.

LOGGING TRUCK.

APPLICATION FILED SEPT. 3, 1921.

1,436,999.

Patented Nov. 28, 1922.

4 SHEETS—SHEET 1.

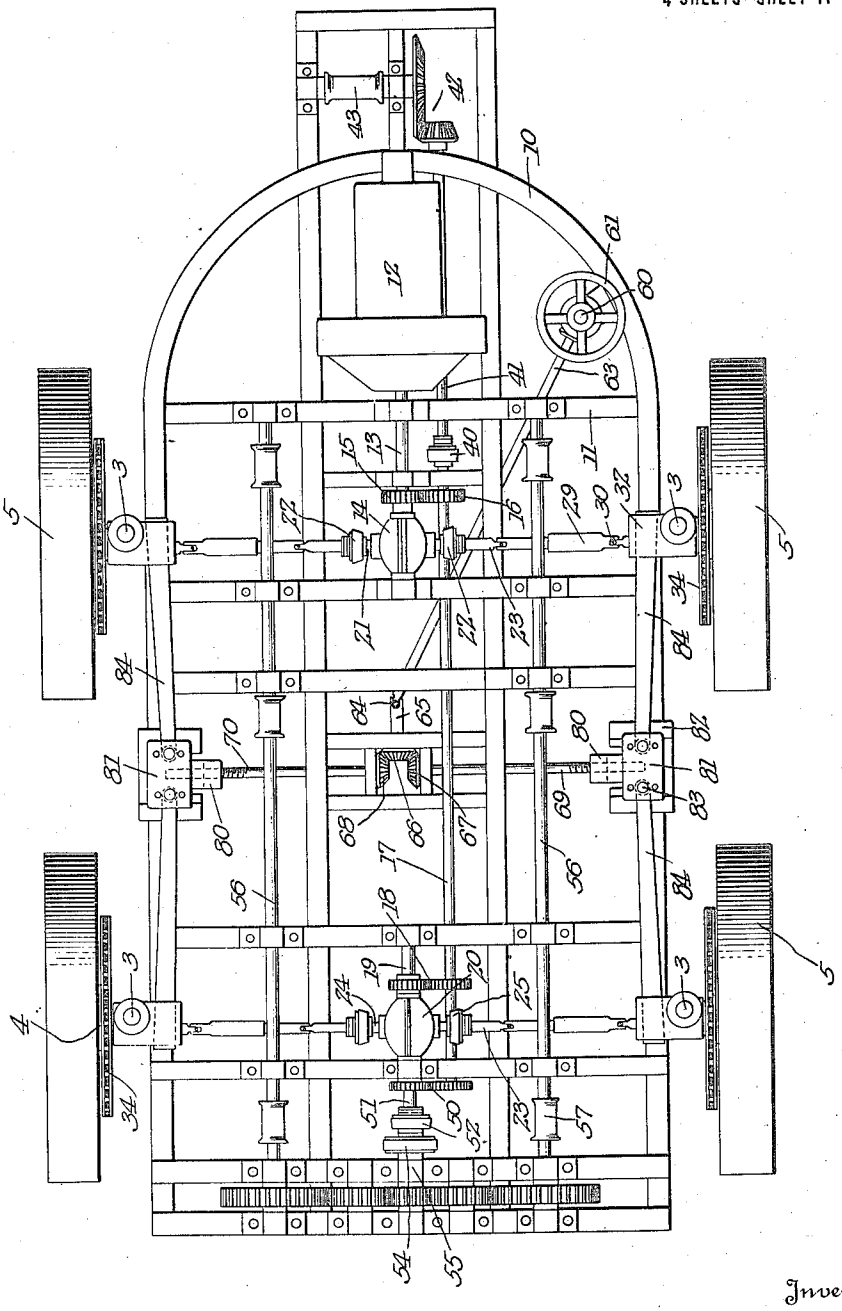

FIG. 1.

Inventor

John McLarty.

By Victor J. Evans

Attorney

Thomas E. Turpin

J. McLARTY.

LOGGING TRUCK.

APPLICATION FILED SEPT. 3, 1921.

1,436,999.

Patented Nov. 28, 1922.

4 SHEETS—SHEET 2.

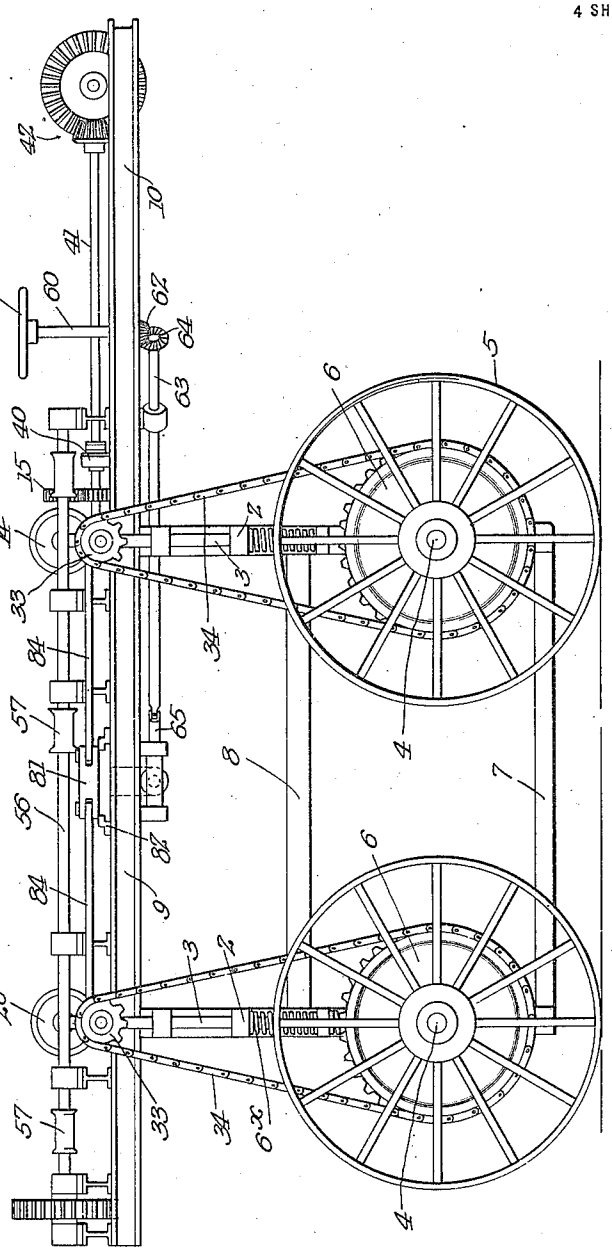

FIG. 2.

Inventor

John McLarty.

By Victor J. Evans

Attorney

Thomas E. Tuttle

J. McLARTY.

LOGGING TRUCK.

APPLICATION FILED SEPT. 3, 1921.

1,436,999.

Patented Nov. 28, 1922.

4 SHEETS—SHEET 3.

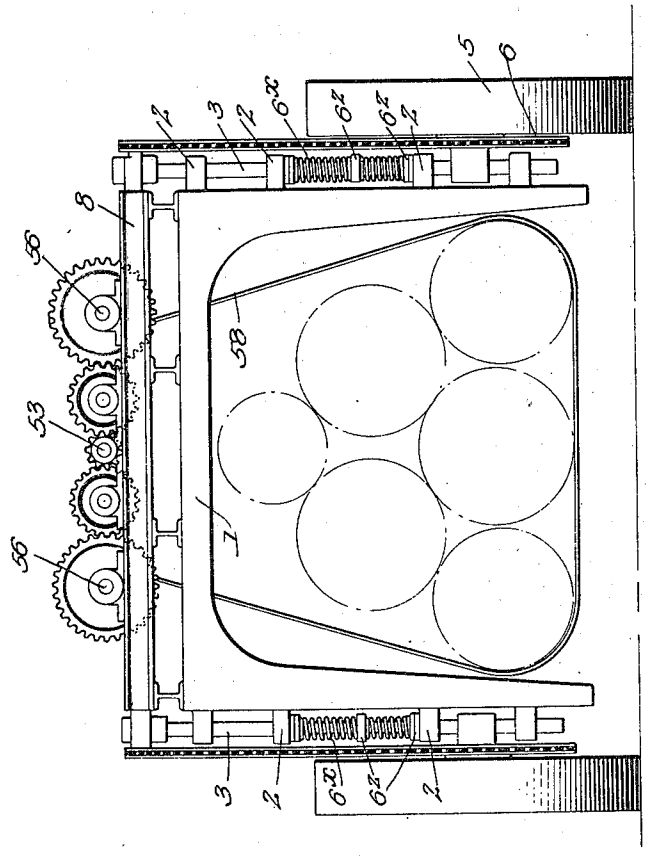

Fig. 3.

Inventor

John McLarty.

By Victor J. Evans

Attorney

Thomas E. Turpin

J. McLARTY.

LOGGING TRUCK.

APPLICATION FILED SEPT. 3, 1921.

1,436,999.

Patented Nov. 28, 1922.

4 SHEETS—SHEET 4.

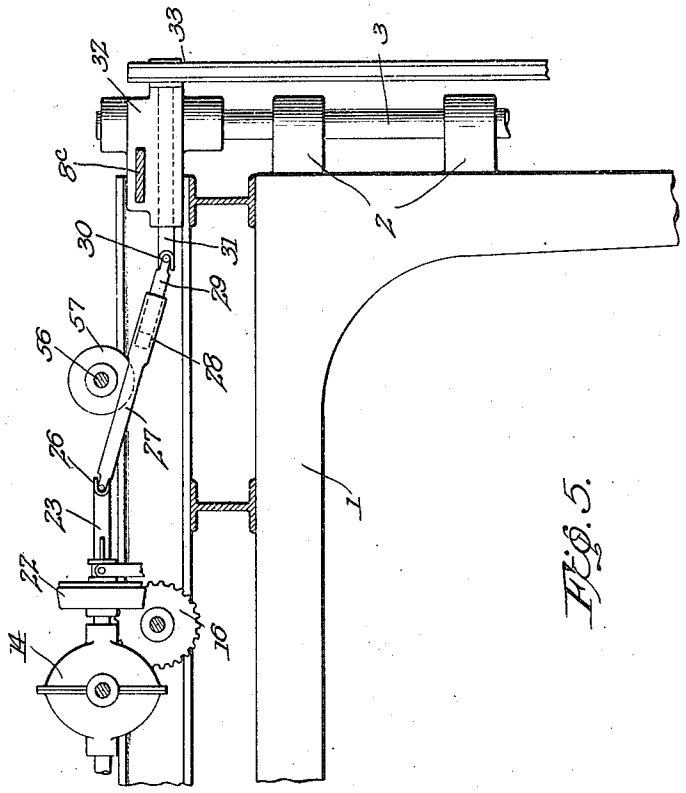

Fig. 5.

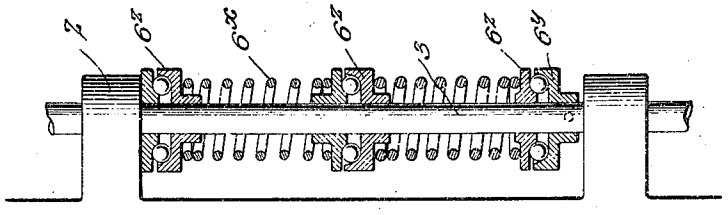

Fig. 4.

Inventor
John McLarty.

By Victor J. Evans
Attorney

Thomas E. Turpin

Patented Nov. 28, 1922. 1,436,999

UNITED STATES PATENT OFFICE.

JOHN McLARTY, OF KLAMATH FALLS, OREGON, ASSIGNOR OF ONE-HALF TO JENS HASSELBERG, OF KLAMATH FALLS, OREGON.

LOGGING TRUCK.

Application filed September 3, 1921. Serial No. 498,238.

To all whom it may concern:

Be it known that I, JOHN McLARTY, a citizen of the United States, residing at Klamath Falls, in the county of Klamath and State of Oregon, have invented new and useful Improvements in Logging Trucks, of which the following is a specification.

The object of my present invention is the provision of a power truck designed especially for logging purposes and constructed with a view to being moved with facility in woods and also with a view to quickly taking up and depositing a plurality of logs with but little labor on the part of an attendant or attendants.

The truck is designed to also serve other purposes as hereinafter set forth.

To the attainment of the foregoing, the invention consists in the improvement as hereinafter described and definitely claimed.

In the accompanying drawings, forming part of this specification:—

Figure 1 is a top plan view of the truck constituting the best practical embodiment of my invention that I have as yet devised.

Figure 2 is a side elevation of the improved truck.

Figure 3 is a rear end elevation of the truck.

Figures 4 and 5 are enlarged detail views of important combinations hereinafter explicitly referred to.

Similar numerals of reference designate corresponding parts in all of the views of the drawings.

Among other elements my novel truck comprises body arches 1, preferably of cast steel and spaced apart in parallel relation. A portion of one of said arches is shown in Fig. 5. The said body arches 1 are provided at the outer sides of their pendent portions with lateral apertured lugs 2, and guided in the said apertured lugs are vertical rods 3 on the lower portions of which are fixed spindles 4 by which are carried ground wheels 5 with sprocket gears 6 at their inner sides. Certain of the lugs 2 bear against the upper ends of coiled springs 6^x on the rods 3, shown in detail in Figure 4, with the result that the body arches 1 are yieldingly supported and are adequately cushioned. In this connection I would have it understood that I prefer to employ coiled springs 6^x such as illustrated in Figure 4; the said springs 6^x being interposed between lugs 2 and abutments 6^y fixed on the rods 3, and the springs being preferably in pairs and equipped with antifriction bearings 6^z as shown. The wheels 5 may be plain metallic wheels or may be equipped with rubber tires in the discretion of the manufacturer of the truck.

Interposed between and connecting the pendent portions of the body arches 1 are lower and upper longitudinal braces 7 and 8, Figure 2.

Superimposed on and suitably fixed to the ground portions of the body arches 1 are beams 9 which constitute the main frame of the truck, the outer beams 9 being connected at their forward ends by an arcuate portion 10 as best shown in Figure 1. The main frame also comprises cross beams 11 as best shown in Figure 1.

Carried on the forward portion of the main frame is a motor 12 which is preferably of internal combustion type. The drive shaft of the said motor 12 is numbered 13 and is connected in the ordinary well known manner with the working parts of a forward differential 14. Fixed on the said drive shaft 13 is a spur gear 15, Figure 1, in intermeshed relation with a spur gear 16 on a longitudinal shaft 17 which is connected by gearing 18 with the shaft 19 of a rear differential 20. The shafts 21 of the forward differential 14 are clutched at 22 to shafts 23, one of which is shown in Figure 5, and the shafts 24 of the rear differential 20 are clutched at 25 in similar manner to similar shaft 23. Each of the shafts 23 is connected through an universal joint 26 with a shaft section 27, and the said shaft section 27 is slidably connected at 28 to a shaft section 29; the said shaft section 29 being telescopically arranged in the shaft section 27 and being of angular form in cross section so as to be capable of moving endwise relatively to the section 27 and yet adapted to be turned about its axis by the same. The several shaft sections 29 are connected at their outer ends through universal joints 30 with shaft sections 31, carried in brackets 32 on the vertical rods 3. At their outer ends the shaft sections 31 are provided with sprocket gears 33 which are connected through the medium of sprocket belts 34, Figure 1 with the sprocket gears 6 on the ground wheels 5. In virtue of the connections just described it will be un-

derstood that the ground wheels 5 are driven from their respective differential; also, that by manipulating the clutches 22 and 25 any one of the ground wheels may be disconnected from the motor.

Clutched at 40 to the shaft 17 is a supplemental shaft 41 which is connected by gearing 42 with a drum 43. Manifestly through the medium of the clutch 40 the drum 43 may be connected with the motor 12 when it is desired to powerfully rotate the said drum 43. It will also be noticed by reference to Figure 1 that the shaft 17 is connected by gearing 50 with a shaft 51 at the rear of the truck. The said shaft 51 is clutched at 52 to a rear longitudinal shaft 53. On the shaft 53 in rear of the clutch 52 is a brake disk 54 associated with a brake band 55 which may be and preferably is manipulated in the manner common to brake bands. As best shown in Figures 1 and 3 the shaft 53 is connected by gearing with longitudinal shafts 56 arranged in parallelism and equipped with drums 57, designed and adapted to take up cables 58 in which logs may be suspended as indicated in Figure 3. Manifestly after the shaft 53 is clutched to the shaft 51 for the utilization of power in lifting the logs in the cables 58 clear of the ground, the brake band 55 may be applied in order to hold the cables 58 and maintain the logs carried by the said cables 58 in raised position.

For the steering of the truck I provide the means best shown in Figures 1 and 2. The said means comprises an upright shaft 60 equipped with a hand wheel 61 and a miter gear 62, and a shaft 63 carried slightly below the main frame and having a gear 64 intermeshed with the said gear 62. At its inner and rear end the shaft 63 is universally connected to a shaft 65 on the rear end of which is a miter gear 66. The said miter gear 66 is interposed between and connected to miter gears 67 and 68 on shafts 69 and 70, respectively. The shaft 69 is provided with a right hand thread on its outer portion and a shaft 70 is provided with a left hand thread on its outer portion. The said threaded portion of the shafts 69 and 70 are disposed in nuts 80 on slidable blocks 81 movable in guides 82 on the main frame. The said slidable blocks 81 are pivotally connected at 83 to arms 84 slidably arranged in the brackets 32 as best shown in Figures 1 and 5. In virtue of this construction it will be apparent that turning of the hand shaft 60 will be attended by swinging of all of the four brackets 32 in a common direction. Thus the truck may be readily guided toward the right or toward the left, according to the direction in which the hand shaft 60 is turned, by the movement of all of the ground wheels 5. From this it follows that the truck may be handled with great facility and may be quickly turned in a space of small area.

Having described my invention, what I claim and desire to secure by Letters-Patent, is:—

1. The combination of body arches having lugs, upright rods movable in said lugs and provided with abutments, springs to support the said body arches interposed between lugs thereof and the said abutments of the rods, spindles carried by the rods, ground wheels mounted on said spindles, means connecting the body arches, shafts carried by said upright rods and movable therewith, and driving connections between the said shafts and the ground wheels.

2. The combination of body arches having lugs, upright rods movable in said lugs and provided with abutments, springs to support the said body arches interposed between lugs thereof and the said abutments of the rods, spindles carried by the rods, ground wheels mounted on said spindles, means connecting the body arches, shafts carried by said upright rods and movable therewith, and driving connections between the said shafts and the ground wheels; the said springs each comprising two coiled spring units, anti-friction means between the adjacent ends of the said units and about the adjacent rod, anti-friction means between one unit and the abutment on the rod, and anti-friction means between the other unit and the body arch.

3. The combination of body arches having lugs, upright rods movable in said lugs and provided with abutments, springs to support the said body arches interposed between lugs thereof and the said abutments of the rods, spindles carried by the rods, ground wheels mounted on said spindles, means connecting the body arches, shafts carried by said upright rods and movable therewith, and driving connections between the said shafts and the ground wheels, with brackets fixed on the rods and containing the said shafts, and means for swinging the brackets and turning the rods about their axes for steering purposes.

4. The combination of body arches having lugs, upright rods movable in said lugs and provided with abutments, springs to support the said body arches interposed between lugs thereof and the said abutments of the rods, spindles carried by the rods, ground wheels mounted on said spindles, means connecting the body arches, shafts carried by said upright rods and movable therewith, and driving connections between the said shafts and the ground wheels, with brackets fixed on the rods and containing the said shafts, and means for swinging the brackets and turning the rods about their axes for steering purposes; the said means including transversely movable blocks, manual means to

simultaneously move said blocks in opposite directions, and arms interposed between and connecting the blocks and the brackets.

5. The combination of body arches having lugs, upright rods movable in said lugs and provided with abutments, springs to support the said body arches interposed between lugs thereof and the said abutments of the rods, spindles carried by the rods, ground wheels mounted on said spindles, means connecting the body arches, shafts carried by said upright rods and movable therewith, and driving connections between the said shafts and the ground wheels, with brackets fixed on the rods and containing the said shafts, and means for swinging the brackets and turning the rods about their axes for steering purposes; the said means comprising transversely movable blocks having right and left hand nuts, right and left hand threaded shafts engaging said nuts and having miter gears at their inner ends, a shaft having a miter gear interposed between in connection with the first-named miter gear, and a hand shaft connected with the last-named shaft.

In testimony whereof I affix my signature.

JOHN McLARTY.