D. C. HUGHES.

TOOL FOR FORMING AND DEFORMING TYPE STOPS IN TYPE HOLDERS.

APPLICATION FILED SEPT. 6, 1910.

1,153,391. Patented Sept. 14, 1915.

2 SHEETS—SHEET 1.

Fig. 1.

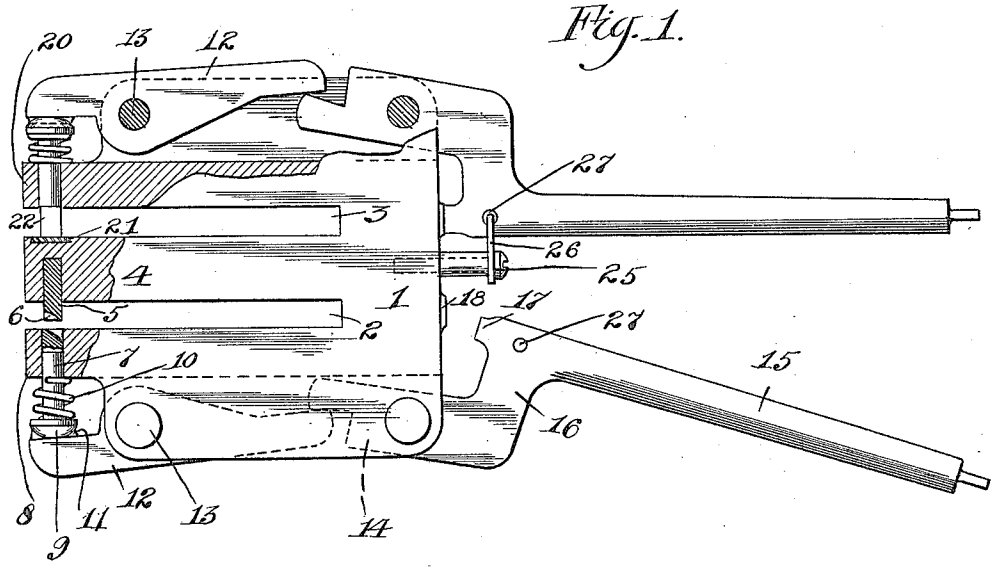

Fig. 2.

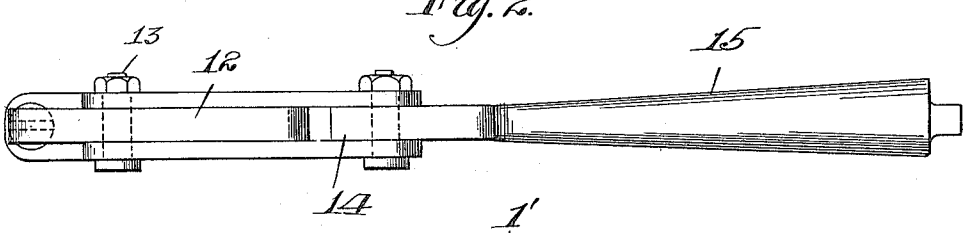

Fig. 3

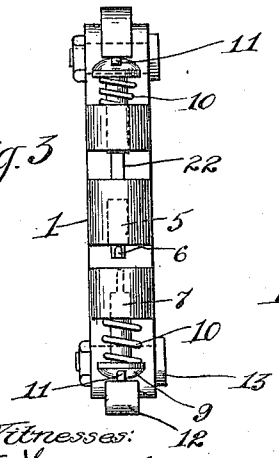

Fig. 4.

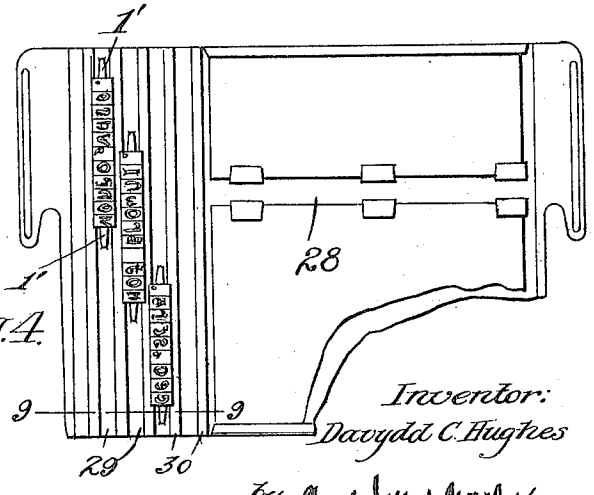

Witnesses:
Arthur W. Nelson
Robert McCreadie.

Inventor:
Davydd C. Hughes
by [signature]
Atty

D. C. HUGHES.

TOOL FOR FORMING AND DEFORMING TYPE STOPS IN TYPE HOLDERS.

APPLICATION FILED SEPT. 6, 1910.

1,153,391. Patented Sept. 14, 1915.

2 SHEETS—SHEET 2.

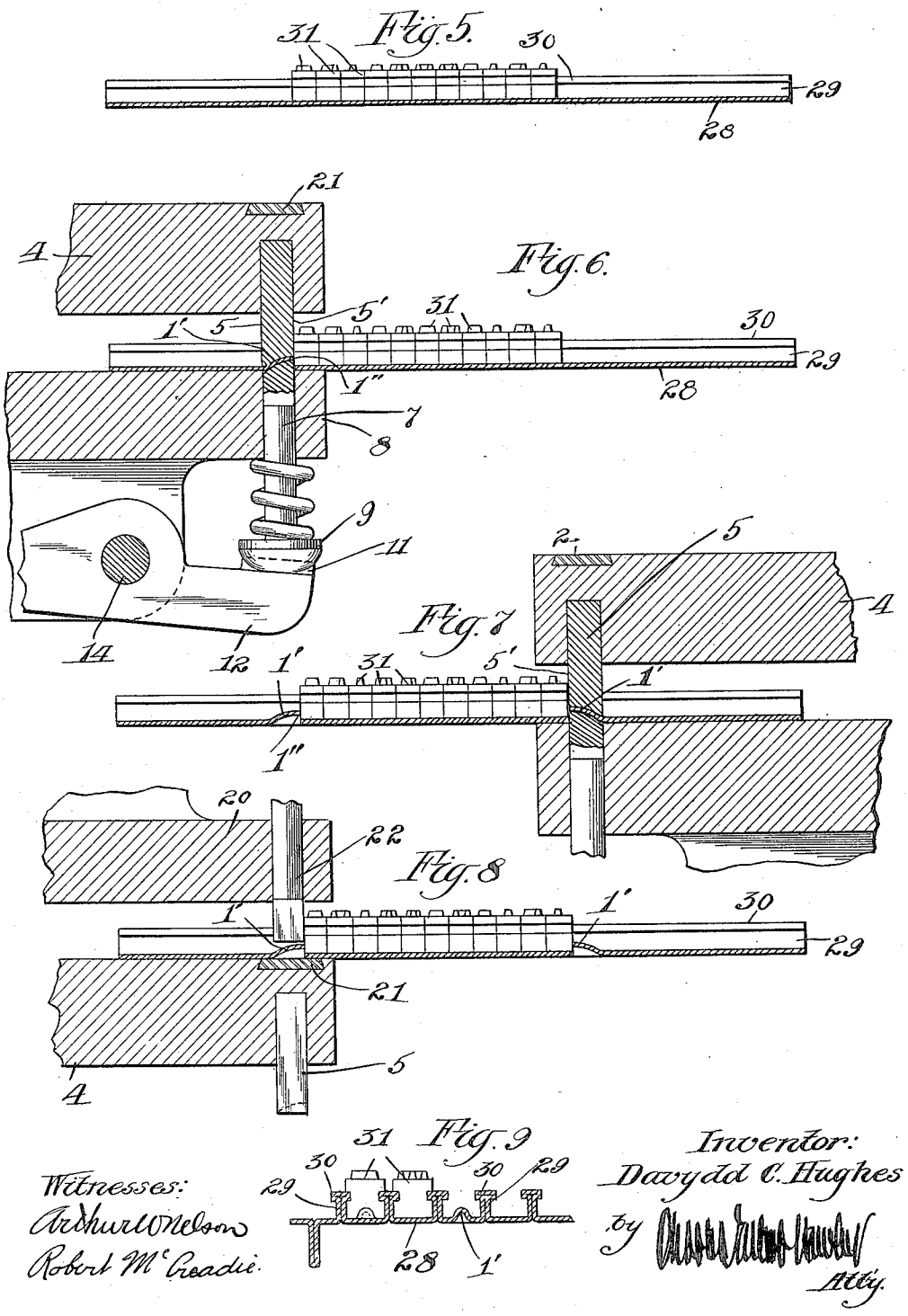

Witnesses:
Arthur W. Nelson
Robert McCreadie.

Inventor:
Davydd C. Hughes
by [signature]
Atty.

UNITED STATES PATENT OFFICE.

DAVYDD C. HUGHES, OF CHICAGO, ILLINOIS, ASSIGNOR, BY MESNE ASSIGNMENTS, TO ADDRESSOGRAPH COMPANY, OF CHICAGO, ILLINOIS, A CORPORATION OF ILLINOIS.

TOOL FOR FORMING AND DEFORMING TYPE-STOPS IN TYPE-HOLDERS.

1,153,391. Specification of Letters Patent. Patented Sept. 14, 1915.

Application filed September 6, 1910. Serial No. 580,547.

To all whom it may concern:

Be it known that I, DAVYDD C. HUGHES, a citizen of the United States, and a resident of Chicago, Cook county, Illinois, have invented certain new and useful Improvements in Tools for Forming and Deforming Type-Stops in Type-Holders, of which the following is a full, true, clear, and exact description, such as will enable others skilled in the art to which it appertains to make and use the same.

My invention pertains to metal working devices or tools and has particular reference to tools for fastening metal type in and liberating them from channeled type plates, such as used in printing and addressing systems.

The object of my invention is to provide a device which will operate to upset or strike up a portion of the metal within the type channels of the type holders so as to form integral abutments or type stops for securing and holding the type in their proper position in the type holders; which will be portable and convenient to handle and inexpensive to manufacture, which will be operable to jam or compress the line of type in the channel prior to the formation of a type stop so as to securely lock or fasten the type in position, which will also be capable of deforming or effacing the abutments or raised portions and returning them to their original condition so as to liberate the type from the type holder, and which will combine the several parts for performing these operations in one frame or supporting member.

My invention will be more readily understood by reference to the accompanying drawings, in which:

Figure 1 is a side elevation of a device or tool embodying my invention; Fig. 2 is a top view thereof; Fig. 3 is an end view thereof; Fig. 4 is a face view of a type holder showing a number of type stops formed in the type channels by said device; Figs. 5 to 8 inclusive are enlarged sectional views taken longitudinally of the type holder channel showing the formation of the type stops; and Fig. 9 is an enlarged sectional view on line 9—9 of Fig. 4.

In printing and addressing systems and the like a part of the system is usually constituted by individual or unit portable type holders or type plates which are stacked up in the drawer of a cabinet in a manner similar to that of a card index which are removed therefrom and placed in the magazine of a printing or addressing machine when it is desired to print the subject matter which said type holders represent. These type holders comprise small, rectangular pieces or sheets of metal provided with channels for receiving and holding type, and in these channels are placed the composed type which represent printable subject matter. The channels and type are usually formed so that they coöperate to retain the type in the channels against movement in any direction except longitudinal of the channel, this latter movement being necessary in order to permit the type to be inserted into the channels. After the type have been placed in position in the channels it is obviously essential that they be fastened in their position in the channels.

The device or tool which I have shown in the drawings constitutes one embodiment of my invention and is particularly adaptable to the forming and deforming of type stops or raised portions in the channels of type holders or type plates of suitable construction. Its function in this particular case is to lock the type in position by striking up or forming integrally with the bottom wall of the channel a bead or raised portion which extends upwardly into the channel of the type holder in position to engage with and constitute an abutment for the type therein and thereby maintain the type against longitudinal movement in their channels. It preferably comprises a body portion or main member 1 which forms a foundation upon which the various operating parts are mounted and maintained in their proper relation to each other. This body portion preferably comprises a flat substantially rectangular metal plate in which two long, parallel, narrow slots 2 and 3 are cut, the outer ends of these slots being open for reception of a type holder. In a sense these slots practically divide the body portion 1 into three parallel divisions or parts connected together at their inner ends, their free ends constituting fixed jaws between which a type holder or other metal to be operated upon is placed.

The middle division or jaw 4 has a har-

dened metal female die 5 embedded therein near its outer end, this die projecting into the slot 2 at substantially right angles thereto. This die is elongated in the direction of the channel and is comparatively thin in order to properly enter the channel, and it is suitably formed at its outer end 6 to coact with a movable male die 7 correspondingly formed on its outer end and mounted in a bearing near the outer end of the lower jaw 8 so that it may be reciprocated to and from the fixed die. The movable die 7 has an enlarged rounded head 9 between which and the jaw 8 is a spiral spring 10 which normally maintains the end of the die flush with or below the inner surface of the jaw so that a type holder may be inserted in position. This head 9 has a slot within which operates a projection or rib 11 carried upon the short arm of a compression member or lever 12. This compression member is pivoted upon a short bolt 13 and operates in a slot milled in the edge of the body portion. The long arm of this lever extends rearwardly where it engages with the shouldered end of the short arm 14 of an operating handle 15. The operating handle is pivoted similarly to the compression member 12 and operates in the same slot. A portion 16 of the operating handle is disposed at right angles in order to bring the handle nearer to the longitudinal axis of the device and to provide an abutment portion 17 which strikes the anvil 18 carried by the body portion, the purpose of this arrangement being to limit movement of the handle to the range of movement of the die.

Associated with the middle jaw 4 and the upper jaw 20 is another set of dies, the function of which is to deform or efface the beads or stops which are formed by the dies 5 and 7. The fixed die of this set comprises merely a flat, hardened plate 21 embedded in the middle jaw 4 so that its upper face lies flush with the surface of the jaw. Cooperating with this plate is a movable die 22 elongated in the direction of the type channel and mounted to reciprocate in a jaw 20 in a manner identical with that of the lower movable die 7. This die 22 has a flat face so that when the bead in the type holder is positioned between the dies and the device operated the bead will be flattened out or forced back into substantially the same condition it was originally. The die 22 is operated by a compression member and an operating handle in identically the same manner as the lower die 7 and needs no further description. It will be noted that by proportioning the arms of the compression members and the operating handles, as shown in the drawings, particularly Fig. 1, a comparatively powerful compressive force may be developed at the dies with little effort being required on the part of the user or operator. A pin 25 is secured to the rear edge of the body portion 1 and carries at its outer end a pivoted hook 26 which hooks into holes 27 provided in the operating handles, this arrangement enabling one set of dies to be locked while the other set is in use.

Referring now to Figs. 5 to 8, inclusive, I will describe the operation of my invention in connection with a type holder or type plate of suitable construction. The type holders illustrated on the drawings comprise substantially rectangular metallic plates 28 having upon their faces a plurality of channels 29 for receiving and containing the individual type. The channels are formed by ribs 29 crimped or folded up from the plate itself and provided with expanded upper edges which form overhanging flanges 30. These flanges restrict or reduce the entrance to the slots and are adapted to register with and engage the grooves in the side faces of the type 31 which are preferably used in a holder of this character. The coöperation of the ribs, flanges and grooves in the type serve to hold or retain the type in said channel against movement in any direction except longitudinally of the channel and, of course, it becomes necessary that some means of holding the type securely against longitudinal movement is necessary after they have been placed in position.

Figs. 5, 6, 7 and 8 disclose enlarged sections of a type holder taken longitudinally of the slot and show a series or line of individual grooved type in said channel. Assuming now that the type have been placed in the position in which it is desired that they should remain, the plate is passed into the slot between the jaws 4 and 8 of the tool and the die 5 brought into engagement with the end type in the channel. The plate lies flat upon the upper surface of the lower jaw 8, the handle 15 is then operated and the jaws are brought together to strike up or form up a bead or raised portion 1′ from the bottom of the slot which in this case is the plate itself. While it would of course be possible to sever the metal at each end of the raised portion, I prefer to arrange the dies so that they actually sever or cut the metal only at the point which is adjacent and engaged by the type. It is to be noted that the lower edge of the type against which the stop is formed acts as a shearing edge, and in conjunction with the dies it makes a clean cut of the metal, thus forming a right angled shoulder against which the type abut (as shown in Fig. 6). Having formed this abutment this device is brought into engagement with the other end of the line of type and the same operation repeated to punch up another and similar abutment (as shown in Fig. 7). It will be noted that the edge 5′ of the die which is in engagement with the end

type is substantially flush with the abutment shoulder of the bead, that is to say, the edge 5′ is directly in line with the severed edge of the bead, thereby leaving no space between the side face of the type and the abutment shoulder. The reason for this lies in the fact that the whole line of type in the slot may be compressed longitudinally against the first formed abutment and thereby clamp the type tightly in position. While this pressure is maintained the tool is operated and the second bead 1″ is struck up (as shown in Fig. 7). The dies may then be separated and the tool withdrawn leaving the line of type rigidly and securely clamped or locked between the two upset portions.

It is quite evident that the beads or stops must be formed in such a manner that they may be returned to their original condition, that is, pressed back again to a position substantially flush with the plate in order to leave the channels clear of any obstruction when it is desired to remove the type therefrom. I have therefore provided the other set of dies 21 and 22 for this purpose, these being flat-faced dies. When the tool is placed in position with the bead between the two faces of the dies and the dies brought together they will flatten out or compress the bead into substantially its original condition and the type may then be moved or shifted in their channels as easily as before the beads were formed.

It will be understood, however, that the device for performing the functions which I have just described may be constructed in various forms without departing from the spirit of my invention, and I desire that my invention be so constructed.

I claim:

1. A tool for forming stops against assembled type in a type plate, comprising a punch having dies, one of which is arranged to abut laterally against the type and the other arranged to make a transverse cut immediately adjacent the type and bend the neighboring metal inwardly.

2. A tool for forming abutment stops in a type plate, comprising a pair of dies, one of which abuts laterally against the type and the other of which is arranged to make a transverse cut in the metal and bend the metal inwardly, adjacent to the type, said dies being formed so that the type against which the die abuts forms a shearing edge for the metal.

3. A tool for longitudinally compressing type in the channels of a type plate and forming stops in the metal of the plate to prevent longitudinal movement of the type in the channel, comprising a pair of dies, one of which is constructed to engage the sides of the type and compress the same in the channel, and the other of which is arranged to shear and strike up the metal immediately adjacent the type.

4. A tool for longitudinally compressing type in the channels of a type plate and forming stops in the metal of the plate to prevent longitudinal movement of the type in the channels, comprising a set of fixed jaws spaced apart to permit the positioning of the type plate therebetween, a fixed die carried by one of said jaws and arranged to engage the sides of the type and compress the same in a channel, and a movable die carried by the other jaw and arranged to make a transverse cut immediately adjacent the type and to bend the neighboring metal inwardly.

5. A tool for longitudinally compressing type in the channels of a type plate and forming stops in the metal of the plate to prevent longitudinal movement of the type in the channel, comprising a set of fixed jaws spaced apart to permit the positioning of the type plate therebetween, a fixed die carried by one of said jaws and arranged to engage the sides of the type to compress the same longitudinally, and a movable die carried by the other jaw arranged to make a transverse cut immediately adjacent the type and to bend the neighboring metal inwardly, and power multiplying mechanism for reciprocating said movable die.

6. A tool for forming stops against assembled type in a type plate, comprising a die adapted to abut laterally against the type, and a coöperating die adapted to cut and bend the metal adjacent the type to provide an abutment.

In testimony whereof, I have hereunto set my hand this 22d day of August, 1910, in the presence of two subscribing witnesses.

DAVYDD C. HUGHES.

Witnesses:

M. SIMON,

JOHN R. LEFEVRE.

Copies of this patent may be obtained for five cents each, by addressing the "Commissioner of Patents, Washington, D. C."