SHUTTER FOR AN ELECTRIC RAZOR HAVING A CLEANING FUNCTION

Filed Jan. 11, 1968

Fig.1.

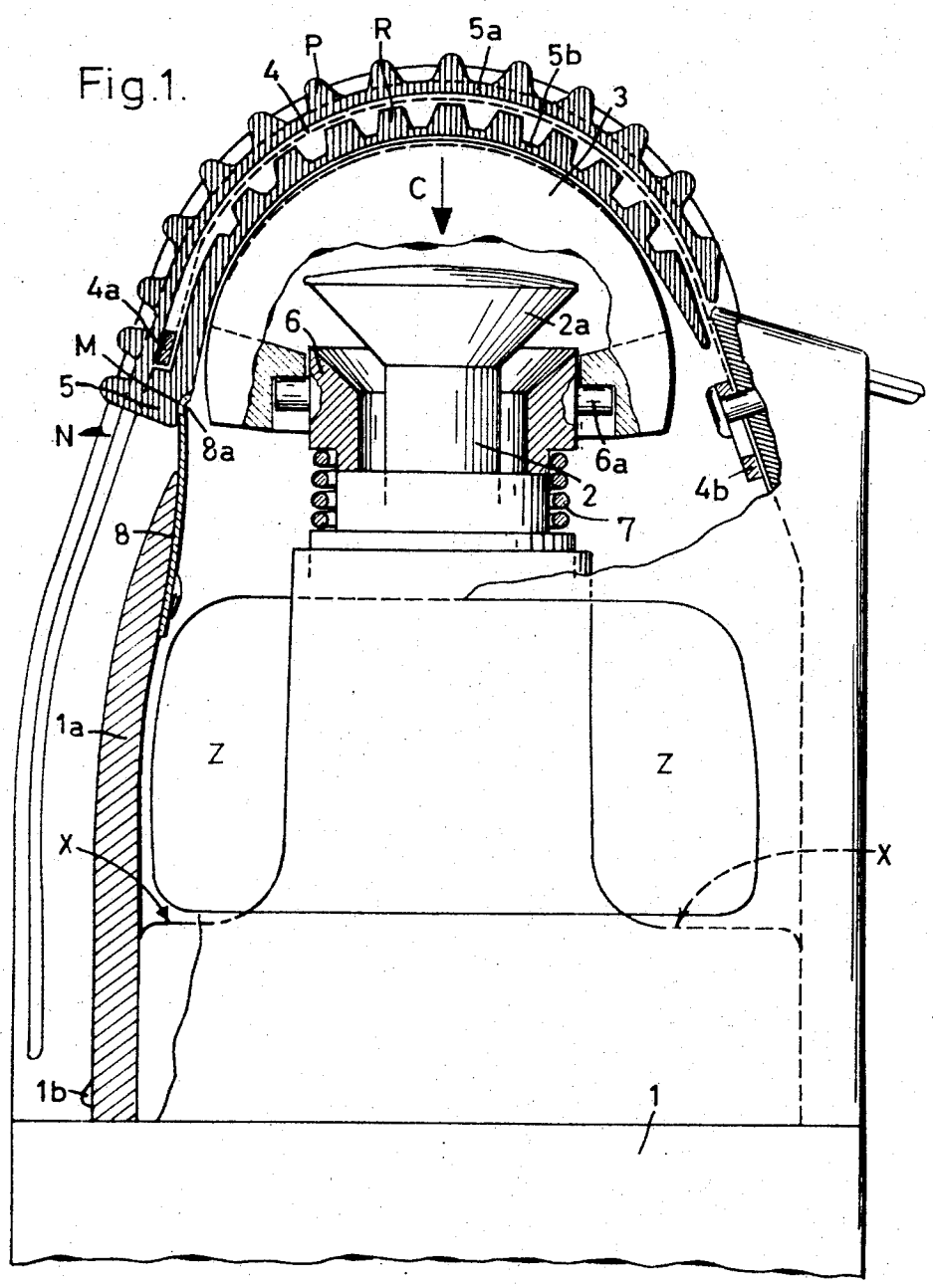

INVENTOR:
Ernst Moeckl
By E. G. Montague
Attorney

SHUTTER FOR AN ELECTRIC RAZOR HAVING A CLEANING FUNCTION

Filed Jan. 11, 1968

Fig. 2.

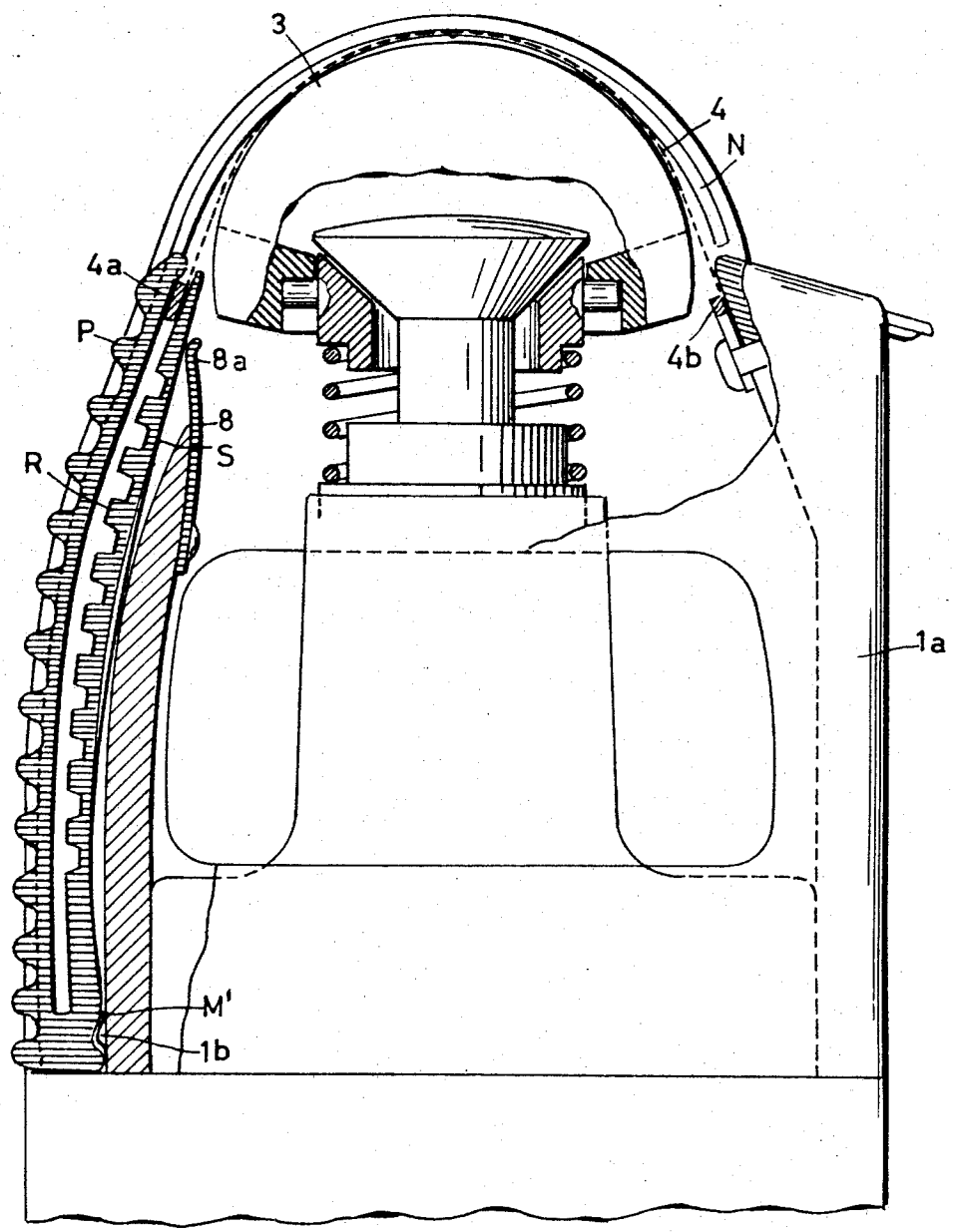

INVENTOR:
Ernst Moeckl
By E. G. Montague
Attorney

SHUTTER FOR AN ELECTRIC RAZOR HAVING A CLEANING FUNCTION

Filed Jan. 11, 1968

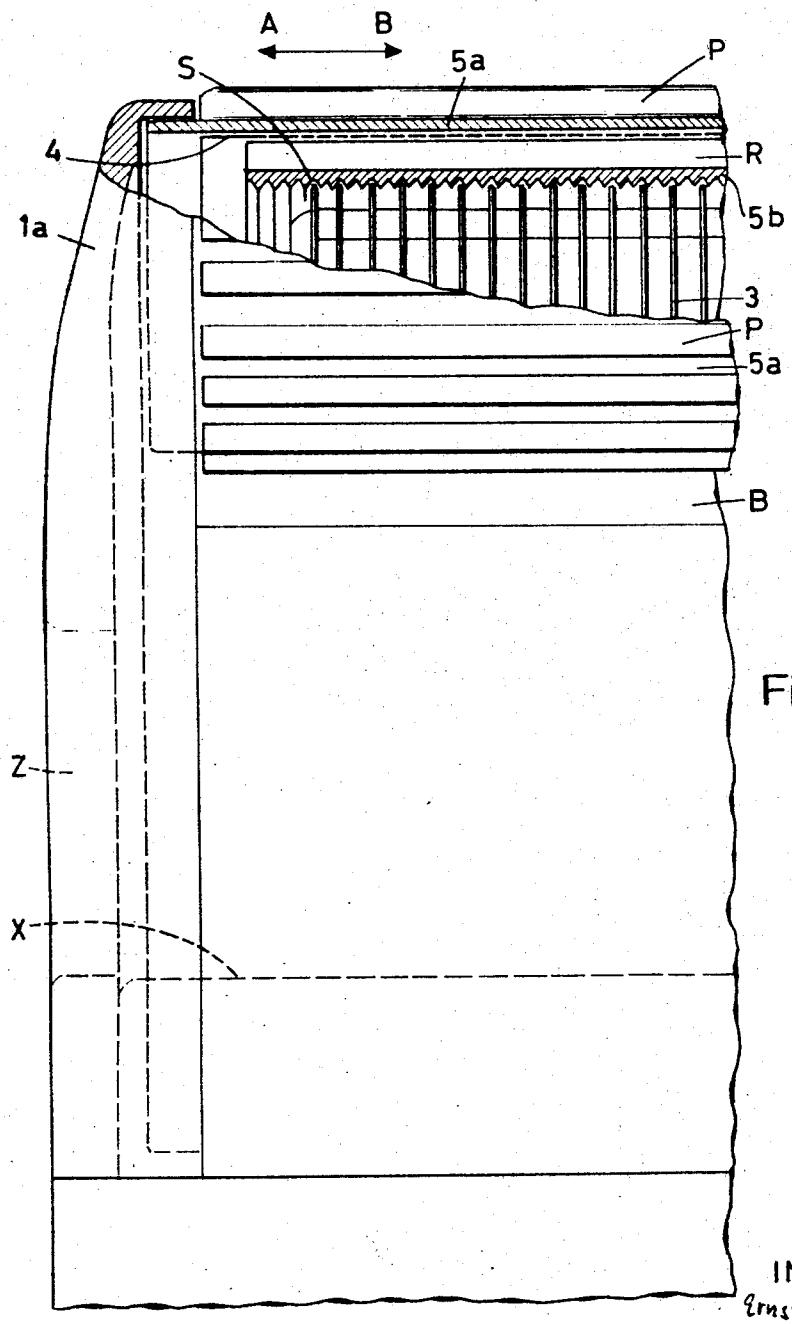

Fig.3.

INVENTOR:
Ernst Moeckl
By E.G. Montague
Attorney

SHUTTER FOR AN ELECTRIC RAZOR HAVING A CLEANING FUNCTION

Filed Jan. 11, 1968

Fig.4.

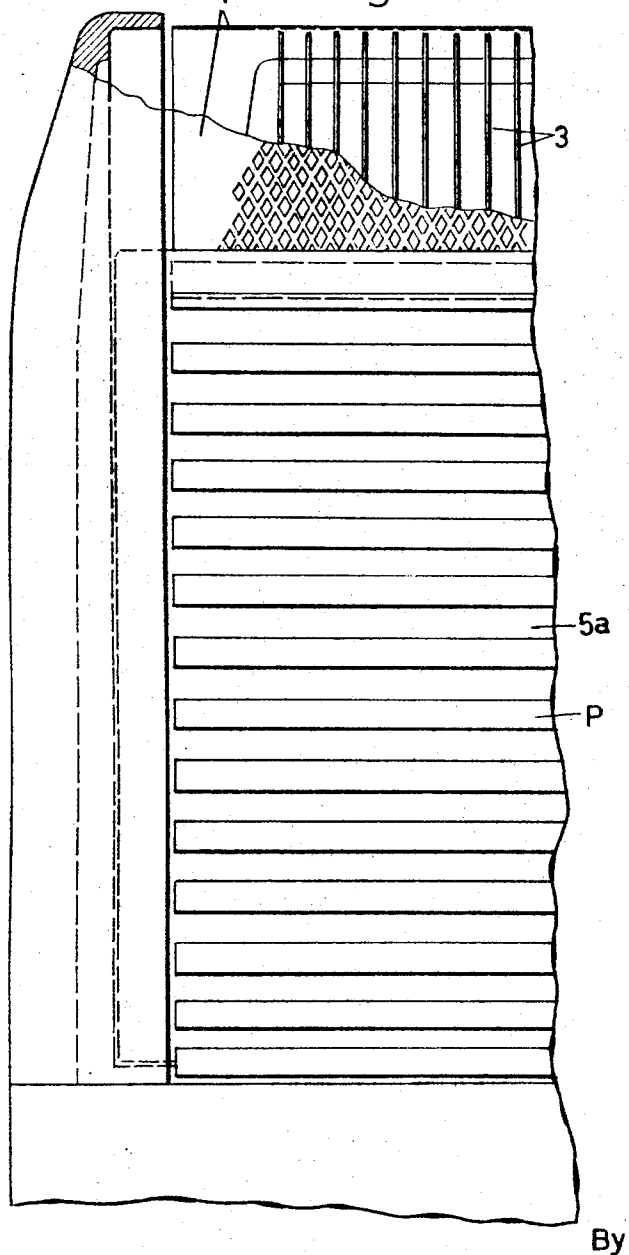

Fig.5.

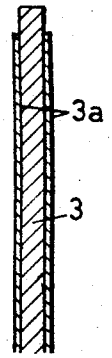

INVENTOR:
Ernst Moeckl
By Ernest G. Montague
Attorney

United States Patent Office

3,447,241

Patented June 3, 1969

1

3,447,241

SHUTTER FOR AN ELECTRIC RAZOR HAVING A CLEANING FUNCTION

Ernst Moeckl, 1 Durrbach, 7 Stuttgart-Wangen, Germany

Filed Jan. 11, 1968, Ser. No. 697,134
Claims priority, application Germany, Jan. 13, 1967, M 57,518
Int. Cl. B26b *19/38*
U.S. Cl. 30—41 10 Claims

ABSTRACT OF THE DISCLOSURE

An electric razor which comprises a shearing cutter block. Means are provided for pendulum driving the shearing cutter block. A shearing sheet is also provided. A shutter covers and exposes, respectively, the shearing cutter block and cleans the shaving sheet. A shearing head is disposed within a shutter guide. A spring-biased snap-rest lock arrests the shutter in its shutter closing position. The snap-rest lock comprises a bending rod spring arrangement, and the latter is fixed to the shutter guide.

The present invention relates to a shutter for an electric razor having a shearing cutter block, which is by example, pendulum-driven, and having a shearing sheet as well as shutter, to cover and expose, respectively, the shearing unit.

It is one object of the present invention to provide an electric razor, wherein a cutter is rendered optimally reliable in operation and has further functions beyond the action of the cutter head protection. In addition to this, it is an object to adapt the shutter to such razor unit types in particular, in which shearing cutter blocks are reciprocated by a pendulum.

It is another object of the present invention to provide an electric razor, wherein the shutter movement is rendered smooth, thus allotting ample play to its guides, fixing, however, the end positions by snap rest devices, wherein the snap lock of the shutter closing position is enforced by a special spring, namely, a bending rod spring with snapping effect. As a rule, such springs are sufficient for snap rest effects, which are disposed within the range of non-permanent spring actions of the shutter material. The concept of the present invention, however, goes beyond this snap rest effect, for it is endeavored to ensure that the cutting edges of the shearing cutters, or the inner side of the shearing sheet, respectively, are cleaned by the shutter, by movement thereof which crosses the running direction of the cutters and therefore removes organic deposits in the direction of the shutter movement or prevents their formation, respectively.

It is still another object of the present invention to provide an electric razor, wherein the shutter is of U-shape. Only its outer leg is guided at both ends. Both legs are rippled equally externally crosswise to the running direction of the shutter. The inner surface of the outer leg is smooth, but the inner surface of the inner leg is rippled longitudinally, and in particular with the same division as the cutters. The snap rest or, respectively, the dome for the additional rest spring is disposed within the range of the center section of the shutter U-profile.

It is yet another object of the present invention to provide an electric razor which includes a spring-biased coupling ring disposed on a pendulum, which coupling ring permits the cutter block to escape more or less easily in the direction of the pendulum axis, to be uncoupled slowly and to come to a standstill.

With these and other objects in view which will become apparent in the follwing detailed description, the present

2

invention will be clearly understood in connection with the accompanying drawings, in which:

FIGS. 1 and 2 are axial cross sections of the electric razor, FIG. 1 indicating the closing position and FIG. 2 a ready position of the shutter;

FIGS. 3 and 4 are elevations, partly broken away, indicating the shutter closing position in FIG. 3 and the razor ready position in FIG. 4; and

FIG. 5 is a cross section of a cutter blade.

Referring now to the drawings, a shearing head **1***a* of a case **1** of the razor unit encloses a pendulum **2** which is provided with a pendulum mushroom **2***a*. The latter reciprocates by an electromotoric force, while moving in a shearing action the shearing cutter block **3** in the direction A or B, respectively. The stationary part of the shearing mechanism is the strainer-shaped shearing sheet **4**, of which one fixed end **4***a* is gripped clamplike by an outer leg **5***a* and an inner leg **5***b* of the shutter **5** guided in grooves N, whereas the other end **4***b* is supported slidably at the shearing head **1***a*.

A coupling ring **6**, having opposed pivots **6***a*, is biased by a helical spring **7**, so that the shearing cutter block **3** may move aside in the direction C, when the inner leg **5***b* of the shutter **5** is moved into the gap between the shearing sheet **4** and the shearing cutter block **3**.

The two legs **5***a*, **5***b* of the shutter are provided equally, externally with cross ripples P and R, whereas the inner side of the inner leg **5***b* is fitted with circumferential ripples S.

These ripples S, with their division of a finer grade, are adjusted to the spacings of the cutting blades of the shearing cutter block **3**. A set-off M, a cam **1***b* of the shearing head **1***a*, and a cam **8***a* of a bending rod spring **8** are elements of the snap rest locks.

When the shutter is to be moved into its closing position, the snap lock M', **1***b* (FIG. 2) is unlocked. The inner leg **5***b* is slid into the gap between the shearing cutter block **3** and shearing cutter sheet **4**. The shearing cutter block **3** and the coupling ring **6** slide then in the direction C. The shearing sheet **4** also yields to the guiding action exerted by the outer leg **5***a* of the shutter. The snap lock M' and the cam **8***a* assumes a locking position as soon as the shutter has reached the shutter closing position (FIGS. 1 and 3).

The above-described embodiment brings about forcibly the complete cleaning of the cutting edges or blades of the shearing cutter block **3** and also of the inner side of the shearing sheet **4**, and this is accomplished by a combination of the outer leg **5***a* serving as a protective shutter and the inner leg **5***b* serving as a cleaning shutter. Since the outer leg **5***a* of the shutter is slid over the shearing sheet **4** after shaving and is retracted again before shaving, upon enforced joining of the rod spring **8** acting as a cleaning stripper, there is accomplished the cleaning of the shearing system in two directions. The hair particles, which during the shaving fall downwardly through the freely extending shearing cutters of the shearing cutter block, are collected within the range of area X. The debris removed from the cutters of the shearing cutter block **3** by a cleaning material such as polyvinyl-chloride, polyamide, silicon-resin, tetrafluorethylene or the like, which is collected during the reciprocation of the legs **5***b* likewise on this area. During withdrawal of the shutter, the cleaning stripper **8**, designed as a leaf spring, strips off at the point **8***a*, residuals that cling to the inner side of the inner leg **5***b* or cleaning shutter **5** and which residuals also fall into the range X. To facilitate removal of the shaving chips, etc., the shearing head is laterally provided with large openings Z which may be blown through. Hence, the shearing head must be removed only if parts are to be replaced, or if a thorough overall cleansing with fluid cleaning agents is to be performed.

When the shutter with the stripper area is slid over the shearing head, the shearing sheet **4** is shifted somewhat lower in its cutting range, and for this purpose it is guided slidably on one side. Through the sliding in of the inner leg **5***b* or cleaning shutter **5** between the shearing sheet **4** and the cutter block **3**, the latter is shifted downward and thereby uncoupled from the driving pivot. In this position it is possible, for instance, to operate the long-hair cutter, arranged laterally, even with completely covered shearing sheet and stationary cutter block.

The coupling may be designed, for instance, according to FIGS. 1 and 2. This coupling has the further advantage, that with stronger pressure on the shearing area during shaving, the cutter movement is reduced and irritations of the skin are thus avoided. The cleaning effect of the electric razor is further augmented if the cutters or blades, respectively, of the cutter block are stratified with a dirt-rejecting synthetic resin, as skins **3***a* in FIG. 5, as with Teflon, ultramide, polyvinylchloride, polyamide, silicon-resin, tetrafluorethylene or the like.

While I have disclosed one embodiment of the present invention, it is to be understood that this embodiment is given by example only and not in a limiting sense, the scope of the present invention being determined by the objects and the claims.

I claim:

1. An electric razor comprising

a shearing head,

a shearing cutter block disposed within said shearing head,

means for pendulum driving said shearing cutter block,

a shearing sheet operatively mounted on said shearing head and covering said shearing cutter block,

a shutter slidably disposed on said shearing sheet covering and exposing, respectively, said shearing cutter block, said shutter has a substantially U-shaped cross section which includes an inner leg and an outer leg, said shearing sheet and said shearing cutter block define a gap, and said inner leg is guided slidably as a tongue in said gap;

a spring-biased snap-rest lock arresting said shutter in its shutter closing position.

2. The electric razor, as set forth in claim **1**, wherein

said pendulum means includes a pendulum and a coupling disposed between the pendulum and said shearing cutter block and comprising a frustoconically shaped pendulum mushroom disposed on said pendulum,

a coupling ring movably disposed about said pendulum and having a frustoconically shaped seating surface operatively complementary to said pendulum mushroom,

a pretensioned helical spring coaxially surrounding said pendulum and pressing against said coupling ring biasing the latter upwardly against said pendulum mushroom,

oppositely disposed driving pivots pivotally connecting said coupling ring to said shearing cutter block, and

said coupling ring is centered in said shearing cutter block and defines a play between said pendulum and said coupling ring.

3. The electric razor, as set forth in claim **1**, wherein said shearing sheet is locked at one end within the range of said snap-rest lock, and its other end is slidably guided to permit sliding movement upwardly when said shutter is slid out of said gap.

4. The electric razor, as set forth in claim **3**, wherein

said inner and outer legs of said shutter are substantially of equal length and rippled on the outside, and

said outer leg is internally smooth.

5. The electric razor, as set forth in claim **1**, wherein

said shearing cutter block includes cutting blades,

the interior surface of said inner leg of said shutter is circumferentially rippled at a finer scale, and

said finer scale ripples of said inner leg are adjacent said cutting blades in said shutter closing position and are spaced relative said cutting blades to constitute a cleaning shutter and cutter guides for said cutting blades.

6. The electric razor, as set forth in claim **5**, wherein said snap-rest lock comprising a leaf spring arrangement, and the latter being fixed to said shearing head,

said leaf spring comprises an elastic metal strip extending over substantially the entire width of said inner leg of said shutter and presses against said interior surface of said inner leg during sliding movement of the latter constituting a cleaning stripper for said interior surface of said inner leg.

7. The electric razor, as set forth in claim **5**, wherein said cutter blades are laterally stratified except at the edges of said cutter blades with dirt rejecting synthetic resin.

8. The electric razor, as set forth in claim **1**, wherein

said shutter is integrally formed, said shaving head defines a shutter guide groove, and

said outer leg is slidably guided in said shutter guide groove.

9. The electric razor, as set forth in claim **8**, wherein said inner leg of said shutter is longitudinally rippled on its outer surface facing said shearing sheet.

10. The electric razor, as set forth in claim **9**, wherein said longitudinal ripples of said inner leg correspond to those of said outer leg.

References Cited

UNITED STATES PATENTS

1,777,829	10/1930	Edgecumbe	192—66
2,270,800	1/1942	Johnson et al.	30—34 X
2,457,367	12/1948	Hale	192—66
2,691,216	10/1954	Ross	30—34
2,787,830	4/1957	Argiro	30—34
2,804,957	9/1957	Pechin	192—66 X
2,811,774	11/1957	Otto et al.	30—34 X
2,852,115	9/1958	O'Neill	192—66 X
3,076,108	1/1963	Oliver et al.	30—43.92 X
3,138,866	6/1964	Ressler	30—43.2
3,143,796	8/1964	Bond	30—34

FOREIGN PATENTS

1,122,410 1/1962 Germany.

MYRON C. KRUSE, *Primary Examiner.*

U.S. Cl. X.R.

30—34, 43.92