United States Patent

Bahnsen

[15] **3,635,277**

[45] **Jan. 18, 1972**

[54] DOOR CONTROL MECHANISM

[72] Inventor: **Erwin B. Bahnsen,** Hinsdale, Ill.

[73] Assignee: **Steiner American Corporation,** Salt Lake City, Utah

[22] Filed: **Oct. 29, 1969**

[21] Appl. No.: **872,130**

[52] **U.S. Cl.** **160/191,** 49/200, 49/272, 49/379

[51] **Int. Cl.** **E05f 11/54,** E05f 13/00

[58] **Field of Search** 49/360–364, 379, 49/199, 200, 263–274; 160/188–191

[56] **References Cited**

UNITED STATES PATENTS

2,543,506	2/1951	Peters	49/267
2,630,597	3/1953	Robinson	160/191
2,749,570	6/1956	Alder	16/198
2,882,044	4/1959	Ginte	160/189 X

Primary Examiner—J. Karl Bell

Attorney—Prangley, Clayton, Mullin, Dithmar & Vogel

[57] **ABSTRACT**

A door control mechanism for controlling the movement of a sectional door between the closed position and the open position thereof wherein the door is biased towards the closed position thereof, the mechanism accommodating manual movement of the door to the open position followed by an automatic movement of the door to the closed position followed by an automatic movement of the door to the open position and then followed by manual movement of the door to the closed position, the mechanism including a first latch having a door-holding condition for holding the door in its open position and having a door-releasing condition for releasing the door and allowing it to move to the closed position thereof, a second latch mechanism having a device-connecting condition for connecting an energy-storing device to the door thereby automatically to move the door to the open position thereof, and having a device-holding condition for maintaining the energy-storing device out of operative connection with the door, a trigger for selectively operating the first and second latch mechanisms, and a selector for selectively rendering the trigger operable to change the condition of only one of the first and second latch mechanisms at one time.

43 Claims, 40 Drawing Figures

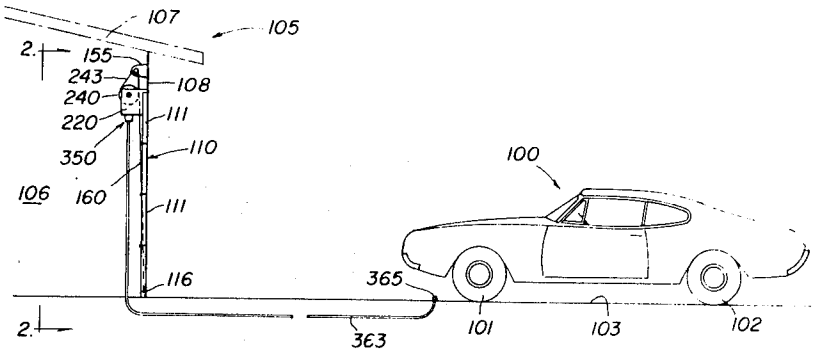

FIG. 1

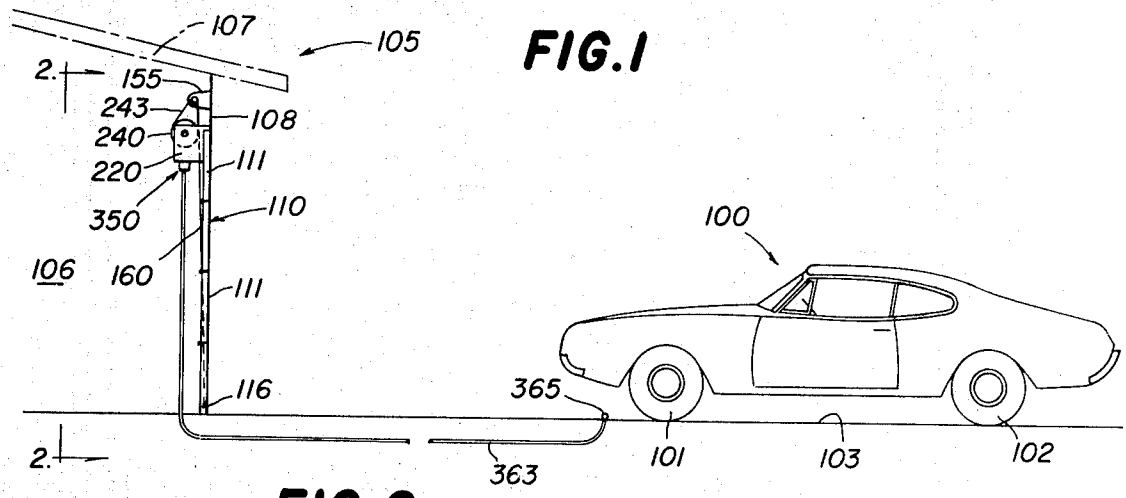

FIG. 2

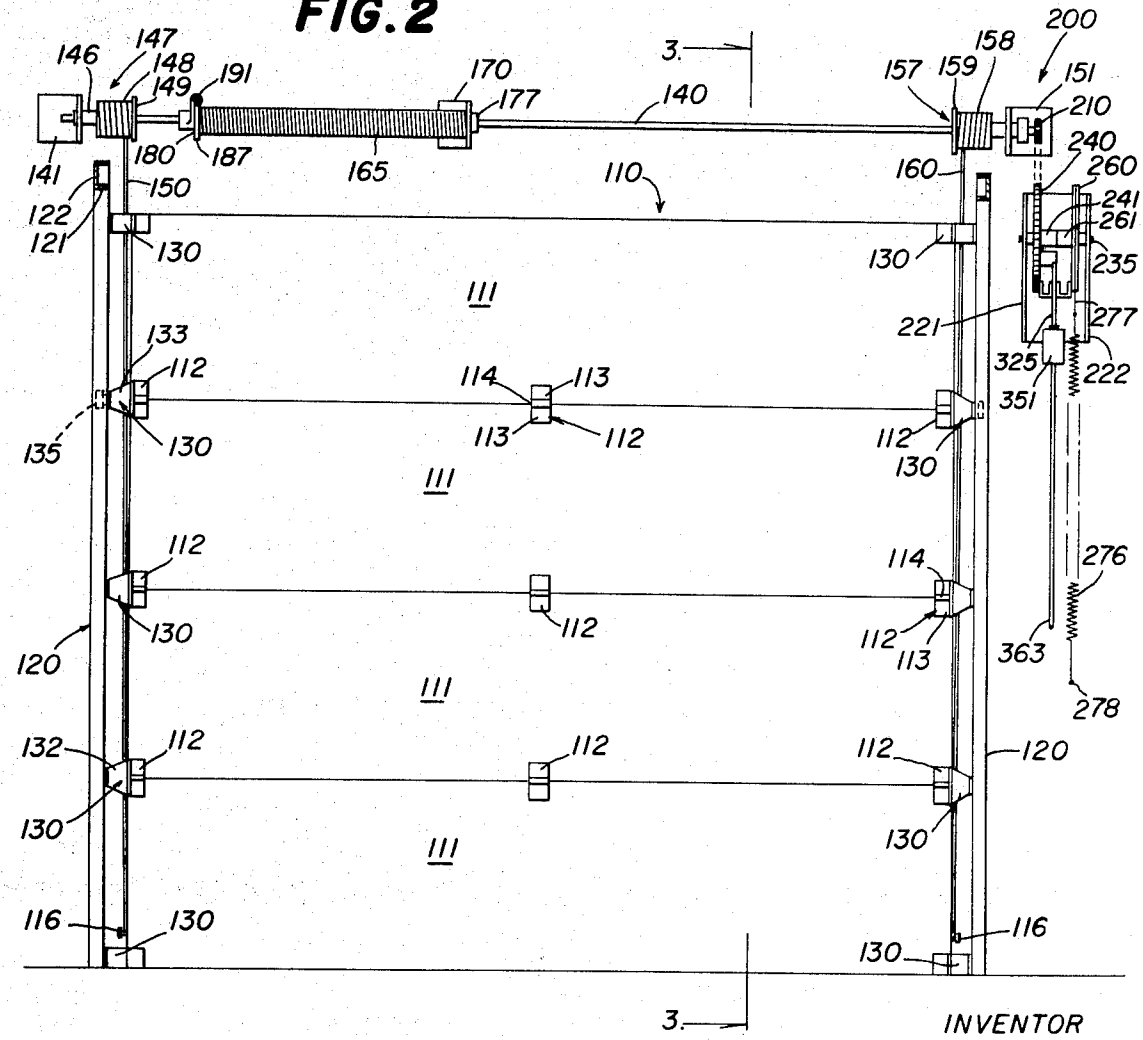

INVENTOR
ERWIN B. BAHNSEN

BY
Pravley, Clayton, Mullin,
Dithmar & Vogel
ATTYS.

FIG. 4

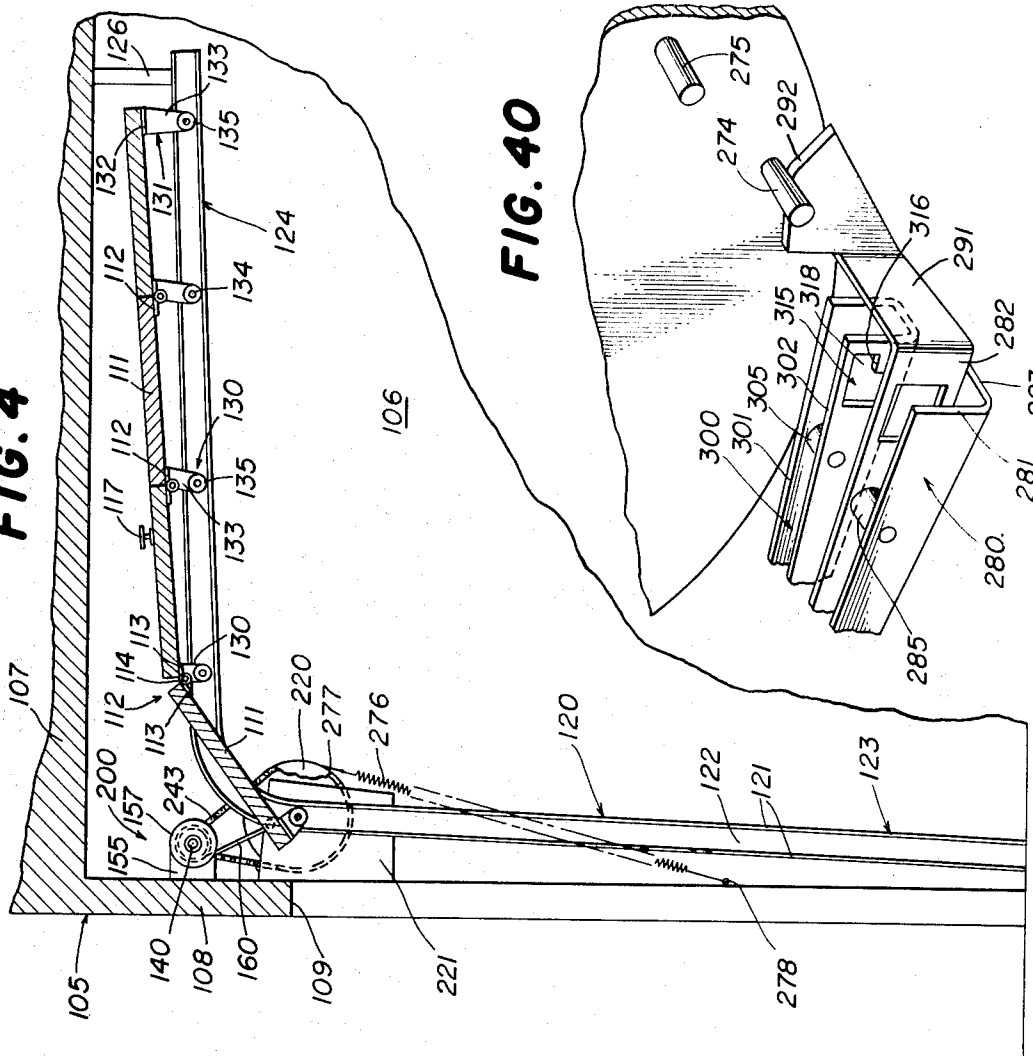

FIG. 40

FIG. 3

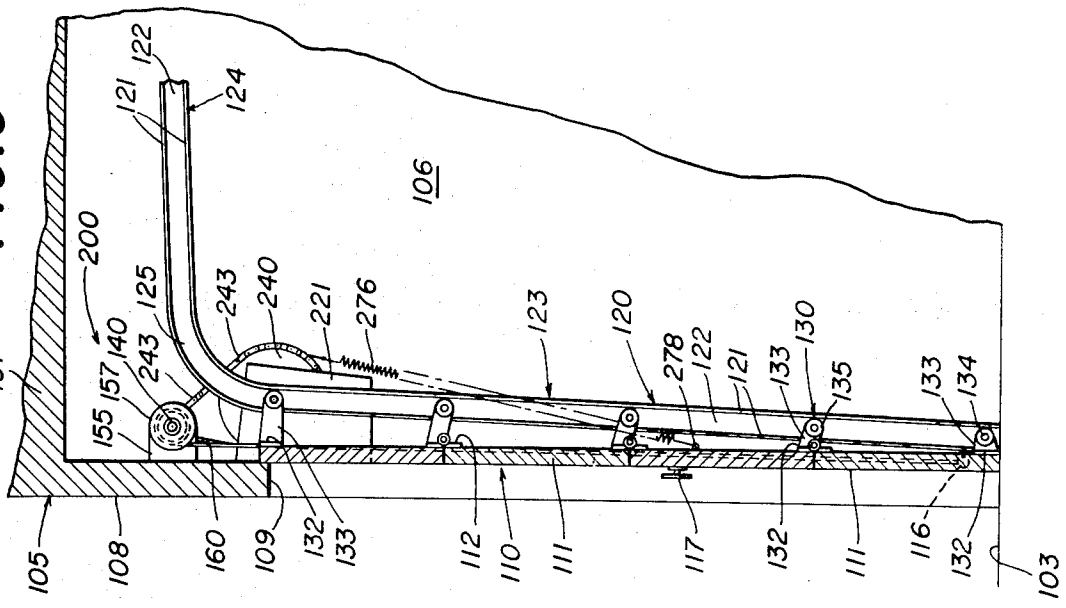

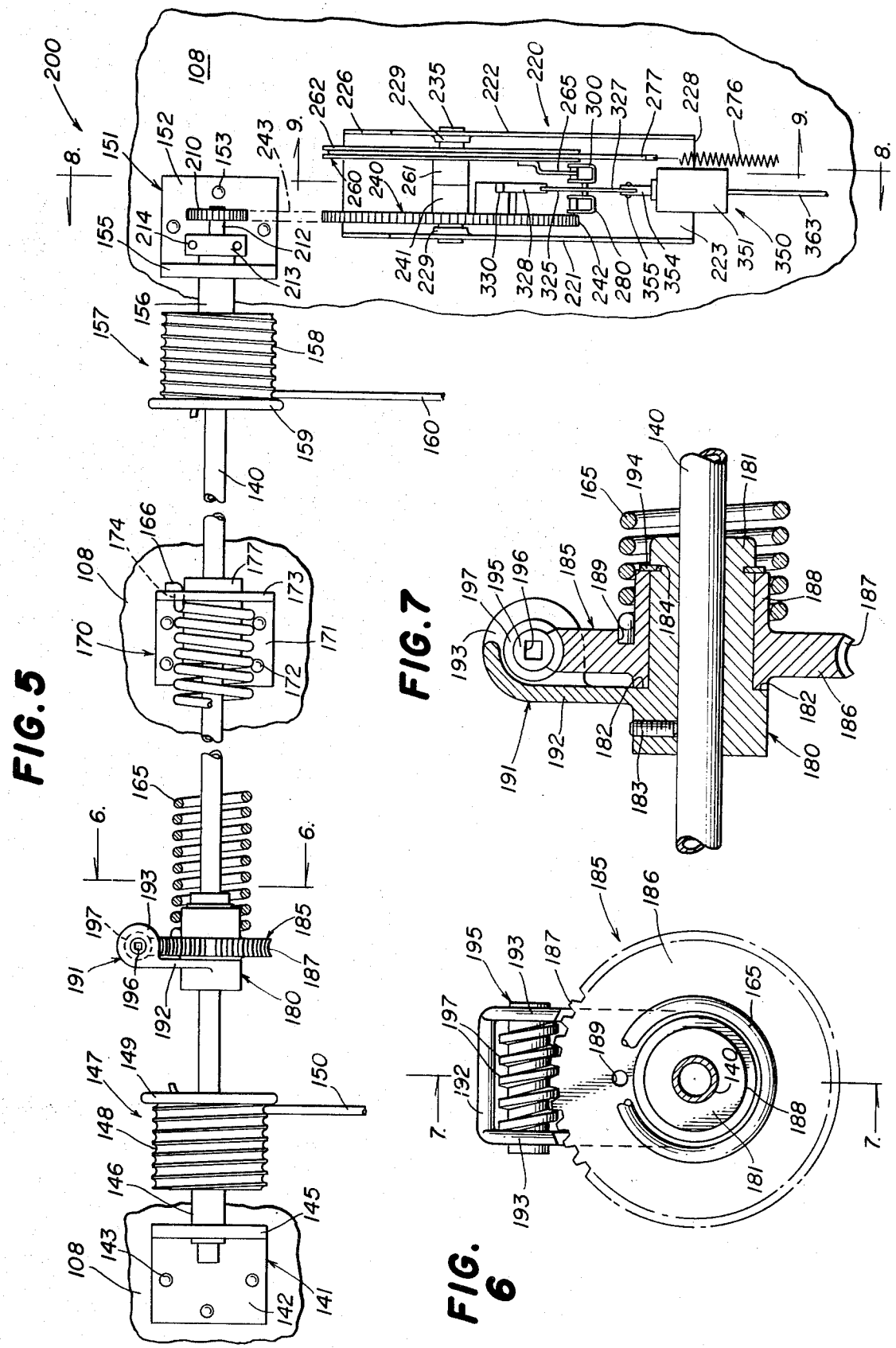

FIG. 5

FIG. 7

FIG. 6

FIG. 8

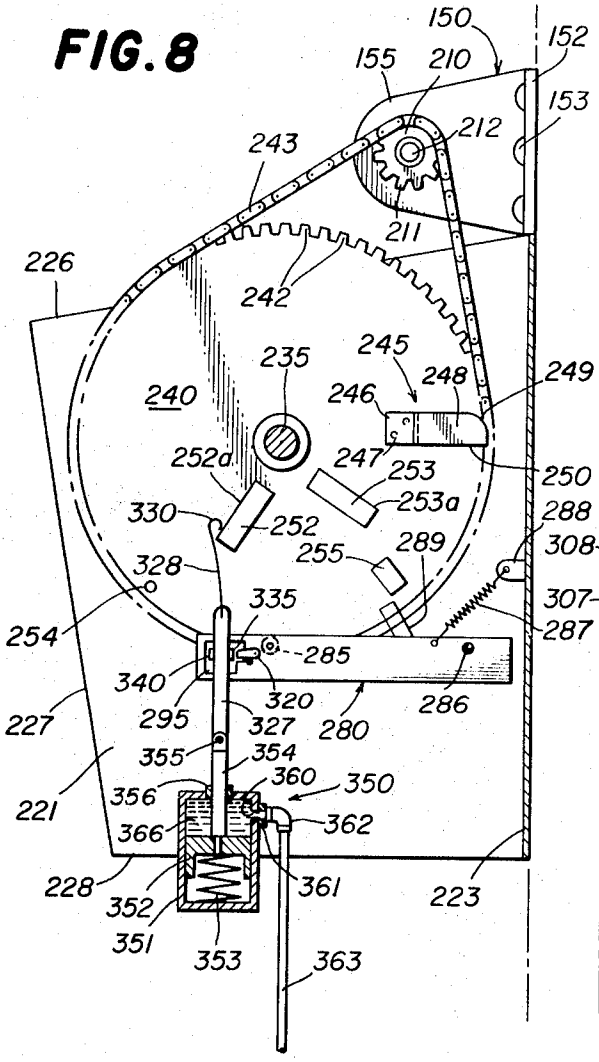

FIG. 9

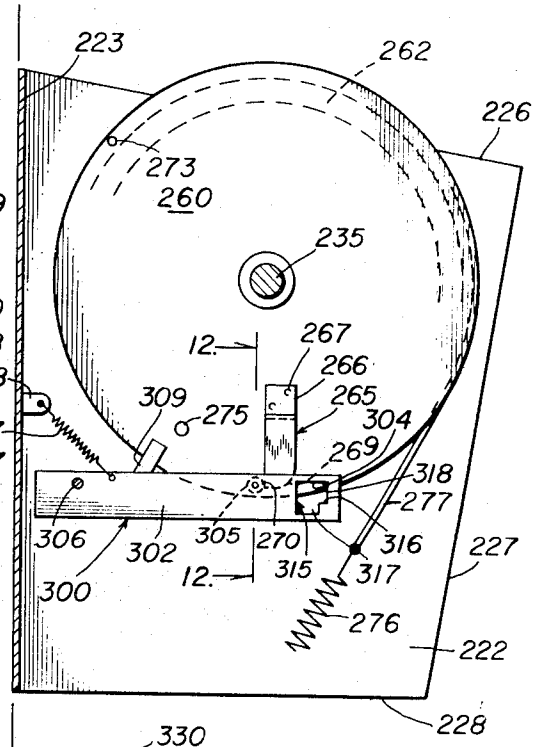

FIG. 10

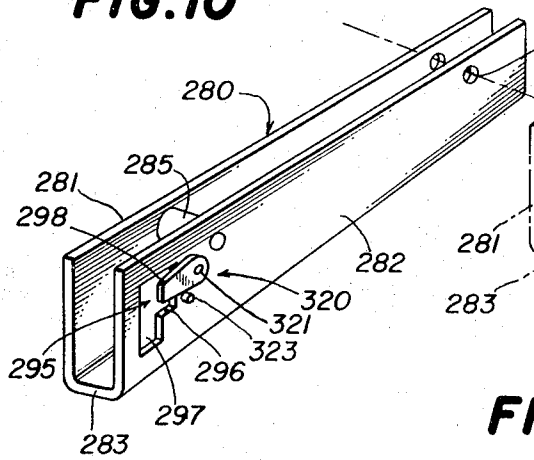

FIG. 11

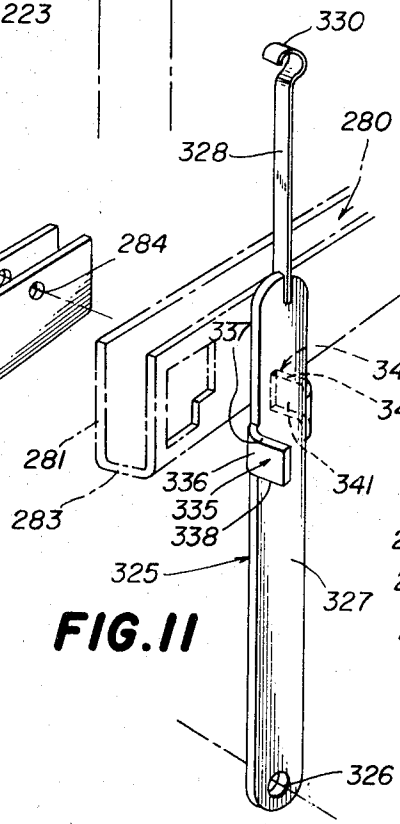

FIG. 12

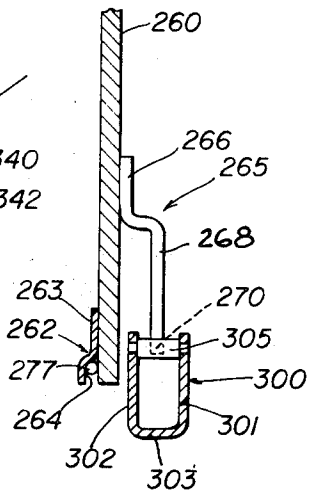

FIG. 13

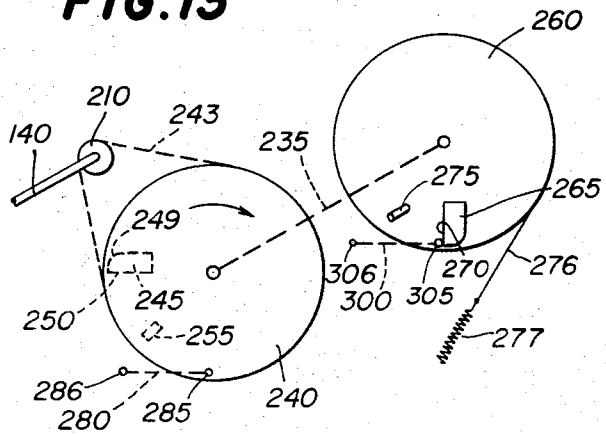

FIG. 16

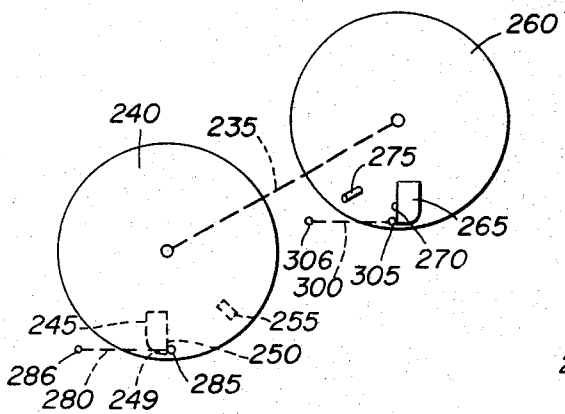

FIG. 19

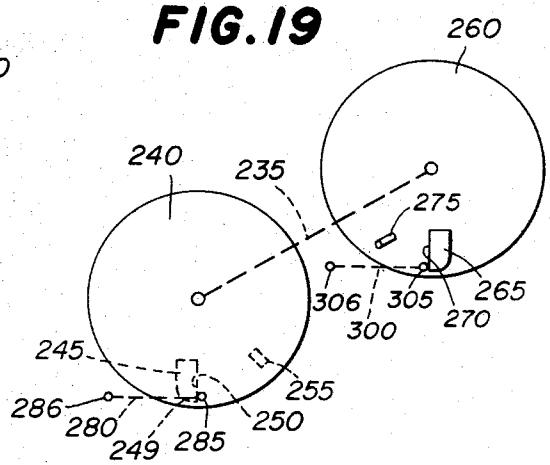

FIG. 14

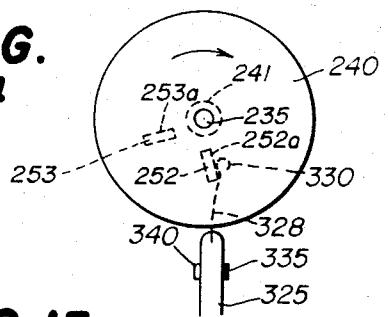

FIG. 17

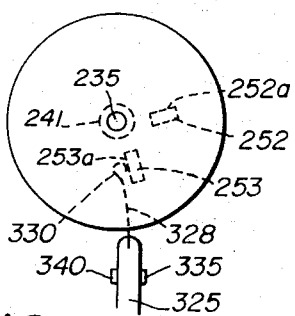

FIG. 20

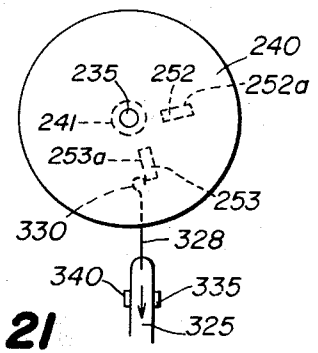

FIG. 15

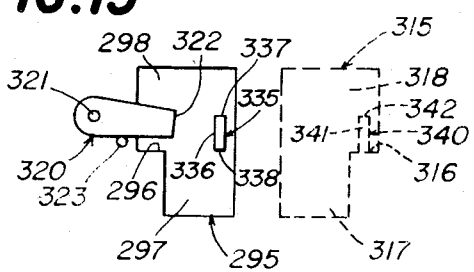

FIG. 18

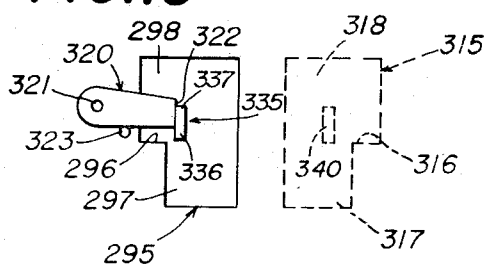

FIG. 21

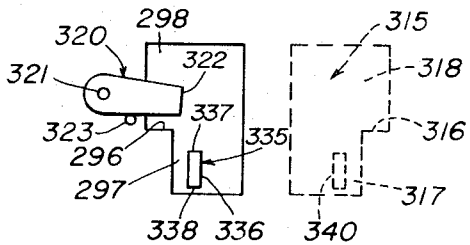

FIG. 22
260
265
270
275
305
300
306
235
255
250
240
245
285
280
249
286

FIG. 25
260
265
270
275
305
300
306
235
240
245
285
255
250
280
249
286

FIG. 28
260
265
270
275
305
300
306
235
240
245
255
285
280
249
250
286

FIG. 23
240
252a
252
253
235
253a
335
325
328
340
330

FIG. 26
240
235
252a
253a
328
335
325
252
253
330
340

FIG. 29
240
252a
330
235
328
335
325
253
253a
252
340

FIG. 24
315
318
316
340
317
298
322
337
296
295
297
335
321
320
323

FIG. 27
315
318
316
317
340
298
322
337
296
295
297
335
320
321
323

FIG. 30
315
318
240
316
317
295
298
235
297
320
321
323

FIG. 31

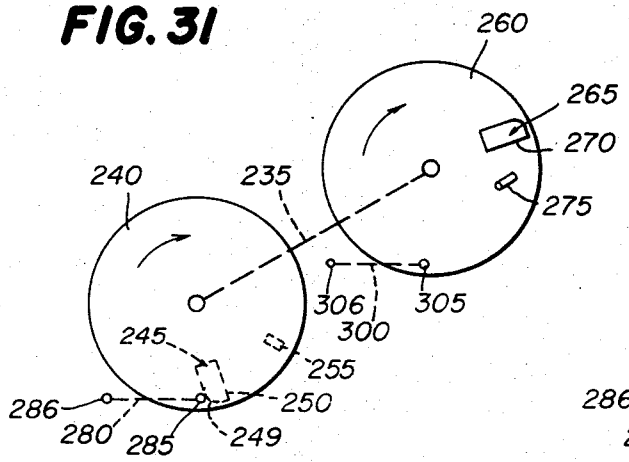

FIG. 34

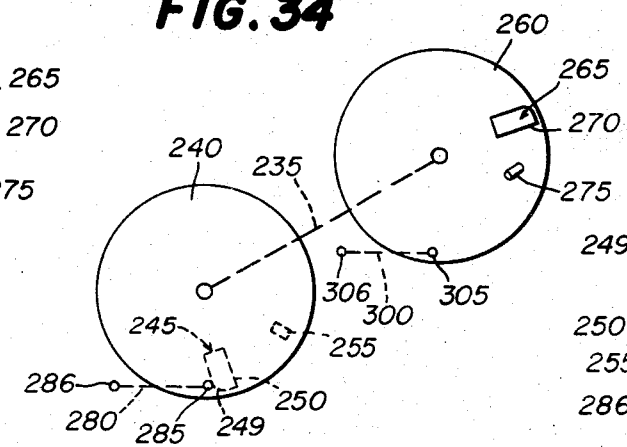

FIG. 37

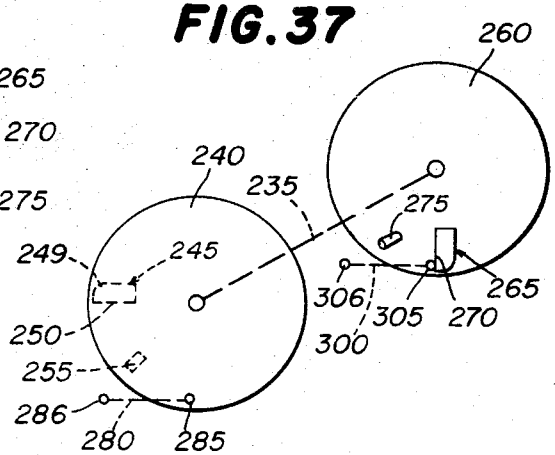

FIG. 32

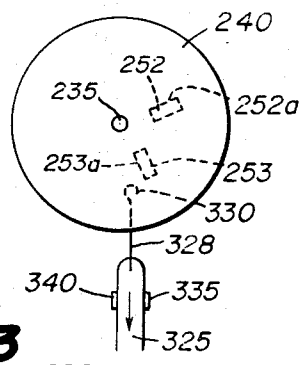

FIG. 35

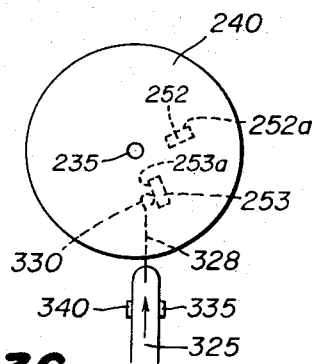

FIG. 38

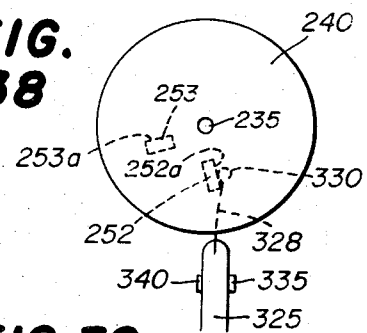

FIG. 33

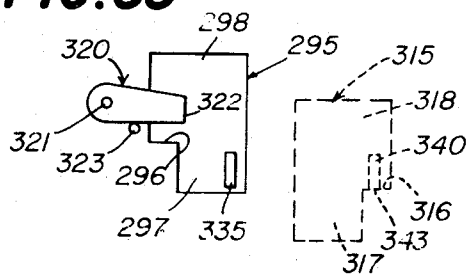

FIG. 36

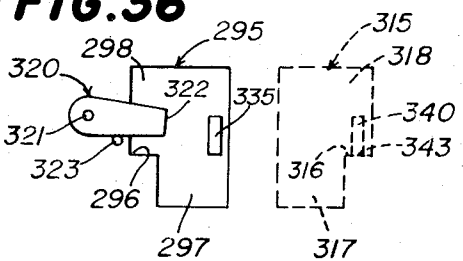

FIG. 39

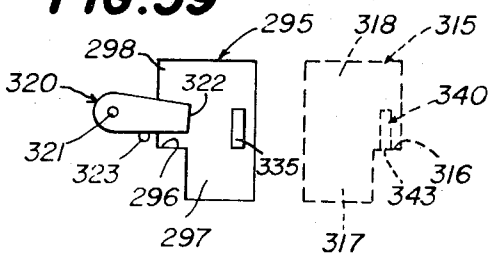

DOOR CONTROL MECHANISM

This invention is directed to a door control mechanism of the type useful with garage doors and the like, and particularly useful in combination with sectional overhead doors.

It is an important object of the present invention to provide an improved combination for use with an associated building having a door-receiving opening therein, the combination comprising first and second tracks for attachment to the associated building respectively adjacent to the sides of the door-receiving opening, a sectional door having a plurality of rollers mounted thereon and engageable in the tracks for movement of the door between a first position with respect to the opening and a second position with respect to the opening, counterbalance mechanism for mounting on the associated building adjacent to the door-receiving opening to counterbalance the door so that the door is biased toward the second position thereof, and door control mechanism for mounting on the associated building and operatively connected to the door for accomplishing manual movement of the door from the first position to the second position followed by automatic movement of the door from the second position to the first position followed by an automatic movement of the door from the first position to the second position and then followed by a manual movement of the door from the second position to the first position.

It is another object of the present invention to provide an improved combination of the type set forth in which the door control mechanism therefor includes first latch mechanism operatively associated with the drive connection and having a door-holding condition for holding the door against the biasing means subsequent to a manual movement of the door to the second position and having a door-releasing condition permitting movement of the door to the first position, a door-driving device for the control mechanism and operative when connected to the drive connection automatically to move the door from the first position thereof to the second position thereof, second latch mechanism having a device-connecting condition for connecting the door-driving device to the associated door to effect automatic operation thereof from the first to the second position thereof and having a device-holding condition for maintaining the door-driving device out of operative connection with the door, whereby selective operation of the second latch mechanism to the device-connecting condition thereof effects automatic movement of the door to the second position thereof and selective operation of the first latch mechanism to the door-releasing condition thereof and the second latch mechanism to the device-holding condition thereof effects automatic movement of the door to the first position thereof.

Another object of the present invention is to provide an improved door control mechanism and an improved combination of the type set forth, in which the door control mechanism includes a drive connection operatively connected to the door, a carrier mounted for movement with respect to the opening and having thereon for movement therewith a first latch member and a drive element, a door-driving device for the door control mechanism and operatively connected to the drive element and having an energy-storing condition and a door-driving condition, a second latch member mounted adjacent to the carrier for engagement with the first latch member, engagement of the first and second latch members holding the door-driving device in the energy-storing condition thereof and disengagement of the first and second latch members placing the door-driving device in the door-driving condition thereof, a third latch member mounted on the drive connection and movable therewith and a fourth latch member mounted adjacent to the carrier for selective engagement with the third latch member, engagement of the third and fourth latch members holding the door in the second position thereof and disengagement of the third and fourth latch members releasing the door for movement to the first position thereof.

Another object of the present invention is to provide an improved combination of the type set forth in which the counterbalance mechanism includes a torsion bar operatively connected to the door.

Another object of the present invention is to provide an improved combination of the type set forth in which the counterbalance mechanism includes a torsion bar operatively connected to the door and serving to counterbalance the door so that the door is biased toward the closed position thereof under the urging of gravity.

Still another object of the present invention is to provide an improved combination of the type set forth in which the door control mechanism includes a door disc operatively connected to the torsion bar for rotation therewith in response to movement of the door.

Still another object of the present invention is to provide an improved door control mechanism and an improved combination of the type set forth in which the door control mechanism includes a first latch member fixedly connected to the door disc for rotation therewith, a second latch member pivotable between a door-holding condition for holding the door in the open position thereof and a door-releasing condition, the second latch member being normally biased to the door-holding condition and engageable in the door-holding condition with the first latch member, the second latch member in the door-releasing condition being out of operative contact with the first latch member carried by the door disc thereby to permit free rotation thereof, a counterbalance disc for the door and having associated therewith an energy-storing device, the counterbalance disc being operative when connected to the door automatically to move the door from the closed position to the open position thereof, a third latch member fixedly connected to the counterbalance disc for rotation therewith, a fourth latch member pivotable between a counterbalance-disc-connecting condition for connecting the counterbalance disc to the door to effect automatic opening thereof and a counterbalance-disc-holding condition for maintaining the counterbalance disc out of operative connection with the door, the fourth latch member in the counterbalance-disc-holding condition thereof being in operative contact with the third latch member to prevent rotation of the counterbalance-disc-connecting condition thereof being out of operative contact with the third latch member thereby to permit rotation of the counterbalance disc.

Another object of the present invention is to provide an improved door control mechanism and an improved combination of the type set forth in which the door control mechanism includes a trigger selectively operable on the first latch mechanism for operating the first latch mechanism between the door-holding condition and the door-releasing condition thereof and selectively operable on the second latch mechanism for operating the second latch mechanism between the device-holding condition and the device-connecting condition thereof.

Another object of the present invention is to provide an improved door control mechanism and an improved combination of the type set forth in which the control mechanism includes a selector comprising a plurality of angularly spaced lugs on the door disc for selectively rendering the trigger operable to change the condition of only one of the second and fourth latch members at one time to cause positive operation of the selected one of the latch members by the trigger.

Another object of the present invention is to provide an improved door control mechanism and an improved combination of the type set forth in which the door control mechanism includes a control element disposed adjacent to the associated building and operatively connected to the trigger to activate the trigger in response to operation of the control element upon a wheeled vehicle entering or exiting from the associated building.

Another object of the present invention is to provide an improved door control mechanism and an improved combination of the type set forth in which the door control mechanism includes controlling elements therefore disposed in front of the door-receiving opening, the door control mechanism being operatively connected to the door for accomplishing selective automatic movement thereof between the closed and open positions of the door, the door control mechanism in the

closed position of the door accommodating both manual opening of the door and automatic opening of the door by actuation of the control element the door control mechanism in the open position of the door accommodating both manual closing of the door and automatic closing of the door by actuation of the control element after manual opening of the door.

A further object of the present invention is to provide an improved combination of the type set forth in which the counterbalance mechanism includes a torsion bar and member journaled thereon for free rotation with respect thereto, a torsion spring surrounding the torsion bar and fixed at one end thereof to the associated building and fixed at the other end thereof the member, drive means mounted to the torsion bar for rotation therewith and adjustment with respect thereto and operatively connected to the member adjustment of the drive means with respect to the torsion bar rotating the member with respect to the torsion bar to adjust the tension in the torsion spring.

The invention, both as to its organization and method of operation, together with further objects and advantages thereof, will best be understood by reference to the following specification taken in connection with the accompanying drawings in which:

FIG. 1 illustrates an automobile in front of a garage having therein a garage door in a door opening therein and including a door control mechanism incorporating the features of the invention;

FIG. 2 is a rear elevational view of the garage door of FIG. 1 as seen in the direction of the arrows along the line 2–2 thereof;

FIG. 3 is a view partly in section of the garage door of FIG. 2 in a closed position taken along line 3–3 thereof;

FIG. 4 is a view partly in section of the garage door shown in FIG. 3 with the door in an open position;

FIG. 5 is an enlarged rear elevational view of the torsion bar and door-opening and closing mechanism shown in FIG. 2;

FIG. 6 is a side elevational view of the torsion spring and worm drive therefor of FIG. 5 as seen in the direction of the arrows along line 6–6 thereof;

FIG. 7 is a sectional view of the torsion spring and worm drive therefor of FIG. 6 taken along line 7–7 thereof;

FIG. 8 is a side elevational view with portions in section of the door disc, the latch assembly therefor, the trigger associated therewith and the hydraulic system for moving the trigger of FIG. 5 as seen in the direction of the arrows along the line 8–8 thereof;

FIG. 9 is a side elevational view of the counterbalance disc and latch therefor of FIG. 5 as seen in the direction of the arrows along the line 9–9 thereof;

FIG. 10 is a perspective view of the door disc latch particularly showing the cam opening therein;

FIG. 11 is a perspective view of the trigger device particularly showing the placement of the latch cams and including a phantom view of the door disc latch showing the spatial relationship between the latch and the trigger;

FIG. 12 is a view in section of the counterbalance disc having a catch thereon in engagement position with the associated latch;

FIGS. 13 to 15 are diagrammatic views showing the relative positions of the door disc, the counterbalance disc, the associated catches, pins and lugs thereon, the trigger and the cam openings in the associated latches when the garage door is closed prior to a manual opening thereof;

FIGS. 16 to 18 are diagrammatic views showing the relative positions of the discs, trigger and latches after the door has been manually opened;

FIGS. 19 to 21 are diagrammatic views showing the relative positions of the discs, trigger and latches when the rear wheels of the automobile are on the actuator;

FIGS. 22 to 24 are diagrammatic views showing the relative position of the discs, trigger and latches when the rear wheels of the automobile clear the actuator;

FIGS. 25 to 27 are diagrammatic views showing the relative positions of the discs, trigger and latches when the front wheels of the automobile are on the actuator;

FIGS. 28 to 30 are diagrammatic views showing the relative positions of the discs, trigger and latches when the front wheels of the automobile clear the actuator and the door is in the automatically closed position thereof;

FIGS. 31 to 33 are diagrammatic views showing the relative positions of the discs, trigger and latches when the front wheels of the automobile are on the actuator and the door begins an automatic opening thereof;

FIGS. 34 to 36 are diagrammatic views showing the relative positions of the discs, trigger and latches when the front wheels of the automobile clear the actuator and the door is in an automatically opened position thereof;

FIGS. 37 to 39 are diagrammatic views showing the relative positions of the discs, trigger and latches when the door has been manually closed; and

FIG. 40 is a perspective view of an alternate embodiment for maintaining the door in an unlatched position after the door has been automatically opened.

There is illustrated herein a garage door **110** and door control mechanism **200** therefor which accommodates movement of the door **110** between the first and second positions thereof, certain of such movements being manually effected and others being automatically effected. As illustrated, the garage door **110** is counterbalanced so that it is urged to the first or closed position thereof, the door control mechanism **200** accommodating manual movement of the door **110** from the first (closed) position to the second (open) position followed by automatic movement thereof from the second (open) to the first (closed) position followed by an automatic movement of the door **110** from the first (closed) to the second (opened) position and then followed by a manual movement of the door **110** from the second (opened) to the first (closed) position.

With reference to the drawings and particularly FIGS. **1** to **4** thereof, there is shown an automobile **100** having two spaced-apart front wheels and two spaced-apart rear wheels **102**, the car **100** being positioned on the ground or driveway **103** in front of a garage **105**. The garage **105** includes two spaced-apart upstanding side walls **106**, a slanted roof or top wall **107**, a front wall **108** interconnecting the two sidewalls **106** and a backwall (not shown). The front wall **108** has centrally located therein a door-receiving opening **109**, the door opening **109** being of sufficient height and width to receive therein an appropriate sectional door **110**.

The sectional door **110** consists of a plurality of sections **111**, four sections **111** being illustrated herein, the sections **111** being identical in dimension and hingedly fastened one to another by means of a plurality of hinges **112**, each of the hinges **112** including two attachment flanges **113** interconnected by a hinge pin **114**, each attachment flange **113** of every hinge **112** is connected to an adjacent section **111** of the door **110**, thereby to hingedly connect the sections **111** of the garage door **110** one to another. As particularly shown, each section **111** of the door **110** is fastened to the adjacent section **111** by three hinges **112**, the hinges **112** being positioned one at each outer edge of the sections **111** and one midway between the outermost hinges **112**. The door **110** is further provided on each of the outer edges thereof adjacent to the bottom of the door with two cable pins **116**, the cable pins **116** being for a purpose hereinafter explained; the door **110** further is provided with a handle **117**, the handle **117** being positioned in the center of the second section **111** from the bottom of the door **110** only for purposes of illustration. As is well known in the art, a handle may be positioned on the inside of the door **110**, but is not here shown.

Adjacent to the outer edges of the door-receiving opening **109** in the front wall **108** of the garage **105** are two tracks **120**, the tracks **120** being spaced apart a distance slightly in excess of the width of the door-receiving opening **109**, the tracks **120** each being channel shaped in cross section and including two spaced-apart sidewalls **121** interconnected by a web **122**. The

tracks 120 each include a substantially vertically extending flight 123 and a substantially horizontally extending flight 124, the two flights 123 and the two flights 124 of the two tracks 120 being generally parallel one to another, each of the flights 123 and 124 being interconnected by an arcuate flight 125. The tracks 120 are connected to the front wall 108 adjacent the bottom of the garage by the usual means (not shown) and the tracks 120 are connected at the rearmost part of the substantially horizontal flight 124 to the garage roof 107 by means of struts 126, each of the tracks 120 being provided with an attachment strut 126. The substantially vertical flights 123 are somewhat diagonally inclined toward the rear of the garage 105, i.e., away from the front wall 108, and the substantially horizontal flights 124 of the tracks 120 are inclined upwardly toward the top 107 of the garage 105, all to facilitate movement of the door 110 in the tracks 120.

The door 110 is provided with a plurality of roller assemblies 130, the roller assemblies 130 each being shown by way of illustration associated with a hinge 112, it being understood that the roller assemblies 130 may be independently placed, if so desired. Each of the roller assemblies 130 includes an L-shaped flange 131 having an abutment portion 132 fixedly connected to one of the attachment flanges 113 of the associated hinge 112, the abutment portion 132 being preferably connected to the flange 113 connected to the upper adjacent section 111 of the door 110, the L-shaped flange 131 further including a transverse portion 133 extending outwardly from the section 111 and carrying on the distal end thereof a stub shaft 134 providing a mounting for a wheel 135, each of the wheels 135 being so sized as to fit between the sidewalls 121 of the tracks 120. As may be seen from the drawings, the four-section door 110 is provided with a total of 10 roller assemblies 130, the roller assemblies 130 providing for rolling action of the door 110 from the closed position thereof to the open position thereof along the tracks 120.

The door 110 is counterbalanced to the closed position, a substantial portion of the weight of the door 110 being counterbalanced by means of a torsion bar 140 and the hardware associated therewith, the torsion bar 140 being a hollow steel tube positioned above the door-receiving opening 109 in the front wall 108 and extending laterally across the opening 109 and spaced slightly above the door 110, all as particularly shown in FIGS. 2 and 5 of the drawings. The torsion bar 140 is secured to the front wall 108 of the garage 105 by means of a left-hand mounting bracket 141, the bracket 141 including an abutment portion 142 extending parallel and fixedly secured to the front wall 108 by means of bolts 143, the bracket 141 further including at one end thereof a transverse portion 145 extending outward from the front wall 108 and carrying a bushing 146 therein to facilitate rotation of the torsion bar 140 with respect thereto. Abutting the bushing 146 is a cable drum 147 fixedly secured to the torsion bar 140 for rotation therewith, the cable drum 147 having thereabout a plurality of spiral grooves 148 and a flange 149 at the inner end of the drum 147. The drum 147 receives in the spiral grooves 148 a cable 150, the cable 150 being fixedly secured at one end to the flange 149 of the drum 147 and on the other end to the left-hand cable pin 116 fastened adjacent to the bottom of the garage door 110.

The torsion bar 140 is further secured to the front wall 108 of the garage 105 by means of a right-hand mounting bracket 151, the bracket 151 including an abutment portion 152 extending parallel and fixedly secured to the front wall 108 by means of bolts 153, the bracket 151 further including at one end thereof a transverse portion 155 extending outward from the front wall 108 and carrying a bushing 156 therein to facilitate rotation of the torsion bar 140 with respect thereto. Abutting the bushing 156 is a cable drum 157 fixedly secured to the torsion bar 140 for rotation therewith, the cable drum 157 having thereabout a plurality of spiral grooves 158 and a flange 159 at the inner end of the drum 157. The drum 157 receives in the spiral grooves 158 a cable 160, the cable 160 being fixedly secured at one end to the flange 159 of the drum 157 and on the other end to the right-hand cable pin 116 fastened adjacent to the bottom of the garage door 110. The cables 150 and 160 provide the necessary connection between the door 110 and the torsion bar 140, thereby to translate rotation of the bar 140 into movement of the door 110 along the tracks 120 between the open position and the closed position.

If the sectional door 110 is for a two-car garage, then the torsion bar 140 will be provided with two torsion springs 165 positioned thereabout and spaced therealong; however, for the sake of brevity and simplicity, only one of the torsion springs 165 is herein illustrated. The torsion spring 165 is positioned about the torsion bar 140 and has at the right end thereof, as seen in FIG. 5, a hook 166. An L-shaped bearing bracket 170 includes an abutment portion 171 extending parallel to and fixedly secured to the front wall 108 of the garage 105 by means of bolts 172, the bracket 170 further including a transverse portion 173 extending outwardly from the front wall 108 toward the rear of the garage 105. The transverse portion 173 has therein an aperture 174 for receiving therein the hook 166 of the torsion spring 165, thereby to secure one end of the torsion spring 165 to the garage 105. A bushing 177 extends through the transverse portion 173 of the bearing bracket 170 to facilitate rotation of the torsion bar 140 with respect to the bracket 170 and to prevent contact between the torsion bar 140 and the torsion spring 165.

At the left-hand end of the torsion spring 165, as particularly seen in FIGS. 5 to 7, there is provided a generally cylindrical worm housing 180 positioned about the torsion bar 140, the housing 180 including an offset body portion 181 forming at the internal ends thereof a shoulder 182, the housing 180 being fixedly secured to the torsion bar 140 by setscrews 183, thereby to provide for rotation of the housing 180 with the torsion bar 140. Adjacent to the end of the offset portion 181 of the housing 180 is a circular groove 184, the groove 184 being for a purpose hereinafter explained, and journaled to the housing 180 is a member or worm gear 185, the worm gear 185 in the form of a wheel 186 carrying about the periphery thereof a plurality of gear teeth 187. The wheel 186 is integral with and extends outwardly from a collar 188, the collar 188 being cylindrical and journaled to the offset body portion 181 of the worm housing 180 for rotation with respect thereto, the collar 188 abutting the shoulder 182 at one end and being held against axial movement along the housing 180 by a retaining ring 194 positioned in the circular groove 184 in the offset portion 181 in the housing 180. The worm gear 185 is provided with a spring retainer or indent 189 in the wheel 186 adjacent to the collar 188, the indent 189 receiving therein a hook (not shown) at the other end of the torsion spring 165, thereby to prevent rotation of the spring 165 with respect to the worm gear 185. There is further provided a worm drive in the form of a hollow shaft 195, the shaft 195 having extending therethrough a square socket hole 196 and having extending therearound spiral flanges 197. The shaft 195 is positioned so that the gear teeth 187 are intermediate the spiral flanges 197 and retained in the aforesaid position by a retention flange 191 including a transverse wall 192 extending from the worm housing 180 and having positioned at either end thereof spaced-apart end flanges 193, the end flanges 193 providing radial and axial support for the shaft 195. It is therefore seen that the torsion spring 165 is fixed at one end thereof with respect to the garage 105 at one end by the hook 166 and bearing bracket 170 and at the other end the torsion spring 165 is prevented against rotation thereof with respect to the worm gear 185 by the indent 189 in the worm gear 185. The usual problems of varying the tension in the torsion spring 165 are avoided by the novel adjustment structure hereinbefore described. The tension of the torsion spring 165 is simply varied by adjustment, either manually or by machine, of the shaft 195 thereby to rotate the worm gear 185 and wind or unwind the spring 165 fixedly connected thereto, the tension in the torsion spring 165 being easily adjusted so as to counterbalance the door 110 slightly less than the total effective

weight of the door **110** so that the door **110** will be biased to the closed position by the action of gravity if the door **110** is released at any point along the tracks **120** and unacted upon by other forces. It being understood that the counterbalance force of the torsion spring **165** is transmitted to the door **110** by the torsion bar **140**, the worm housing **180**, the worm gear **185**, the drums **147** and **157**, the cables **150** and **160** and the cable pins **116**.

With reference to FIGS. **5**, **8–12** and **40** there is shown the door control mechanism **200**. The right-hand end of the torsion bar **140** is provided with a drive connection or drive sprocket **210**; however, while the drive sprocket **210** is located on the right-hand end of the torsion bar **140**, as shown in FIG. **5**, the sprocket **210** may be also located on the left-hand side, it being a mere matter of preference, the drive sprocket **210** being provided with teeth **211** about the periphery thereof and suitably mounted on a jack shaft **212**. The jack shaft **212** is received within a countersunk portion (not shown) of the torsion bar **140** and held in place for rotation therewith by a clamping collar **213** fixedly secured thereabout by bolts **214**.

Disposed below the drive sprocket **210** is a disc enclosure **220**, the disc enclosure **220** being mounted on the front wall **108** of the garage **105** and including an upstanding left-hand sidewall **221** and an upstanding right-hand sidewall **222**, the sidewalls **221** and **222** being spaced apart and joined by a rear wall **223**, each of the sidewalls **221** and **222** having a downwardly extending top edge **226** and a forwardly extending rear edge **227** and a horizontally extending bottom edge **228**. The sidewalls **221** and **222** are of similar shape and parallel to each other, each having therein an aperture (not shown) in registry one with the other, each of the apertures being surrounded by a support flange **229**, the support flanges **229** supporting therein a jack shaft **235**, the jack shaft **235** preferably being made of brass or bronze thereby to avoid the necessity of bushings in the apertures.

Freely rotatable around the jack shaft **235** is a carrier or a door disc **240**, the door disc **240** being positioned with the plane of rotation thereof perpendicular to the front wall **108** of the garage **105** and including a hub **241** positioned about the jack shaft **235** thereby to position the door disc **240** against excessive lateral movement along the shaft **235**. The door disc **240** has around the periphery thereof a plurality of teeth **242**, the number of teeth **242** being about six times the number of teeth **211** on the drive sprocket **210**, the ratio of 6 to 1 being for a purpose hereinafter explained, and interconnecting the door disc **240** and the drive sprocket **210** is a link chain **243**, the link chain **243** engaging the teeth **242** on the door disc **240** and the teeth **211** on the drive sprocket **210**. It will be seen therefore that rotation of the torsion bar **140** upon movement of the door **110** along the tracks **120** produces similar rotation of the drive sprocket **210**. The number of revolutions of the door disc **240** per one complete opening or closing of the door **110** is controlled by the ratio of the teeth **211** on the sprocket **210** to the teeth **242** on the door disc **240**, the ratio being so chosen as to limit the door disc **240** to less than one complete revolution per each complete opening or closing of the door **110**, preferably the door disc **240** rotating about 270°.

On the inside of the door disc **240**, or on the right-hand side thereof as viewed in FIG. **5** there is positioned a catch **245**, the catch **245** being positioned radially outwardly adjacent to the teeth **242** of the door disc **240** and having an attachment surface **246** connected to the door disc **240** by means of bolts **247** and having an offset portion **248** spaced from the door disc **240**. The offset portion **248** has a camming surface **249** on the end of the catch **245** away from the attachment surface **246** and also an abutment surface **250** away from the attachment surface **246**, the edge of the catch **245** forming the abutment surface **250** extending along a radius of the door disc **240**. There is also provided on the inside of the door disc **240** a release lug **252**, the release lug **252** being radially positioned away from the periphery of the disc **240** toward the center of the door disc **240** so as not to interfere with other structure hereinafter explained, the lug **252** having an abutment surface **252***a*, the abutment surface **252***a* being formed by an edge of the lug **252** extending along a radius of the door disc **240**, the angle between the abutment surface **250** of the catch **245** and the abutment surface **252***a* of the lug **252** being less than 270° for the constructional example hereinafter set forth. Positioned between the catch **245** and the lug **252** is a lug **253**, the lug **253** being radially positioned from the center of the door disc **240** identically to the lug **252**, the lug **253** having an abutment surface **253***a* formed by an edge of the lug **253** extending along a radius of the disc **240**, the abutment surface **252***a* and the abutment surface **253***a* forming a selector selectively to operate certain parts as hereinafter explained. Radially outwardly of the lug **253** and secured to the disc **240** is a drive lug **255**, the drive lug **255** being positioned between the lug **252** and the catch **245** so as not to interfere with other structure hereinafter defined and being spaced radially outwardly from the lugs **252** and **253** so as not to interfere with their operation. As hereinbefore stated, since the door disc **240** rotates less than one complete revolution for each door opening or door closing, the drive lug **255** also rotates through less than one complete revolution, thereby, in the particular constructional example illustrated in the drawings, the drive lug **255** rotates through a 270° arc between a door-closed position and a door-open position, so as not to interfere with the operation of the structure cooperating with the catch **245**.

Movement of the door **110** along the tracks **120** results in rotation of the torsion bar **140** and thereby the drive sprocket **210**. The door disc **240** is connected to the drive sprocket **210** by means of the chain **243** operatively associated with the teeth **211** on the drive sprocket **210** and the teeth **242** on the door disc **240**, thereby to translate rotation of the torsion bar **140** into rotation of the door disc **240**, the ratio of the number of teeth **242** on the door disc **240** to the number of teeth **211** on the drive sprocket **210** being sufficiently large so as to provide for less than one complete revolution of the door disc **240** for each complete opening or closing of the door **110**.

There is further provided a door-driving device or a counterbalance disc **260** fixedly secured to the jack shaft **235**, such as by set screws (not shown), the counterbalance disc **260** being positioned parallel to the door disc **240** and rotatable about a common axis, the disc **260** including a hub **261** positioned at the center of the counterbalance disc **260** about the jack shaft **235**, or to the left of the disc **260** as seen in FIG. **5**, the hub **261** preventing excessive lateral movement of the disc **260** along the jack shaft **235**. There is further provided, at the periphery of the counterbalance disc **260** on the right-hand side thereof, as seen in FIG. **5**, a flange **262** having an attachment surface **263** fixedly secured to the counterbalance disc **260** and an offset portion **264** forming a cable groove between the offset portion **264** and the counterbalance disc **260**, the flange **262** thereby providing a groove for a cable for a purpose hereinafter explained. The counterbalance disc **260** further includes a catch **265** positioned on the inside of the disc **260** opposite to the flange **262**, the catch **265** being radially spaced from the center of rotation of the counterbalance disc **260** the same distance as the catch **245**. The catch **265** includes an attachment surface **266** fixedly secured to the counterbalance disc **260** by bolts **267** and an offset portion **268** spaced from the counterbalance disc **260**, the offset portion **268** having a camming surface **269** and an abutment surface **270**, the abutment surface **270** being formed by an edge of the catch **265** extending along a radius of the disc **260**. The counterbalance disc **260** is further provided with a stop pin **273** adjacent to the periphery of the disc **260** at a predetermined angular location, as will hereinafter be explained, and with a latch cam pin **274**, as seen in FIG. **40**, for a purpose hereinafter explained, the latch cam pin **274** being positioned adjacent to the periphery of the counterbalance disc **260** and at a predetermined angle counterclockwise from the abutment surface **270** of the catch **265**, for a purpose hereinafter explained. The counterbalance disc **260** further includes a drive lug **275**, the drive lug **275** being radially positioned from the

center of the counterbalance disc 260 so as to contact the drive lug 255 on the door disc 240 when the drive pin 275 and the drive lug 255 are operatively connected, the drive pin 275 extending transversely of the counterbalance disc 260 for a distance sufficient to contact the drive lug 255 when the lug 255 and the pin 275 are in operative association.

The counterbalance disc 260 is further provided with an energy-storing device in the form of a spring 276, the spring 276 being connected at one end to a cable 277 fitting in the cable groove 264 and secured to the counterbalance disc 260; at the other end, the spring 276 is connected to the front wall 108 of the garage 105 as at 278, as seen in FIG. 4. The force exerted by the spring 276 on the counterbalance disc 260 biases the disc 260 to rotate in the clockwise direction as seen in FIG. 9, the force exerted by the spring 276 being sufficient when added to the force exerted on the door 110 by the torsion bar 140 and spring 165 to drive the door 110 from the closed position to the open position thereof. It may be seen therefore that when the spring 276 is out of operative connection with the door 110, the door 110 is biased toward the closed position thereof due to the fact that the force exerted thereon by the torsion bar 140 and the spring 165 is slightly less than the effective weight of the door 110, but when the spring 276 is operatively connected to the door 110, then the combined forces of the spring 276, the torsion bar 140 and spring 165 are sufficient to overcome the effective weight of the door 110, thereby to raise the door 110 from the closed position to the opened position thereof and to maintain the door 110 in the opened position.

As best seen in FIGS. 8 to 12, there is provided a door disc latch 280, the door disc latch 280 being generally channel-shaped and having an outer sidewall 281 adjacent to the door disc 240 and an inner sidewall 282 spaced from the outer sidewall 281 and generally parallel thereto, interconnecting the sidewalls 281 and 282 is a web 283, the web 283 being disposed generally horizontally. The door disc latch 280 may be tapered with the narrowest part adjacent to the rear wall 223 of the disc enclosure 220 of the latch 280 may be uniform in width, as shown, the door disc latch 280 having at the front end thereof near the front wall 108 of the garage 105 aligned apertures 284 in each of the sidewalls 281 and 282, and toward the rear end of the latch 280, that is away from the front wall 108 of the garage 105, there is a latch pin 285 rotatably mounted on a pin extending between the sidewalls 281 and 282, the offset portion 248 of the catch 245 fitting between the sidewalls 281 and 282 of the latch 280 to provide for contact between the catch 245 and latch pin 285. The door disc latch 280 is pivotally mounted to the left-hand sidewall 221 of the disc enclosure 220 by a pivot 286 extending through the aligned apertures 284 in the sidewalls 281 and 282 of the latch 280, thereby to provide up and down pivotal movement of the latch 280. The latch 280 is biased in an upward position by means of a spring 287 connected at one end to a tongue 288 extending from the rear wall 223 of the disc enclosure 220 and at the other end, the spring 287 is connected to the latch 280 thereby to bias the latch 280 to a horizontal position. There is further provided on the wall 221 a stop lug 289, the lug 289 being positioned to engage a stop pin 254 on the door disc 240, for a purpose hereinafter explained.

In an alternate embodiment of the door disc latch 280, there is provided a transversely extending flange 291, as seen in FIG. 40, extending from the inner sidewall 282 of the latch 280 toward the counterbalance disc 260, the flange 291 having upwardly extending therefrom a camming surface 292 for operative camming contact with the latch cam pin 274 on the counterbalance disc 260, all for a purpose hereinafter explained. The alternate embodiment of the door disc latch 280 obviates the necessity for the stop lug 289 and the associated stop pin on the door disc 240 in the first embodiment. The purpose of these two structures is to prevent the door 110 from being locked in the open position after the door 110 has been automatically opened, thereby to allow the door to be closed without activation of the door disc latch 280, all as hereinafter explained.

The door disc latch 280 further includes a cam opening 295, the cam opening 295 being positioned toward the rear of the latch 280, that is to the left as seen in FIG. 8, the cam opening 295 being generally L-shaped and having an abutment surface 296, a lower leg 297 and a forwardly extending leg 298. Positioned adjacent to the forwardly extending leg 298 of the cam opening 295 is a pawl 320, the pawl 320 being pivotally mounted on the inner wall 282 of the latch 280 as by a pivot 321, the pawl 320 having an end abutment surface 322 extending into the forward leg 298 of the cam opening 295, the pawl 320 having associated therewith a rest pin 323 positioned below the pawl 320, thereby normally to maintain the pawl 320 in the horizontal position, the pin 323 being fixedly secured to the wall 282 of the latch 280.

Parallel to and spaced from the door disc latch 280 is a counterbalance disc latch 300, the counterbalance disc latch 300 being generally channel-shaped and having an outer sidewall 301 adjacent to the counterbalance disc 260 and an inner sidewall 302 spaced from and parallel to the outer sidewall 301; interconnecting the sidewalls 301 and 302 is a web 303, the web 303 being generally disposed horizontally. Toward the front of the counterbalance disc latch 300, that is to the left as viewed in FIG. 9, there is an aperture 304 in each of the sidewalls 301 and 302, the apertures 304 being aligned to receive a pivot 306 to provide for up and down movement of the latch 300, the pivot 306 being connected to the right-hand wall 222 of the disc enclosure 220. Toward the rear of the latch 300, there is a latch pin 305 freely rotatably mounted on a pivot between the walls 301 and 302, the latch pin 305 being normally positioned in alignment with latch pin 285 when the latch 280 and the latch 300 are horizontally disposed. The latch 300 is biased to a horizontal position by a spring 307, the spring 307 being connected at one end to a tongue 308 extending from the rear wall 223 of the disc enclosure 220 and at the other end, the spring 307 is connected to the latch 300. There is further provided on the wall 222 a stop lug 309, the stop lug 309 cooperating in its operative position with the stop pin 273 on the counterbalance disc 260, thereby to halt clockwise rotation of the counterbalance disc 260 before the catch 245 on the door disc 240 latches with the latch pin 285 on the door disc latch 280, thereby to lock the door 110 into an open position after an automatic opening thereof, all as hereinafter explained. The stop pin 273 and the stop lug 309 are not required if the alternate embodiment of the latch 280 shown in FIG. 40 is employed.

Toward the rear of the inner wall 302 of the latch 300 is a cam opening 315, the cam opening 315 being generally spaced across from the cam opening 295 in the door disc latch 280, the cam opening 315 being positioned differently as hereinafter explained. The cam opening 315 in the latch 300 is generally L-shaped and has an abutment surface 316, a lower leg 317 and a rearwardly extending leg 318. It is here noted that the cam opening 315 has a leg 318 extending to the rear of the latch 300, that is away from the front wall 108 of the garage 105, while the door disc latch 280 has a cam opening 295 therein which has a leg 298 extending toward the front of the latch 280, that is toward the front wall 108 of the garage 105, the two cam openings 295 and 315 being so positioned and aligned for a purpose hereinafter explained.

As stated before, the door disc latch 280 is generally parallel to and spaced apart from the counterbalance latch 300, and there is provided therebetween an actuator or a trigger 325, the trigger 325 selectively operating the latches 280 and 300 and being disposed also between the door disc 240 and the counterbalance disc 260, the trigger 325 including a vertically extending body portion 327 in the form of a slab disposed generally parallel to the sidewalls of the latches 280 and 300. At the bottom end of the body portion 327 is a pivot hole 326 and at the top of the body portion 327 of the trigger 325 is a leaf spring 328 extending upwardly from the body portion 327, the leaf spring 328 terminating at its upper end in

a cam follower **330** in the form of a split cylinder, the cam follower **330** being in position to be moved by contact with the abutment surfaces **252***a* and **253***a* for a purpose hereinafter set forth. Spaced below the leaf spring **328** and extending outward therefrom at a 90° angle to the body portion **327** of the trigger **325** is a door disc latch cam **335**, the door disc latch cam **335** having two parallel and opposed sidewalls **336**, a top wall **337** and a bottom wall **338**. Extending at an angle of 90° outward from the body portion **327** of the trigger **325** is a counterbalance disc latch cam **340**, the cam **340** extending at an angle of 180° from the cam **335**, the cam **340** including two spaced-apart sidewalls **341**, a top wall **342**, and a bottom wall **343**. The cam **340** and the cam **335** are positioned at the same vertical point along the trigger **325**, the cams **335** and **340** respectively fitting within and extending through the cam openings **295** and **315** in the respective latches **280** and **300**.

It will be seen therefore that when the latches **280** and **300** are in their normal horizontal position, the abutment surfaces **250** and **270** of the catches **245** and **265** will be in contact with the latchpins **285** and **305** of the associated latches **280** and **300** if the door disc **240** or the counterbalance disc **260** is in the proper angular position. When the latches **280** and **300** are depressed out of their normal horizontal position, then the discs **240** and **260** may rotate without contacting the latches **285** and **305**. The latch **280** is therefore pivotable between a door-holding condition in which the latch pin **285** is in operative contact with the abutment surface **250** of the catch **245** thereby to maintain the door **110** against movement thereof and a door-releasing condition when the latch pin **285** is out of operative contact with the catch **245** thereby to allow movement of the door **110** in the tracks **120** between the above mentioned first and second positions. The latch **300** is also therefore pivotable between a device or counterbalance-disc-connecting condition in which the latch pin **305** is out of operative connection with the catch **265** thereby to operatively connect the spring **276** to the door **110** and effect movement thereof from the closed to the open position thereof and a device or counterbalance-disc-holding condition in which the catch **265** is in operative connection with the latch pin **305**, thereby to hold the spring **276** in the energy-storing position thereof out of operative connection with the door **110**; the device-holding condition of the latch **300** may also be termed as energy-storing condition due to the energy-storing condition of the spring **276** when the disc **260** is held against rotation thereof. When the trigger **325** is in the position shown in FIG. **8**, the cams **335** and **340** are positioned within the associated cam openings **295** and **315**, but are not in contact with any of the surfaces defined thereby and the cam follower **330** is in position to be contacted by the selector formed of either the abutment surface **252***a* of the release lug **252** or the abutment surface **253***a* of the release lug **253** to bias the cam follower **330** toward or away from the front wall **108**, thereby to move the cams **335** and **340** in the cam openings **295** and **315**, respectively.

Vertical, that is both up and down, displacement of the trigger **325** may be achieved by a plurality of means well known in the art; for instance, the trigger **325** may be operatively connected to a solenoid which may be key actuated or radio control actuated, operation of which would produce vertical displacement of the trigger, but in the drawings there is shown a hydraulic device **350** for operating the trigger **325**. The hydraulic device **350** includes a cylinder **351** having sealably and slidably disposed therewithin a piston **352**. A spring **353** is positioned between the bottom of the cylinder **351** and the piston **352**, thereby to bias the piston **352** towards the top of the cylinder **351**, the piston **352** having extending upwardly therefrom a stem **354** containing therein a pivot **355** extending through the pivot hole **326** in the body portion **327** of the trigger **325**, thereby operatively to connect the piston **352** with the trigger **325**, a suitable fitting **356** being disposed about the piston stem **354** thereby to seal the hydraulic fluid **366** in the cylinder **351**. The cylinder **351** is further provided with an aperture **360** therein, the aperture **360** being surrounded by a suitable fitting **361** exterior of the cylinder **351** and sealably connected to an elbow **362**, thereby to provide a sealed connection between the cylinder **351** and the elbow **362**. Connected to the elbow **362** is a flexible hose **363**, the hose **363** extending downwardly from the hydraulic cylinder **351** and out of the garage **105**, as shown in FIG. **1**, to a control element or an actuator **365** extending transversely across the driveway **103**, thereby to be contacted by the front wheels **101** and the rear wheels **102** of the automobile **100** as it proceeds into or out of the garage **105**. It being seen that the introduction of hydraulic fluid into the cylinder **351** by depression of the actuator **365** will force the piston **352** downwardly thereby carrying therewith the trigger **325** and hence the associated cams **335** and **340**. Upon release of the actuator **365** by removal of the wheels **101** or **102** of the automobile **100**, hydraulic fluid **366** is forced out of the cylinder **351** by the action of the spring **353** against the piston **352** thereby raising the trigger **325** to its normal position and thereby also the cam follower **330** and the lugs **335** and **340**.

The operation of the door **110** through a complete cycle consisting of a manual door opening, followed by an automatic door closing, followed by an automatic door opening, followed by a manual door closing will hereinafter be explained. As an example of the structure described above the door **110** may be 7 feet in height and the disc **240** be adapted to rotate through 270° for a complete door-opening or a complete door-closing by making the number of teeth **242** on the disc **240** six times greater than the number of teeth **211** on the sprocket **210**. The angular and radial position of the lugs **252**, **253** and **255** depend on the degree of rotation of the disc **240**, the position of the catch **245** and the cam follower **330**. It being understood that certain angles, such as the 90° angle between the abutment surfaces **252***a* and **253***a* and others hereinafter described are variable depending upon the angle through which the door disc **240** rotates for one complete opening or closing operation. In the particular example, there is about a 7° angular difference between the abutment surface **250** of the catch **245** and the camming surface **249** of the catch **245**. This 7° difference is important in preventing the door disc **240** from being latched when the door **110** has been automatically opened. As hereinbefore stated there are shown two structures to prevent the door disc **240** from being latched when the door **110** is being automatically opened. With the first embodiment, the stop pin **273** on the counterbalance disc **260** is located about 263° in the counterclockwise direction from the abutment surface of the stop **309**, that is when the counterbalance disc **260** has rotated 263° in the clockwise direction, as viewed in FIG. **9**, the stop pin **273** contacts the stop **309** thereby to prevent further rotation of the counterbalance disc **260**. The drive pin **275** is so located on the counterbalance disc **260** that when the door **110** is to be automatically opened by release, as hereinafter explained, by rotation of the counterbalance disc **260**, the drive pin **275** immediately contacts the drive lug **255** on the door disc **240** and carries the door disc **240** with the counterbalance disc **260**. It may be seen therefore, that when the stop pin **273** has rotated through an angle of 263° it contacts the stop lug **309** to halt rotation of the counterbalance disc **260** and since the door disc **240** has also rotated through an angle of 263° , the catch **245** will also have been rotated through an angle of 263°, thereby to position the camming surface **249** of the catch **245** on the latch pin **285** rather than having the catch **245** pass the pin **285** and having the abutment surface **250** positioned against the latch pin **285**, as in FIG. **13**.

The alternate embodiment shown in FIG. **40** also provides for the catch **245** to be unlatched when the door **110** has been automatically opened. In this embodiment, the camming surface **292** on the flange **291** is contacted by the latch cam pin **274** when the counterbalance disc has rotated through 263° of rotation, thereby to depress the latch **280** and to prevent contact of the abutment surface **250** of the catch **245** with the latch pin **285** carried by the latch **280** and to prevent latching of the door disc **240** thereby. In the first example, the door

110 is stopped before it is in the fully opened position during an automatic opening operation while in the second example or embodiment the door 110 is fully opened, but the latch 280 is depressed during the last 7° of rotation of the door disc 240 to prevent contact of the abutment surface 250 of the catch 245 with the latch pin 285 of the latch 280, the latter embodiment is preferred.

With reference to the diagrammatic views shown in FIGS. 13 to 39, inclusive, FIGS. 13, 16, 19, 22, 25, 28, 31, 34 and 37 show the angular relationship between the door disc 240 and the counterbalance disc 260 at various times in the door opening and closing cycles, the discs 240 and 260 are viewed from the left of the disc enclosure 220 as seen in FIG. 5. Therefore, the door disc 240 is viewed from one side in the above-mentioned series of figures and it is viewed from the other side in FIG. 8, thereby rotation of the disc 240 in a clockwise direction in the diagrammatic views corresponds to a counterclockwise rotation of the disc 240 in FIG. 8. The disc 260 is viewed from the same side in the aforementioned diagrammatic views as in FIG. 9, and thereby clockwise rotation in the aforementioned diagrammatic views corresponds to clockwise rotation in FIG. 9. FIGS. 14, 17, 20, 23, 26, 29, 32, 35 and 38 in the diagrammatic views show the angular relationship between the lugs 252 and 253 and the cam follower 330 connected to the trigger 325. Since the door disc 240 is viewed from the left-hand side as seen in FIG. 5 in the last above mentioned diagrammatic views and the door disc 240 as viewed from the right-hand side as seen in FIG. 8, the positions of the lugs are reversed, the views being no more than a mirror image, thereby clockwise rotation of the disc 240 in the diagrammatic views corresponds to counterclockwise rotation of the disc 240 in FIG. 8. FIGS. 15, 18, 21, 24, 29, 30, 33, 36 and 39 in the diagrammatic views show the relationship of the cam openings 295 and 315 in the latches 280 and 300, respectively, with the cam lugs 335 and 340 connected to the trigger 325, the cam opening 295 being viewed from the left side of the disc enclosure 220 as is the door disc 240 in the diagrammatic views, thereby the forwardly extending leg 298 of the cam opening 295 points to the left in the diagrammatic views whereas the leg 298 points to the right in FIG. 8. The cam opening 315 shown in phantom in the diagrammatic views has the rearward extending leg 318 extending to the right in the diagrammatic views corresponding to the direction thereof in FIG. 9.

FIGS. 13, 14 and 15 show the angular and spatial relationships between the door disc 240, the counterbalance disc 260, the trigger 325, the latch 280 and the latch 300 after the door 110 has been manually closed and before the door 110 is manually opened. In these diagrammatic views, the biasing of the cam follower 330 to the right, as shown in FIG. 14, corresponds to biasing the cam follower 330 toward the rear of the garage 105, that is away from the front wall 108 as shown in FIG. 8. The angular positions of the discs 240 and 260 in FIGS. 8 and 9 correspond to the angular positions of the discs 240 and 260 in the diagrammatic view 13, whereby it is seen that the biasing of the lugs 335 and 340 to the right as seen in FIG. 15 corresponds to a biasing of the lug 335 and 340 toward the rear of the garage 105 as shown in FIG. 8. When the door 110 is in the closed position, the catch 245 is disengaged from the latch 285 and the abutment surface 252*a* of the lug 252 contacts the cam follower 330 and biases the trigger 325 to the right as shown in the diagrammatic views. The catch 265 on the counterbalance disc 260 is positioned so that abutment surface 270 of the catch 265 contacts the latch pin 305 of the latch 300, thereby to prevent rotation of the counterbalance disc 260 in the clockwise direction due to the spring 277 being extended and exerting a force on the disc 260. The trigger 325 is in its uppermost position thereby to position the lugs 335 and 340 in substantially the vertical center of the lug openings 295 and 315, respectively, and slightly above the abutment surfaces 296 and 316, respectively.

With reference to FIGS. 16 to 18, inclusive, upon a manual opening of the garage door 110, rotation of the torsion bar 140 and thereby the drive sprocket 210 rotates the door disc 240 through 270° until the camming surface 249 of the catch 245 contacts the latch pin 285, thereby to depress the latch 280 so that the catch 245 may pass thereby. After the camming surface 249 has passed the latch pin 285, the latch 280 returns to its biased position due to the spring 287, thereby to contact the abutment surface 250 of the catch 245 and to prevent rotation of the door disc 240 in the counterclockwise direction and thereby to latch the door 110 in the open position, it being remembered that the door disc 240 is always operatively connected to the door 110 and rotation of the disc 240 always corresponds to movement of the door 110 in the tracks 120. The counterbalance disc 260 is maintained in the position shown in FIG. 13 due to the latch pin 305 being in contact with the abutment surface 270 of the catch 265, thereby to prevent clockwise rotation of the disc 260, the rotation of the door disc 240 not affecting the counterbalance disc 260 because the disc 240 is journaled for free rotation about the jack shaft 235 and the drive lug 255 on the door disc 240 rotates away from the drive pin 275 thereby not to contact the same. Rotation of the disc 240 through 270°causing the lugs 253 and 252 to assume the positions shown in FIG. 17, wherein the abutment surface 253*a* of the lug 253 contacts the cam follower 330 of the trigger 325 thereby to bias the trigger 325 to the left as seen in FIG. 17. Due to the angular position of the lug 253 and abutment surface 253*a* thereon, the latch pin 335 abuts the abutment surface 322 of the pawl 320 and is prevented from further movement to the left of the cam opening 295, as seen in FIG. 18, by the pawl 320, it being noted that the cams 335 and 340 are in the approximate vertical center of the cam openings 295 and 315 respectively, but above the abutment surfaces 206 and 316, due to the fact that the trigger 325 is in its uppermost position. When the door 110 has been manually opened, the abutment surface 250 of the catch 245 is in contact with the latch pin 285 and serves to prevent the door 110 from closing due to the action of gravity as it normally would, the door 110 being biased to the closed position thereof because the tension in the torsion spring 165 is adjusted to produce a force slightly less than the effective weight of the door 110 thereby to cause the door 110 to close upon the release thereof; however, the operative condition of the latch mechanism including the abutment surface 250 of the catch 245 with the latch pin 285 prevents the closing of the door 110 because the door 110 is operatively connected through the torsion bar 140, the drive sprocket 210 and chain 243 to the door disc 240.

With reference to FIGS. 19 to 21, as the automobile 100 is backed out of the garage 105, the rear wheels 102 back onto the actuator 365 thereby causing hydraulic fluid 366 to force the piston 352 downwardly in the cylinder 351, and to carry the trigger 325 downwardly to the position shown in FIG. 20; however, since the latch cams 335 and 340 are positioned so that they are pulled down into the lower legs 297 and 317 of the cam openings 295 and 315, respectively, the downward movement of the trigger 325 has no effect on the position of the door disc 240 and the counterbalance disc 260 and thereby no effect on the position of the door 110.

With reference to FIGS. 22 to 24, as the rear wheels 102 of the automobile 100 clear the actuator 365, the spring 353 in the cylinder 351 forces the piston 352 upwardly thereby to move the trigger 325 upwardly to the position it occupied in FIG. 20. Since the lug 253 is in the same position in FIG. 23 as it is in FIG. 20 the cam 330 and thereby the trigger 325 will be biased to the left as the trigger 325 rises to its upward position and the door disc latch cam 335 will rise underneath the pawl 320, thereby pivoting the pawl 320 about the pivot 321 so that the door disc latch cam 335 will be positioned on the abutment surface 296 of the cam opening 295. It is seen, therefore, that the difference in the positions of the door disc latch cam 335 between FIGS. 18 and 24 is due not to a difference in the angular position of the door disc 240 or the vertical position of

the trigger 325, but due to the fact that a trigger action has intervened which allows the door disc latch cam 335 to approach the pawl 320 from the underside thereof, thereby to pivot the pawl 320 about the pivot 321 and position the door disc latch cam 335 on the abutment surface 296 of the cam opening 295.

With reference to FIGS. 25 to 27, when the front wheels 101 of the automobile 100 back onto the actuator 365, the trigger 325 is moved downwardly as hereinbefore described, and because the door disc latch cam 335 is not positioned on the abutment surface 296, the door disc latch 280 is pivoted downwardly out of the horizontal position against the biasing of the spring 287. When the door disc latch 280 has been pivoted downwardly due to the action of the trigger 325 in response to the action of the actuator 365, the latch pin 285 is carried away from the abutment surface 250 of the catch 245 and the door 110 which is biased to the closed position now being free to move in the tracks 120 because the disc 240 can rotate, will close, thereby causing the door disc 240 to rotate through 270°to assume the angular position shown in FIG. 13 and FIG. 8. The counterbalance disc 260 does not move from the position it has heretofore assumed because depression of the trigger 325 has no effect on the counterbalance disc latch 300 due to the fact that the counterbalance disc latch cam 340 is positioned in the lower leg 317 of the cam opening 315 in the latch 300 and thereby, the latch pin 305 remaining in contact with the abutment surface 270 of the catch 265 to prevent rotation of the counterbalance disc 260 in a clockwise direction.

With reference to FIGS. 28 to 30, when the front wheels 101 of the automobile 100 clear the actuator 365, the trigger 325 is moved upwards to its normal position, thereby to position the cam follower 330 so as to be biased to the right by the abutment surface 252*a* of the lug 252 on the door disc 240 as shown in FIG. 29, and also in FIG. 13, thereby to move the door disc latch cam 335 and the counterbalance disc latch cam 340 to the right, as shown in FIG. 30, so that the counterbalance disc latch cam 240 rests on the abutment surface 316 of the cam opening 315, all as shown in FIG. 13. It is here noted that the position of the discs 240 and 260, and the cams 335 and 340 are the same when the door 110 is closed, whether by a manual operation or an automatic operation.

With reference to FIGS. 31 to 33, when the automobile 100 approaches the garage 105, the front wheels 101 hit the actuator 365, thereby moving the trigger 325 downwardly, as shown in FIGS. 32 and 33. Since the counterbalance disc latch cam 340 is positioned on the abutment surface 316, downward movement of the trigger 325 results in pivotal movement of the latch 300 about the pin 306, thereby causing disengagement of the abutment surface 270 of the catch 265 with the latch pin 305 to permit rotation of the counterbalance disc 260 in the clockwise direction due to the force exerted thereon by the spring 276 which has been under tension. With the drive pin 275, the drive lug 255 and the stop pin 273 angularly positioned as shown in FIGS. 8 and 9, as the counterbalance disc 260 rotates in the clockwise direction, the drive pin 275 contacts the drive lug 255, thereby to carry the door disc 240 and thereby the door 110 operatively connected thereto in a clockwise direction through 263° of rotation before the stop pin 273 hits the stop lug 309. If, as explained hereinbefore, the alternate embodiment of FIG. 40 is employed, the discs 240 and 260 will rotate a full 270° to the automatically opened position because the latch 280 will be depressed due to the flange 291, cam surface 292 and latch cam pin 274 to prevent the latch roller 285 from engaging the catch 245.

It is here noted that when the door 110 has been automatically opened there is no need to latch the door 110 in the open position to prevent the closing thereof due to gravity, as is needed after a manual opening because the added force of spring 276 is sufficient with the torsion bar 140 and spring 165 to maintain the door 110 open. Actually it is desirable not to latch the door 110 after an automatic opening thereof to allow a manual closing thereof without the necessity of releasing the latch 280 and catch 245, there being shown herein two embodiments for preventing such latching, that shown in FIGS. 8, 9 and the diagrammatic views and that shown in FIG. 40.

Therefore, as shown in FIG. 31, after an automatic door opening, the door disc 240 is positioned with the camming surface 249 of the catch 245 in contact with, or close to, the latch pin 285 of the latch 280, thereby preventing latching of the door 110 in the open position while the counterbalance disc 260 has rotated through an angle somewhat less than 270°, thereby to position the catch 265 in the position shown. The lugs 253 and 252 have rotated with the door disc 240 to the position shown, the position of lug 253 being several degrees away from the position it would assume if the door had been manually opened with the catch 245 locked against the latch 285 as seen in FIG. 13.

With reference to FIGS. 34 to 36, when the front wheels 101 of the automobile 100 clear the actuator 365, the piston 352 in the cylinder 351 is moved upwardly by action of the spring 353 to position the cam follower 330 in the position shown in FIG. 35. As will be noticed, due to the displacement of cam 253, the spring 328 and cam follower 330 is not biased to the right as shown in FIG. 17 when the door has been manually opened, but rather the trigger 325 is unbiased and the cams 335 and 340 assume the position as shown. There is no movement of either the door disc 240 or the counterbalance disc 260 during the upward movement of the trigger 325 as the front wheels 101 clear the actuator 365.

The door 110 is thereafter manually closed and in so doing, the door disc 240 and the counterbalance disc 260 are rotated in a counterclockwise direction to a final position shown in FIG. 37 due to the movement of the door 110 to the closed position and the transmittal of that movement through the torsion bar 140 and drive sprocket 210 to the door disc 240, the counterbalance disc 260 being carried in the counterclockwise direction by the contact between the drive lug 255 and the drive pin 275. It is seen, therefore, that it is necessary to have the drive pin 275 and the drive lug 255 abutting when the door 110 is in the closed position, so that during a manual closing of the door, the drive lug 255 moves the counterbalance disc 260 in the counterclockwise direction to extend the spring 276 and to position the abutment 270 of the catch 265 in latching position with the latch pin 305 of the latch 300. The latch 300 being depressed when the camming surface 269 of the catch 265 contacts the latch pin 305 and the latch 300 being raised to the normal or horizontal position by the spring 307 after the catch 265 has passed thereby to assume the latching position with the latch pin 305 in contact with the abutment surface 270 of the catch 265. After this operation, the door disc 240 and the counterbalance disc 260 are in the same positions as shown in FIG. 13, and the door 110 is ready for a manual opening thereof as hereinbefore explained.

The invention hereinbefore set forth is readily adaptable to be manufactured in a kit form, the kit including, for instance, all the mechanism carrying a reference numeral 200 or greater.

In view of the foregoing, it is apparent that there has been provided an improved door control mechanism and an improved combination for use with an associated building having a door-receiving opening therein for shiftably and pivotally operating a sectional door between the closed position and the open position thereof. While there has been described what is at present considered to be the preferred embodiment of the invention, it will be understood that various modifications may be made therein and it is intended to cover in the appended claims all such modifications as fall within the true spirit and scope of the invention.

What is claimed is:

1. The combination for use with an associated building having a door-receiving opening therein, said combination comprising: first and second tracks for attachment to the associated building respectively adjacent to the sides of the

door-receiving opening, a sectional door having a plurality of rollers mounted thereon and engageable in said tracks for movement of said door between a first position with respect to the opening and a second position with respect to the opening, counterbalance mechanism for mounting on the associated building adjacent to the door-receiving opening to counterbalance said door so that said door is biased toward the first position thereof, and door control mechanism for mounting on the associated building and operatively connected to said door, said door mechanism including means selectively operable between a door-holding condition for holding said door against the biased first position thereof and a door-releasing condition permitting movement of said door to the first position thereof for accommodating manual movement of said door from said first position to said second position followed by automatic movement of said door from said second position to said first position followed by an automatic movement of said door from said first position to said second position and then followed by a manual movement of said door from said second position to said first position.

2. The combination set forth in claim 1, wherein said second position of said door is an open position with respect to the opening and said first position of said door is a closed position with respect to the opening.

3. The combination for use with an associated building having a door-receiving opening therein, said combination comprising first and second tracks for attachment to the associated building respectively adjacent to the sides of the door-receiving opening, a sectional door having a plurality of rollers mounted thereon and engageable in said tracks for movement of said door between a first position and a second position with respect to the opening, counterbalance mechanism for mounting on the associated building adjacent to the door-receiving opening to counterbalance said door so that said door is biased toward the first position thereof, a door control mechanism for mounting on the associated building and including a drive connection operatively connected to said door, first latch mechanism operatively associated with said drive connection and having a door-holding condition for holding said door against said biasing means subsequent to a manual movement of said door to said second position and having a door-releasing condition permitting movement of said door to said first position, a door-driving device for said control mechanism and operative when connected to said drive connection automatically to move said door from the first position thereof to the second position thereof, second latch mechanism having a device-connecting condition for connecting said door-driving device to the associated door to effect automatic operation thereof from the first to the second position thereof and having a device-holding condition for maintaining said door-driving device out of operative connection with the door, whereby selective operation of said second latch mechanism to the device-connecting condition thereof effects automatic movement of said door to the second position thereof and selective operation of said first latch mechanism to the door-releasing condition thereof and said second latch mechanism to the device-holding condition thereof effects automatic movement of said door to the first position thereof.

4. The combination set forth in claim 3, wherein said first position of said door is a closed position with respect to the opening and said second position is an open position with respect to the opening.

5. The combination for use with an associated building having a door-receiving opening therein, said combination comprising first and second tracks for attachment to the associated building respectively adjacent to the sides of the door-receiving opening, a sectional door having a plurality of rollers mounted thereon and engageable in said tracks for movement of said door between a first position and a second position with respect to the opening, counterbalance mechanism for mounting on the associated building adjacent to the door-receiving opening to counterbalance said door so that said door is biased toward the first position thereof, a door control mechanism for mounting on the associated building and including a drive connection operatively connected to said door, a carrier mounted for movement with respect to the opening and having thereon for movement therewith a first latch member and a drive element, a door-driving device for said door control mechanism and operatively connected to said drive element and having an energy-storing condition and a door-driving condition, a second latch member mounted adjacent to said carrier for engagement with said first latch member, engagement of said first and second latch members holding said door-driving device in the energy-storing condition thereof and disengagement of said first and second latch members placing said door-driving device in the door-driving condition thereof, a third latch member mounted on said drive connection and movable therewith and a fourth latch member mounted adjacent to said carrier for selective engagement with said third latch member, engagement of said third and fourth latch members holding said door in the second position thereof and disengagement of said third and fourth latch members releasing said door for movement to the first position thereof, whereby disengagement of said first and second latch members effecting automatic movement of said door to said second position and engagement of said first and second latch members together with disengagement of said third and fourth latch members effecting automatic movement of said door to said first position thereof and engagement of said third and fourth latch members holding said door in the second position thereof.

6. The combination set forth in claim 5, wherein said first position of said door is a closed position with respect to the opening and said second position of said door is an open position with respect to the opening.

7. The combination for use with an associated building having a door-receiving opening therein, said combination comprising first and second tracks for attachment to the associated building respectively adjacent to the sides of the door-receiving opening, a sectional door having a plurality of rollers mounted thereon and engageable in said tracks for movement of said door between a first position and a second position with respect to the opening, counterbalance mechanism for mounting on the associated building adjacent to the door-receiving opening and including a torsion bar operatively connected to said door, said counterbalance mechanism serving to counterbalance said door so that said door is biased toward the second position thereof, and door control mechanism for mounting on the associated building adjacent to one of said tracks and operatively connected to said torsion bar, said door control mechanism including means selectively operable between a door-holding condition for holding the door against the biased second position thereof and a door-releasing condition permitting movement of said door to the second position thereof for accomplishing selective automatic movement of said door from the first position to the second position thereof subsequent to manual operation of the door from the second position to the first position thereof and automatic movement of said door from said second position to said first position thereof followed by manual movement of said door from the first position to the second position thereof.

8. The combination set forth in claim 7, wherein said first position of said door is an open position with respect to the opening and said second position of said door is a closed position with respect to the opening.

9. The combination for use with an associated building having a door-receiving opening therein, said combination comprising first and second tracks for attachment to the associated building respectively adjacent to the sides of the door-receiving opening, a sectional door having a plurality of rollers mounted thereon and engageable in said tracks for movement of said door between a closed position and an open position with respect to the opening, counterbalance mechanism for mounting on the associated building adjacent to the door-receiving opening and including a torsion bar operatively con-

nected to said door said counterbalance mechanism serving to counterbalance said door so that said door is biased toward the closed position thereof under the urging of gravity, a door control mechanism for mounting on the associated building adjacent to one of said tracks and including a first latch mechanism operatively connected to said torsion bar and having a door-holding condition for holding said door in the open position thereof against the urging of gravity and having a door-releasing condition, a door-opening device for said door and operative when connected thereto automatically to move said door from the closed position to the open position thereof, second latch mechanism having a device-connecting condition for connecting said door-opening device to said door to effect automatic opening thereof and having a device-holding condition for maintaining said door-opening device out of operative connection with said door, whereby selective operation of said second latch mechanism to the device-connecting condition thereof effects automatic opening of said door and selective operation of said first latch mechanism to the door-releasing condition thereof and said second latch mechanism to the device-holding condition thereof effects automatic closing of said door.

10. The combination for use with an associated building having a door-receiving opening therein, said combination comprising first and second tracks for attachment to the associated building respectively adjacent to the sides of the door-receiving opening, a sectional door having a plurality of rollers mounted thereon and engageable in said tracks for movement of said door between a closed position and an open position with respect to the opening, counterbalance mechanism for mounting on the associated building adjacent to the door-receiving opening and including a torsion bar operatively connected to said door to counterbalance the same so that said door is biased toward the closed position thereof under the urging of gravity, a door control mechanism for mounting on the associated building adjacent to one of said tracks and including a door disc operatively connected to said torsion bar to rotate with said torsion bar in response to movement of said door in said tracks, a first latch mechanism having a door-holding condition for holding said door in the open position thereof, said first latch mechanism in said door-holding condition being in operative contact with said door disc to prevent rotation thereof and thereby to prevent said door from closing, said first latch mechanism having a door-releasing condition when said first latch mechanism is out of operative contact with said door disc thereby to permit free rotation of said door disc, a counterbalance disc for said door and having associated therewith an energy-storing device, said counterbalance disc being operative when connected to said door automatically to move said door from the closed position to the open position thereof, second latch mechanism having a counterbalance-disc-connecting condition for connecting said counterbalance disc and energy-storing device associated therewith to said door to effect automatic opening thereof and having a counterbalance-disc-holding condition for maintaining said counterbalance disc out of operative connection with said door, whereby selective operation of said second latch mechanism to the counterbalance-disc-connecting condition thereof effects automatic opening of said door and selective operation of said first latch mechanism to the door-releasing condition thereof and said second latch mechanism to the counterbalance-disc-holding condition thereof effects automatic closing of said door.

11. The combination set forth in claim 10, wherein said door disc rotates less than one revolution when said door moves between said open position and said closed position thereof.

12. The combination set forth in claim 10, wherein said torsion bar rotates through a plurality of revolutions and said door disc rotates less than one revolution when said door moves between said open position and said closed position thereof.

13. The combination set forth in claim 10, wherein said door disc and said counterbalance disc are mounted for rotation about a common horizontally disposed axis.

14. The combination set forth in claim 10, wherein said door disc and said counterbalance disc are journaled on a common shaft, said door disc being journaled for free rotation about said shaft, said counterbalance disc being fixedly journaled to said shaft for rotation therewith.

15. The combination for use with an associated building having a door-receiving opening therein, first and second tracks for attachment to the associated building respectively adjacent to the sides of the door-receiving opening, a sectional door having a plurality of rollers mounted thereon and engageable in said tracks for movement of said door between a closed position and an open position with respect to the opening, said combination comprising counterbalance mechanism for mounting on the associated building adjacent to the door-receiving opening and including a torsion bar operatively connected to said door to counterbalance the same so that said door is biased toward the closed position thereof under the urging of gravity, a door control mechanism for mounting on the associated building adjacent to one of said tracks and including a door disc operatively connected to said torsion bar to rotate with said torsion bar in response to movement of said door in said tracks, a first latch member fixedly connected to said door disc for rotation therewith, a second latch member pivotable between a door-holding condition for holding said door in the open position thereof and a door-releasing condition, said second latch member being normally biased to said door-holding condition and engageable in said door-holding condition with said first latch member, said second latch member in said door-releasing condition being out of operative contact with said first latch member carried by said door disc thereby to permit free rotation thereof, a counterbalance disc for said door and having associated therewith an energy-storing device, said counterbalance disc being operative when connected to said door automatically to move said door from the closed position to the open position thereof, a third latch member fixedly connected to said counterbalance disc for rotation therewith, a fourth latch member pivotable between a counterbalance-disc-connecting condition for connecting said counterbalance disc to said door to effect automatic opening thereof and a counterbalance-disc-holding condition for maintaining said counterbalance disc out of operative connection with said door, said fourth latch member in said counterbalance-disc-holding condition thereof being in operative contact with said third latch member to prevent rotation of said counterbalance disc and said fourth latch member in the counterbalance-disc-connecting condition thereof being out of operative contact with said third latch member thereby to permit rotation of said counterbalance disc, whereby selective operation of said fourth latch member to the counterbalance-disc-connecting condition thereof effects automatic opening of said door and selective operation of said second latch member to the door disc-releasing condition and fourth latch member to the counterbalance-disc-holding condition thereof effects automatic closing of said door.

16. The combination set forth in claim 15, wherein when said second latch member is in the door-holding condition thereof and said fourth latch member is in the counterbalance-disc-holding condition thereof, the first latch member is angularly spaced about 90° from the third latch member.

17. The combination set forth in claim 15, wherein when said door is in the closed position thereof, said first and said third latch members are angularly spaced apart about 90°.

18. The combination set forth in claim 15, and further including means for preventing engagement of said first and said second latch members subsequent to an automatic opening of said door.

19. The combination set forth in claim 15, and further including a stop lug mounted on said second latch member and a stop lug mounted on said fourth latch member and stop pins mounted on said door disc and said counterbalance disc for

respective engagement therewith thereby to prevent engagement of said first and second latch members subsequent to an automatic opening of said door.

20. The combination set forth in claim 15, wherein said energy-storing device is a spring.

21. The combination for use with an associated building having a door-receiving opening therein, said combination comprising first and second tracks for attachment to the associated building respectively adjacent to the sides of the door-receiving opening, a sectional door having a plurality of rollers mounted thereon and engageable in said tracks for movement of said door between a closed position and an open position with respect to the opening, counterbalance mechanism for mounting on the associated building adjacent to the door-receiving opening to counterbalance said door so that said door is biased toward the closed position thereof under the urging of gravity, a door control mechanism for mounting on the associated building and including a drive connection operatively connected to said door and having a door-closed position and a door-opened position, first latch mechanism operatively associated with said drive connection and having a door-holding condition for holding said drive connection in the door-opened position thereof against the urging of gravity and having a door-releasing condition, a door-opening device for said door control mechanism and operative when connected to said drive connection automatically to move said drive connection from the door-closed position to the door-opened position thereof, second latch mechanism having a device connecting condition for connecting said door-opening device to said drive connection to effect automatic opening of said door and having a device-holding condition for maintaining said door-opening device out of operative connection with said drive connection, and a trigger selectively operable on said first latch mechanism for operating said first latch mechanism between the door-holding condition and the door-releasing condition thereof and selectively operable on said second latch mechanism for operating said second latch mechanism between the device-holding condition and the device-connecting condition thereof, whereby selective operation of said second latch mechanism to the device-connecting condition thereof effects automatic opening of said door and selective operation of said first latch mechanism to the door-releasing condition thereof and said second latch mechanism to the device-holding condition thereof effects automatic closing of said door.

22. The combination for use with an associated building having a door-receiving opening therein, first and second tracks for attachment to the associated building respectively adjacent to the sides of the door-receiving opening, a sectional door having a plurality of rollers mounted thereon and engageable in said tracks for movement of said door between a closed position and an open position with respect to the opening, said combination comprising counterbalance mechanism for mounting on the associated building adjacent to the door-receiving opening and including a torsion bar operatively connected to said door to counterbalance the same so that said door is biased toward the closed position thereof under the urging of gravity, a door control mechanism for mounting on the associated building adjacent to one of said tracks and including a door disc operatively connected to said torsion bar to rotate with said torsion bar in response to movement of said door in said tracks, a first latch member fixedly connected to said door disc for rotation therewith, a second latch member pivotable between a door-holding condition for holding said door in the open position thereof and a door-releasing condition, said second latch member being normally biased to said door-holding condition and engageable in said door-holding condition with said first latch member, said second latch member in said door-releasing condition being out of operative contact with said first latch member carried by said door disc thereby to permit free rotation thereof, a counterbalance disc for said door and having associated therewith an energy-storing device, said counterbalance disc being operative when connected to said door automatically to move said door from the closed position to the open position thereof, a third latch member fixedly connected to said counterbalance disc for rotation therewith, a fourth latch member pivotable between a counterbalance-disc-connecting condition for connecting said counterbalance disc to said door to effect automatic opening thereof and a counterbalance-disc-holding condition for maintaining said counterbalance disc out of operative connection with said door, said fourth latch member in said counterbalance-disc-holding condition thereof being in operative contact with said third latch member to prevent rotation of said counterbalance disc and said fourth latch member in the counterbalance-disc-connecting condition thereof being out of operative contact with said third latch member thereby to permit rotation of said counterbalance disc, a trigger selectively operable on said second latch member for pivoting said second latch member between the door-holding condition and the door-releasing condition thereof and selectively operable on said fourth latch member for pivoting said fourth latch member between said counterbalance-disc-connecting condition and said counterbalance-disc-holding condition, and a plurality of angularly spaced lugs on said door disc for selectively rendering said trigger operable to change the condition of only one of said second and fourth latch members at one time to cause positive operation of the selected one of said latch members by said trigger, whereby selective operation of said fourth latch member to the counterbalance-disc-connecting condition thereof effects automatic opening of said door and selective operation of said second latch member to the door disc-releasing condition and fourth latch member to the counterbalance-disc-holding condition thereof effects automatic closing of said door.

23. The combination set forth in claim 22, wherein said trigger is positioned between said second and said fourth latch members.

24. The combination set forth in claim 22, wherein said trigger includes a cam follower positioned adjacent to said door disc to be contacted by said lugs mounted on said door disc to position said trigger relative to said second and said fourth latch members for selective operation of said second and fourth latch members by said trigger.

25. The combination set forth in claim 22, wherein said plurality of angularly spaced lugs consist of two lugs angularly spaced apart about 90° on said door disc.

26. The combination set forth in claim 22, wherein said second and said fourth latch members each have an opening therein respectively to receive a portion of said trigger.

27. The combination set forth in claim 22, wherein said trigger has extending therefrom two outwardly disposed cams, said cams extending at an angle of 180° from each other, said trigger being positioned between said second and said fourth latch members, said second and said fourth latch members each having therein an opening respectively to receive a cam of said trigger.

28. The combination for use with an associated building having a door-receiving opening therein, first and second tracks for attachment to the associated building respectively adjacent to the sides of the door-receiving opening, a sectional door having a plurality of rollers mounted thereon and engageable in said tracks for movement of said door between a closed position and an open position with respect to the opening, said combination comprising counterbalance mechanism for mounting on the associated building adjacent to the door-receiving opening and including a torsion bar operatively connected to said door to counterbalance the same so that said door is biased toward the closed position thereof under the urging of gravity, a door control mechanism for mounting on the associated building adjacent to one of said tracks and including a door disc operatively connected to said torsion bar to rotate with said torsion bar in response to movement of said door in said tracks, a first latch member fixedly connected to said door disc for rotation therewith, a second latch member pivotable between a door-holding condition for holding said

door in the open position thereof and a door-releasing condition, said second latch member being normally biased to said door-holding condition and engageable in said door-holding condition with said first latch member, said second latch member in said door-releasing condition being out of operative contact with said first latch member carried by said door disc thereby to permit free rotation thereof, a counterbalance disc for said door and having associated therewith an energy-storing device, said counterbalance disc being operative when connected to said door automatically to move said door from the closed position to the open position thereof, a third latch member fixedly connected to said counterbalance disc for rotation therewith, a fourth latch member pivotable between a counterbalance-disc-connecting condition for connecting said counterbalance disc to said door to effect automatic opening thereof and a counterbalance-disc-holding condition for maintaining said counterbalance disc out of operative connection with said door, said fourth latch member in said counterbalance-disc-holding condition thereof being in operative contact with said third latch member to prevent rotation of said counterbalance disc and said fourth latch member in the counterbalance-disc-connecting condition thereof being out of operative contact with said third latch member thereby to permit rotation of said counterbalance disc, a trigger selectively operable on said second latch member for pivoting said second latch member between the door-holding condition and the door-releasing condition thereof and selectively operable on said fourth latch member for pivoting said fourth latch member between said counterbalance-disc-connecting condition and said counterbalance-disc-holding condition, a plurality of angularly spaced lugs on said door disc for selectively rendering said trigger operable to change the condition of only one of said second and fourth latch member at one time to cause positive operation of the selected one of said latch members by said trigger, and a control element disposed adjacent to the associated building and operatively connected to said trigger to activate said trigger in response to operation of said control element upon the entering of or the exiting from the associated building by a wheeled vehicle, whereby selective operation of said fourth latch member to the counterbalance-disc-connecting condition thereof effects automatic opening of said door and selective operation of said second latch member to the door disc-releasing condition and fourth latch member to the counterbalance-disc-holding condition thereof effects automatic closing of said door.

29. The combination set forth in claim 28, wherein said control element moves said trigger downwardly in response to operation of said control element.

30. The combination set forth in claim 28, wherein said control element is hydraulically operated thereby to activate said trigger in response to movement of hydraulic fluid in said control element.

31. The combination set forth in claim 28, wherein said control element is disposed in front of the associated building and across the door-receiving opening therein.

32. The combination for use with an associated building having a door-receiving opening therein, said combination comprising first and second tracks for attachment to the associated building respectively adjacent to the sides of the door-receiving opening, a sectional door having a plurality of rollers mounted thereon and engageable in said tracks for movement of said door between a closed position and an open position with respect to the opening, counterbalance mechanism for mounting on the associated building adjacent to the door-receiving opening to counterbalance said door so that said door is biased toward one of said positions, and door control mechanism for mounting on the associated building and including a controlling element therefor disposed in front of the door-receiving opening, said door-control mechanism being operatively connected to said door, said door control mechanism including means selectively operable between a door-holding condition for holding the door against the biased position thereof and a door-releasing condition permitting movement of said door to the biased position thereof for accomplishing selective automatic movement thereof between said closed and open positions of said door, said door control mechanism in the closed position of said door accommodating both manual opening of said door and automatic opening of said door by actuation of said control element, said door control mechanism in the open position of said door accommodating both manual closing of said door and automatic closing of said door by actuation of said control element after manual opening of said door.

33. The combination set forth in claim 32, wherein said door is biased toward the closed position thereof.

34. The combination for use with an associated building having a door-receiving opening therein, said combination comprising first and second tracks for attachment to the associated building respectively adjacent to the sides of the door-receiving opening, a sectional door having a plurality of rollers mounted thereon and engageable in said tracks for movement of said door between a closed position and an open position with respect to the opening, counterbalance mechanism for mounting on the associated building adjacent to the door-receiving opening and operatively connected to said door to counterbalance the same, said counterbalance mechanism including a torsion bar and a wheel having a plurality of teeth mounted on the periphery thereof journaled thereon for free rotation with respect thereto, a torsion spring surrounding said torsion bar and fixed at one end thereof to the associated building and fixed at the other end thereof to said wheel, drive means mounted to said torsion bar for rotation therewith and adjustment with respect thereto and operatively connected to said wheel, adjustment of said drive means with respect to said torsion bar rotating said wheel with respect to said torsion bar to adjust the tension in said torsion spring.

35. The combination set forth in claim 34, wherein said drive means includes a worm gear.

36. A door control mechanism for use with a door mounted in an associated building door-receiving opening to accommodate a manual movement of the door from a first position to a second position thereof followed by an automatic movement of the door from the second position to the first position thereof under the urging of a biasing means and then by an automatic movement of the door from the first position to the second position thereof and then by a manual movement of the door from the second position thereof to the first position thereof, said door control mechanism comprising a drive connection operatively connected to said door, a carrier for movement with respect to the opening and having thereon for movement therewith a first latch member and a drive element, a door-driving device operatively connected to said drive element and having an energy-storing condition and a door-driving condition, a second latch member mounted adjacent to said carrier for engagement with said first latch member, engagement of said first and second latch members holding said door-driving device in the energy-storing condition thereof and disengagement of said first and second latch members placing said door-driving device in the door-driving condition thereof, a third latch member mounted on said drive connection and movable therewith and a fourth latch member mounted adjacent to said carrier for selective engagement with said third latch member, engagement of said third and fourth latch members holding said door in the second position thereof and disengagement of said third and fourth latch members releasing said door for movement to the first position thereof, whereby disengagement of said first and second latch members effecting automatic movement of the door to said second position and engagement of said first and second latch members together with disengagement of said third and fourth latch members effecting automatic movement of the door to the first position thereof and engagement of said third and fourth latch members holding the door in the second position thereof.

37. The door control mechanism set forth in claim 36, wherein the first position of the door is a closed position thereof and the second position of the door is an open position thereof.

38. A door control mechanism for use with a door mounted in an associated building door-receiving opening to accommodate a manual movement of the door from a first position to a second position thereof followed by an automatic movement of the door from the second position the the first position thereof under the urging of a biasing means and then by an automatic movement of the door from the first position to the second position thereof and then by a manual movement of the door from the second position thereof to the first position thereof, said door control mechanism comprising a first latch mechanism operatively connected to the biasing means and having a door-holding condition for holding the door in the second position thereof, and having a door-releasing condition, a door-driving device for the door and operative when connected thereto automatically to move the door from the first position to the second position thereof, second latch mechanism having a device-connecting condition for connecting said door-driving device to the door to effect automatic movement thereof to the second position and having a device-holding condition for maintaining said door-driving device out of operative connection with the door, whereby selective operation of said second latch mechanism to the device-connecting condition thereof effects automatic movement of the door to the second position thereof and selective operation of said first latch mechanism to the door-releasing condition thereof and said second latch mechanism to the device-holding condition thereof effects automatic movement of the door to the first position thereof.

39. A door control mechanism for use with a door mounted in an associated building door-receiving opening to accommodate a manual movement of the door from a first position to a second position thereof followed by an automatic movement of the door from the second position to the first position thereof under the urging of a biasing means and then by an automatic movement of the door from the first position to the second position thereof and then by a manual movement of the door from the second position thereof to the first position thereof, said door control mechanism comprising a door disc operatively connected to the biasing means to rotate with the biasing means in response to movement of the door, a first latch mechanism having a door-holding condition for holding the door in the second position thereof, said first latch mechanism in said door-holding condition being in operative contact with said door disc to prevent rotation thereof and thereby to prevent the door from moving to the first position thereof, said first latch mechanism having a door-releasing condition when said first latch mechanism is out of operative contact with said door disc thereby to permit free rotation of said door disc, a counterbalance disc for the door and having associated therewith an energy-storing device, said counterbalance disc being operative when connected to the door automatically to move the door from the first position to the second position thereof, second latch mechanism having a counterbalance-disc-connecting condition for connecting said counterbalance disc and said energy-storing device associated therewith to the door to effect automatic movement thereof from the first position to the second position thereof and having a counterbalance-disc-holding condition for maintaining said counterbalance disc out of operative connection with the door, whereby selective operation of said second latch mechanism to the counterbalance-disc-connecting condition thereof effects automatic movement of the door from the first position to the second position thereof and selective operation of said first latch mechanism to the door-releasing condition thereof and said second latch mechanism to the counterbalance-disc-holding condition thereof effects automatic movement of the door from the second position to the first position thereof.

40. A door control mechanism for use with a door mounted in an associated building door-receiving opening to accommodate a manual movement of the door from a first position to a second position thereof followed by an automatic movement of the door from the second position to the first position thereof under the urging of a biasing means and then by an automatic movement of the door from the first position to the second position thereof and then by a manual movement of the door from the second position thereof to the first position thereof, said door control mechanism comprising a door disc operatively connected to the biasing means to rotate therewith in response to movement of the door, a first latch member fixedly connected to said door disc for rotation therewith, a second latch member pivotable between a door-holding condition for holding the door in the second position thereof and a door-releasing condition, said second latch member being normally biased to said door-holding condition and engageable in said door-holding condition with said first latch member, said second latch member in said door-releasing condition being out of operative contact with said first latch member carried by said door disc thereby to permit free rotation thereof, a counterbalance disc for the door and having associated therewith an energy-storing device, said counterbalance disc being operative when connected to the door automatically to move the door from the first position to the second position thereof, a third latch member fixedly connected to said counterbalance disc for rotation therewith, a fourth latch member pivotable between a counterbalance-disc-connecting condition for connecting said counterbalance disc to the door to effect automatic movement thereof from the first to the second position thereof and a counterbalance-disc-holding condition for maintaining said counterbalance disc out of operative connection with the door, said fourth latch member in said counterbalance-disc-holding condition thereof being in operative contact with said third latch member to prevent rotation of said counterbalance disc and said fourth latch member in the counterbalance-disc-connecting condition thereof being out of operative contact with said third latch member thereby to permit rotation of said counterbalance disc, whereby selective operation of said fourth latch member to the counterbalance-disc-connecting condition thereof effects automatic movement of the door from the first to the second position thereof and selective operation of said second latch member to the door disc-releasing condition and fourth latch member to the counterbalance-disc-holding condition thereof effects automatic movement of the door from the second position to the first position thereof.

41. A door control mechanism for use with a door mounted in an associated building door-receiving opening to accommodate a manual movement of the door from a first position to a second position thereof followed by an automatic movement of the door from the second position to the first position thereof under the urging of a biasing means and then by an automatic movement of the door from the first position to the second position thereof and then by a manual movement of the door from the second position thereof to the first position thereof, said door control mechanism comprising a drive connection operatively connected to the door and having a first position and a second position, first latch mechanism operatively associated with said drive connection and having a door-holding condition for holding said drive connection in the second position thereof and having a door-releasing condition, a door-driving device for said door control mechanism and operative when connected to said drive connection automatically to move said drive connection from the first position to the second position thereof, second latch mechanism having a device-connecting condition for connecting said door-driving device to said drive connection to effect automatic movement of the door from the first position to the second position thereof and having a device-holding condition for maintaining said door-driving device out of operative connection with said drive connection, and a trigger selectively operable on said first latch mechanism for operating said first latch mechanism

between the door-holding condition and the door-releasing condition thereof and selectively operable on said second latch mechanism for operating said second latch mechanism between the device-holding condition and the device-connecting condition thereof, whereby selective operation of said second latch mechanism to the device-connecting condition thereof effects automatic movement of the door from the first position to the second position thereof and selective operation of said first latch mechanism to the door-releasing condition thereof and said second latch mechanism to the device-holding condition thereof effects automatic movement of the door from the second position to the first position thereof.

42. A door control mechanism for use with a door mounted in an associated building door-receiving opening to accommodate a manual movement of the door from a first position to a second position thereof followed by an automatic movement of the door from the second position to the first position thereof under the urging of a biasing means and then by an automatic movement of the door from the first position to the second position thereof and then by a manual movement of the door from the second position thereof to the first position thereof, said door control mechanism comprising a door disc operatively connected to the biasing means to rotate therewith in response to movement of the door, a first latch member fixedly connected to said door disc for rotation therewith, a second latch member pivotable between a door-holding condition for holding the door in the second position thereof and a door-releasing condition, said second latch member being normally biased to said door-holding condition and engageable in said door-holding condition with said first latch member, second latch member in said door-releasing condition being out of operative contact with said first latch member carried by said door disc thereby to permit free rotation thereof, a counterbalance disc for the door and having associated therewith an energy-storing device, said counterbalance disc being operative when connected to the door automatically to move the door from the first position to the second position thereof, a third latch member fixedly connected to said counterbalance disc for rotation therewith, a fourth latch member pivotable between a counterbalance-disc-connecting condition for connecting said counterbalance disc to the door to effect automatic movement thereof from the first position to the second position thereof and a counterbalance-disc-holding condition for maintaining said counterbalance disc out of operative connection with the door, said fourth latch member in said counterbalance-disc-holding condition thereof being in operative contact with said third latch member to prevent rotation of said counterbalance disc and said fourth latch member in the counterbalance-disc-connecting condition thereof being out of operative contact with said third latch member thereby to permit rotation of said counterbalance disc, a trigger selectively operable on said second latch member for pivoting said second latch member between the door-holding condition and the door-releasing condition thereof and selectively operable on said fourth latch member for pivoting said fourth latch member between said counterbalance-disc-connecting condition and said counterbalance-disc-holding condition, and a plurality of angularly spaced lugs on said door disc for selectively rendering said trigger operable to change the condition of only one of said second and fourth latch members at one time to cause positive operation of the selective one of said latch members by said trigger, whereby selective operation of said fourth latch member to the counterbalance-disc-connecting condition thereof effects automatic movement of the door from the first position to the second position thereof and selective operation of said second latch member to the door disc-releasing condition and fourth latch member to the counterbalance-disc-holding condition thereof effects automatic movement of the door from the second position to the first position thereof.

43. A door control mechanism for use with a door mounted in an associated building door-receiving opening to accommodate a manual movement of the door from a first position to a second position thereof followed by an automatic movement of the door from the second position to the first position thereof under the urging of a biasing means and then by an automatic movement of the door from the first position to the second position thereof and then by a manual movement of the door from the second position thereof to the first position thereof, said door control mechanism comprising a door disc operatively connected to the biasing means to rotate therewith in response to movement of the door, a first latch member fixedly connected to said door disc for rotation therewith, a second latch member pivotable between a door-holding condition for holding the door in the second position thereof and a door-releasing condition, said second latch member being normally biased to said door-holding condition and engageable in said door-holding condition with said first latch member, second latch member in said door-releasing condition being out of operative contact with said first latch member carried by said door disc thereby to permit free rotation thereof, a counter-balance disc for the door and having associated therewith an energy-storing device, said counterbalance disc being operative when connected to the door automatically to move the door from the first position to the second position thereof, a third latch member fixedly connected to said counterbalance disc for rotation therewith, a fourth latch member pivotable between a counterbalance-disc-connecting condition for connecting said counterbalance disc to the door to effect automatic movement thereof from the first position to the second position thereof and a counterbalance-disc-holding condition for maintaining said counterbalance disc out of operative connection with the door, said fourth latch member in said counterbalance-disc-holding condition thereof being in operative contact with said third latch member to prevent rotation of said counterbalance disc and said fourth latch member in the counterbalance-disc-connecting condition thereof being out of operative contact with said third latch member thereby to permit rotation of said counterbalance disc, a trigger selectively operable on said second latch member for pivoting said second latch member between the door-holding condition and the door-releasing condition thereof and selectively operable on said fourth latch member for pivoting said fourth latch member between said counterbalance-disc-connecting condition and said counterbalance-disc-holding condition, and a plurality of angularly spaced lugs on said door disc for selectively rendering said trigger operable to change the condition of only one of said second and fourth latch members at one time to cause positive operation of the selective one of said latch members by said trigger, and a control element disposed adjacent to the associated building and operatively connected to said trigger to activate said trigger in response to operation of said control element upon the entering of or the exiting from the associated building by a wheeled vehicle, whereby selective operation of said fourth latch member to the counterbalance-disc-connecting condition thereof effects automatic movement of the door from the first position to the second position thereof and selective operation of said second latch member to the door disc-releasing condition and fourth latch member to the counterbalance-disc-holding condition thereof effects automatic movement of the door from the second position to the first position thereof.

* * * * *