US00D466142S

(12) United States Design Patent

Lin et al.

(10) Patent No.: US D466,142 S
(45) Date of Patent: ** Nov. 26, 2002

(54) **DIGITAL CAMERA**

(75) Inventors: **Yi-Jen Lin**, TaiChung (TW); **Hao-Sheng Lo**, Taipei (TW)

(73) Assignee: **Aiptek International Inc.** (TW)

(**) Term: **14 Years**

(21) Appl. No.: **29/156,352**

(22) Filed: **Mar. 1, 2002**

(51) **LOC (7) Cl.** **16-01**
(52) **U.S. Cl.** **D16/202**; D16/218
(58) **Field of Search** D16/200–206, D16/208, 209, 218; 348/373–376; 396/6, 535, 536–541

(56) **References Cited**

U.S. PATENT DOCUMENTS

D187,503 S * 3/1960 Akahane D16/205
D445,441 S * 7/2001 Liu D16/202
D448,785 S * 10/2001 Chou D16/202
D456,830 S * 5/2002 Chen D16/202
D458,290 S * 6/2002 Tu et al. D16/202

OTHER PUBLICATIONS

Global sources website globalsources.com Jan. 2, 2001 SG–DC2616 300K Pixels Digital still camera.*

* cited by examiner

Primary Examiner—Adir Aronovich
(74) *Attorney, Agent, or Firm*—Troxell Law Office PLLC

(57) **CLAIM**

The ornamental design for a digital camera, as shown and described.

DESCRIPTION

FIG. **1** is a perspective view of a digital camera showing my design;
FIG. **2** is a front elevational view thereof;
FIG. **3** is a rear elevational view thereof;
FIG. **4** is a bottom plan view thereof;
FIG. **5** is a top plan view thereof;
FIG. **6** is a left side elevational view thereof; and,
FIG. **7** is a right side elevational view thereof.

1 Claim, 4 Drawing Sheets

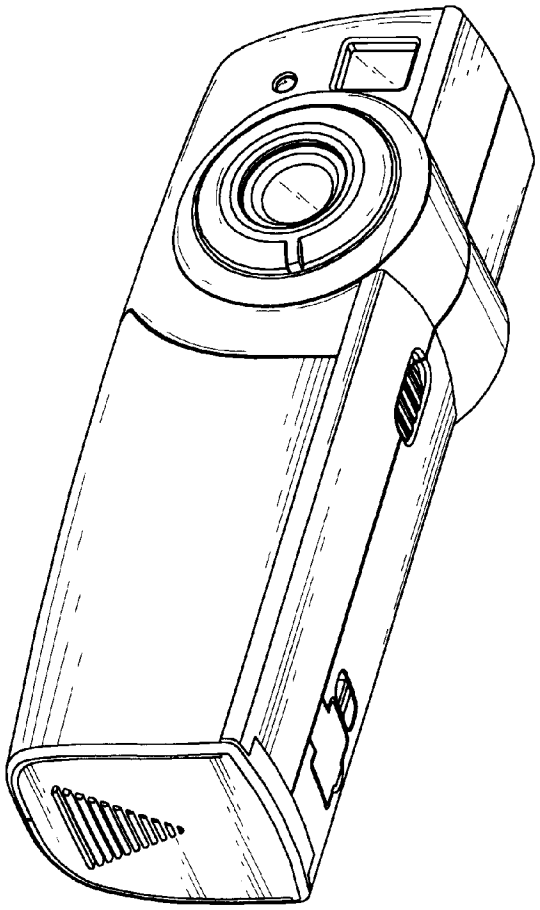

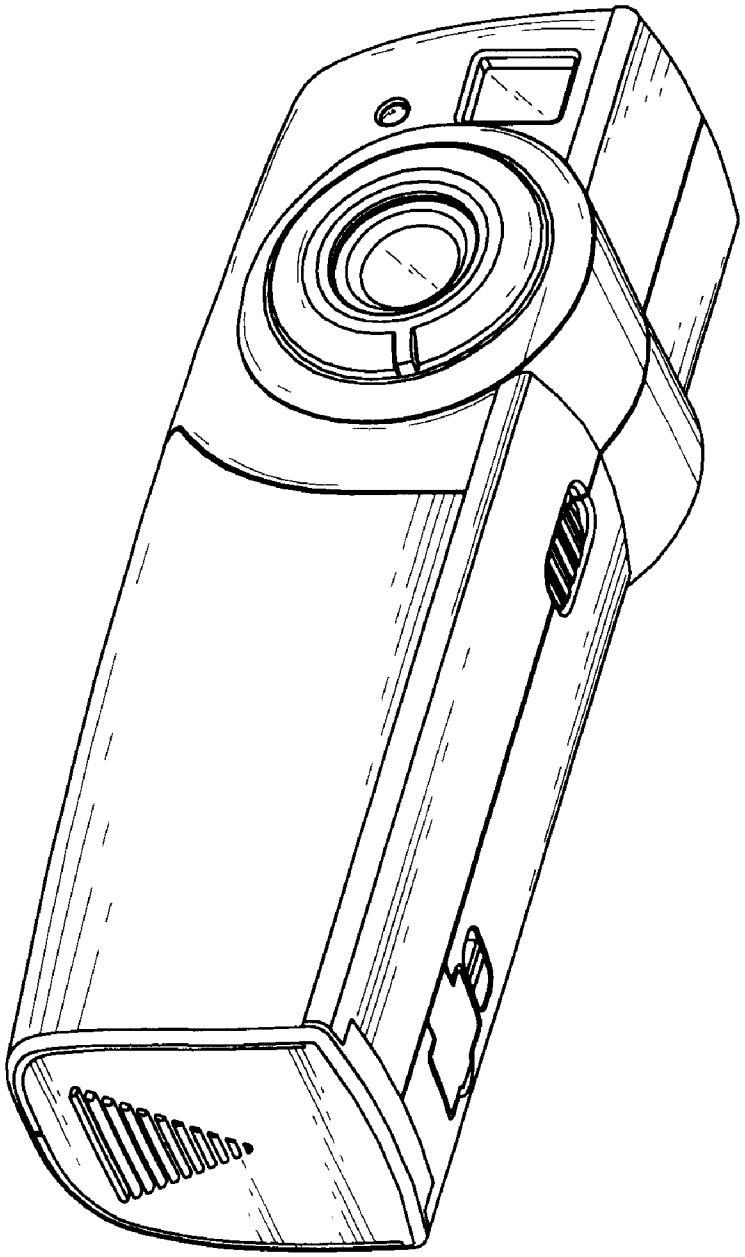

FIG. 1

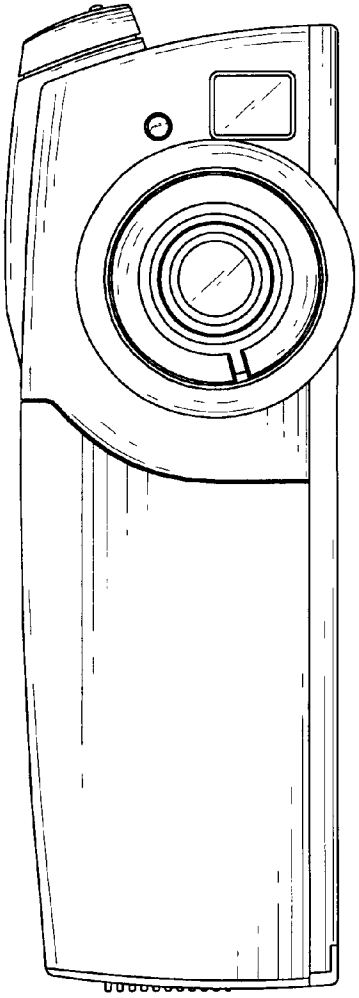

FIG. 2

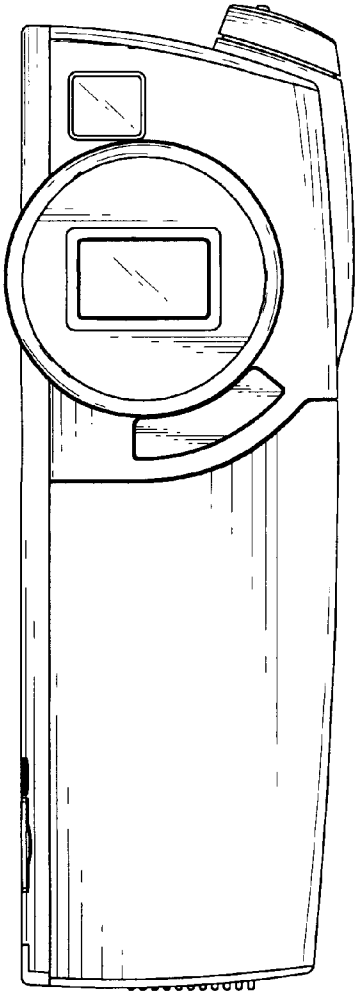

FIG. 3

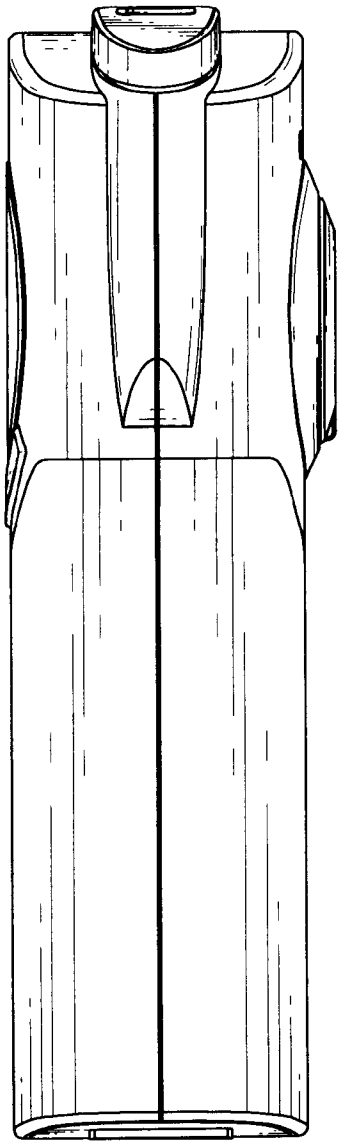

FIG. 4

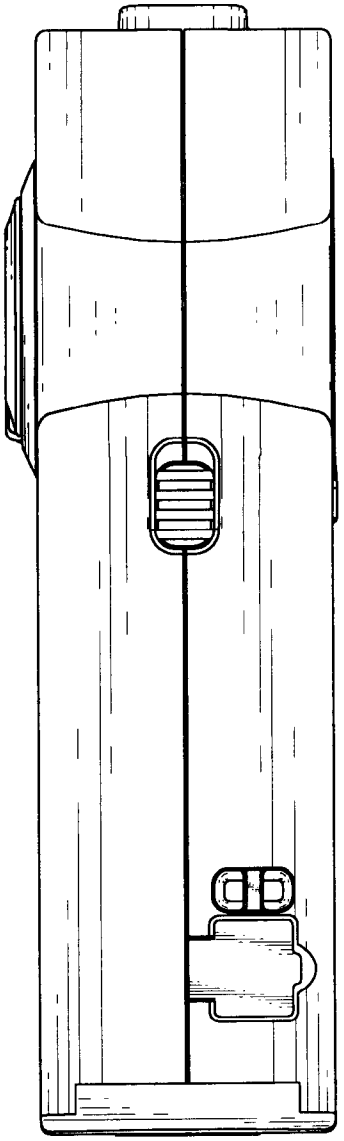

FIG. 5

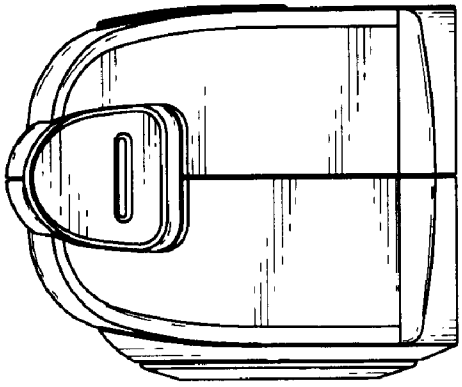

FIG. 6

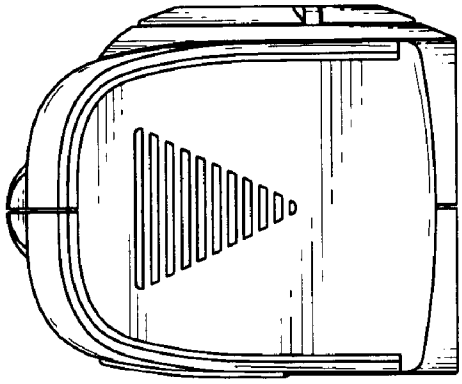

FIG. 7