Sept. 8, 1931. L. J. MOST 1,822,166

FOUNTAIN PEN CAP

Filed Feb. 15, 1930

Fig. 1.

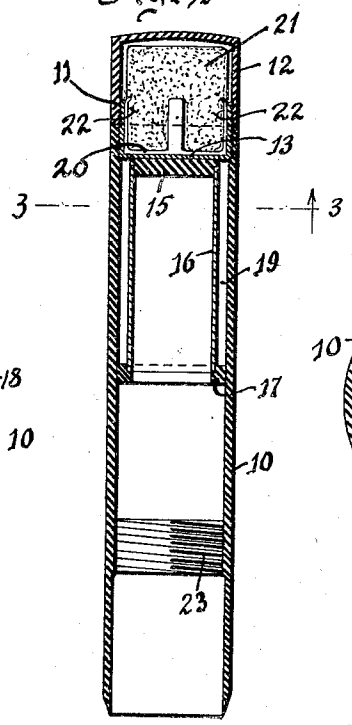

Fig. 2.

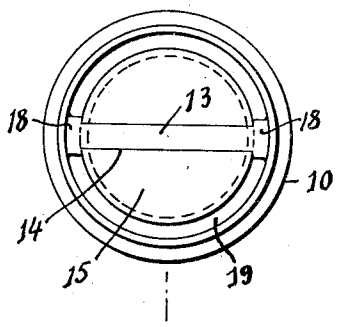

Fig. 3.

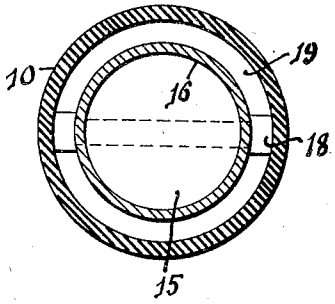

Fig. 4.

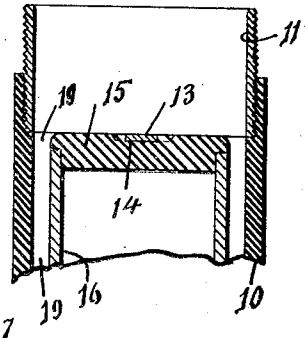

Fig. 5.

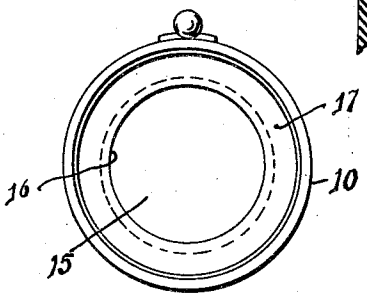

Inventor
L. J. Most
By his Attorney
B. Joffe

Patented Sept. 8, 1931

1,822,166

UNITED STATES PATENT OFFICE

LUCIFER J. MOST, OF NEW YORK, N. Y., ASSIGNOR TO MABIE TODD & CO., OF NEW YORK COUNTY, NEW YORK

FOUNTAIN PEN CAP

Application filed February 15, 1930. Serial No. 428,590.

My invention relates to fountain pen caps to be used with a combination mechanical pencil and fountain pen, and the object of the invention is to provide a pen cap which will carry the lead magazine as well as the eraser for the mechanical pencil, thereby permitting the use of a unitary barrel accommodating both the pen and pencil mechanisms.

In the appended drawings forming part of this application, Figure 1 is a vertical section through a cap embodying my invention.

Figure 2 is an enlarged top plan of the cap with the tip cap removed.

Figure 3 is a cross-section on a line 3/3, Figure 1.

Figure 4 is a fragmentary vertical section on line 4/4, Figure 2, and

Figure 5 is a top plan on the open end of the cap.

Referring to the drawings, 10 is a tube, one end of which has a threaded recess, as best shown in Figure 4, which is engaged by a nipple 11. A portion of the nipple projects above the tube 10 to receive a tip cap 12 which will close the tube at the end, and therewith form the upper end of the pen cap.

The edge of the nipple 11 in the threaded recess of the tube 10 is provided with a bridge 13, see Figure 2. This bridge fits into a slot 14 of a plug 15 fitted into one end of a sleeve 16. The other end of the sleeve is supported in the tube 10 by a ring 17 frictionally engaged in the tube 10. The inner diameter of the ring and of the sleeve are the same and the outer diameter of the sleeve and the plug are also the same.

To prevent the plug 15 and sleeve 16 from moving on the bridge along the slot, the portions of the bridge 18 outside the plug are larger, as best seen at 18 in Figure 2. The engagement of the plug with the bridge of the nipple locates the sleeve within the tube both longitudinally and lateraly. In other words, the bridge 13, plug 15 and the ring 17 retain the sleeve 16 concentric with the tube 10. The engagement of the plug with the bridge of the nipple prevents longitudinal displacement of the tube when pressure is exerted on the ring 17 and therefore the tube 16 when the cap is screwed on the barrel of a pen, not shown in the drawing.

The annular space 19 formed between the sleeve 16 and the tube 10 is closed permanently at the lower end by the ring 17, but open at the other end through the nipple 11, as the larger parts 18 of the bridge 13 obstruct only a fractional part of the annular space, as best seen in Figure 2.

This annular space 19 serves as a magazine for leads wherein the leads are retained by an eraser holder 20 fitted into the nipple 11, see Figure 1, the eraser being retained in the holder by the prongs 22. To place or remove leads, it is only necessary to extract the eraser with the holder from the nipple 11.

The sleeve 16 with its plug 15 forms an inner cap which accommodates the nib of the fountain pen when a barrel not shown is engaged by the thread 23 provided in the tube 10 at a proper distance from the ring 17. Said tube with its tip cap forms the outer cap or the fountain pen cap.

The engagement of the bridge 13 with the plug 15, in addition to forming a stop for the inner cap within the outer cap, also serves as a lock for the nipple in the tube 10, which is the outer cap. The bridge 13 prevents the turning of the nipple once it has been engaged by the plug.

I claim

1. A fountain pen cap comprising a tube, a nipple at one end thereof, a tip cap engaging the nipple for closing the tube above the nipple, a pen nib cap within the tube, said nipple having means for engaging the closed end of the nib cap, and means at the open end of the nib cap engaging the tube, said nib cap and tube forming an annular space accessible only through the nipple.

2. A fountain pen cap comprising a tube having a removable tip at the closed end, a pen nib cap located within the tube to form an annular space between said nib cap and tube, a ring at the open end of the nib cap engaging the tube and nib cap and closing the annular space, and means in said tube at the tip for engaging the closed end of the nib cap to properly space the nib cap from the tube at the closed end, said means only partially

obstructing access to said annular space between the nib cap and the tube.

3. A fountain pen comprising a tube, a nipple at one end of said tube, a tip cap for said nipple, a pen nib cap in said tube forming therewith an annular space, a ring at the open end of the nib cap engaging the tube and closing the annular space between the nib cap and the tube, and a bridge extending between the edges of the nipple within the tube, the top of said nib cap having a slot engaging the bridge, said bridge having means for engaging the nib cap to properly space the same within the tube.

4. A fountain pen cap comprising a tube, a nipple in one end of the tube, a tip cap engaging the nipple and closing the tube, a sleeve within the tube, a plug closing said sleeve, means carried by the nipple and engaging the plug to maintain the sleeve at the plug properly spaced from the tube, and a ring at the other end of the sleeve engaging the tube to maintain the engagement of the plug with the means of the nipple.

5. A fountain pen cap comprising a tube, a nipple in one end thereof, a tip cap removably connected to the nipple, a sleeve within the tube, a plug in said sleeve, a bridge across the edges of the nipple within the tube, said plug having a slot engaging the bridge, the portion of the bridge outside of the plug being larger to maintain the sleeve properly spaced within the tube, and a ring at the open end of the sleeve engaging the tube and whereby the sleeve with the plug is maintained in engagement with the bridge of the nipple, said ring closing the space formed between the sleeve and the tube.

6. A fountain pen cap comprising a tube, a nipple at one end thereof, a tip engaging the nipple for closing the tube at the nipple end, a nib cap within the tube, means at the open end of the nib cap engaging the tube to form therewith an annular clearance closed at the said means, means carried by the nipple engaging the nib cap to properly locate it within the tube on said end, said nipple means only partially obstructing access to the annular space formed by the nib cap and tube.

LUCIFER J. MOST.