United States Patent [19]

Green

[11] **Patent Number: Des. 284,098**

[45] **Date of Patent: ** Jun. 3, 1986**

[54] **LINEAR SURGICAL STAPLER**

[75] Inventor: **David T. Green**, Norwalk, Conn.

[73] Assignee: **United States Surgical Corporation**, Norwalk, Conn.

[**] Term: **14 Years**

[21] Appl. No.: **704,288**

[22] Filed: **Feb. 22, 1985**

[52] **U.S. Cl.** **D24/26**

[58] **Field of Search** ..... D24/26, 27, 28; D8/48, D8/49, 50, 51, 68; 128/305, 325, 326, 334 R, 335, 753, 754; 227/DIG. 1, 19, 156, 129, 134, 120, 110, 127, 109; 206/339

[56] **References Cited**

U.S. PATENT DOCUMENTS

D. 272,270	1/1984	Green et al.	D24/26
D. 272,271	1/1984	Green et al.	D24/26
D. 272,272	1/1984	Green et al.	D24/26
D. 272,273	1/1984	Green et al.	D24/26
D. 272,274	1/1984	Green et al.	D24/26
D. 272,275	1/1984	Green et al.	D24/26
D. 272,276	1/1984	Green et al.	D24/26
D. 272,277	1/1984	Green et al.	D24/26
D. 272,278	1/1984	Green et al.	D24/26
D. 273,513	4/1984	Spreckelmeier	D24/26
3,080,564	3/1963	Strekopitov et al.	1/50
3,252,643	5/1966	Strekopytov et al.	227/109
3,269,630	8/1966	Fleischer	227/107
3,275,211	9/1966	Hirsch et al.	227/124
3,315,863	4/1967	O'Dea	227/19
3,494,533	2/1970	Green et al.	227/19
3,589,589	6/1971	Akopov	227/153
4,296,881	10/1981	Lee	227/30
4,354,628	10/1982	Green	227/19
4,378,901	4/1983	Akopov et al.	227/19
4,383,634	5/1983	Green	227/19
4,402,444	9/1983	Green	227/19
4,442,964	4/1984	Becht	227/8
4,470,533	9/1984	Schuler	227/19
4,506,670	3/1985	Crossley	128/334 R
4,506,671	3/1985	Green	128/334 R

FOREIGN PATENT DOCUMENTS

D. 82240	1/1983	Australia .	
D. 82280	1/1983	Australia .	
D. 82307	1/1983	Australia .	
D. 82308	1/1983	Australia .	
918023	1/1973	Canada	128/122
1034826	7/1978	Canada	128/122
1038718	9/1978	Canada	128/122
1835500	4/1961	Fed. Rep. of Germany .	
1237035	6/1960	France .	
906791	9/1962	United Kingdom .	
913218	12/1962	United Kingdom .	
1158504	7/1969	United Kingdom .	

Primary Examiner—A. Hugo Word
Assistant Examiner—Stella M. Reid
Attorney, Agent, or Firm—John E. Nathan; Robert R. Jackson; Richard A. Inz

[57] **CLAIM**

The ornamental design for a linear surgical stapler, substantially as shown and described.

DESCRIPTION

FIG. **1** is a perspective view of a linear surgical stapler showing my new design;
FIG. **2** is a side elevational view thereof;
FIG. **3** is a top plan view thereof;
FIG. **4** is a bottom plan view thereof;
FIG. **5** is an end elevational view thereof, as seen from the right of FIG. **2**; and
FIG. **6** is an end elevational view thereof, as seen from the left of FIG. **2**.

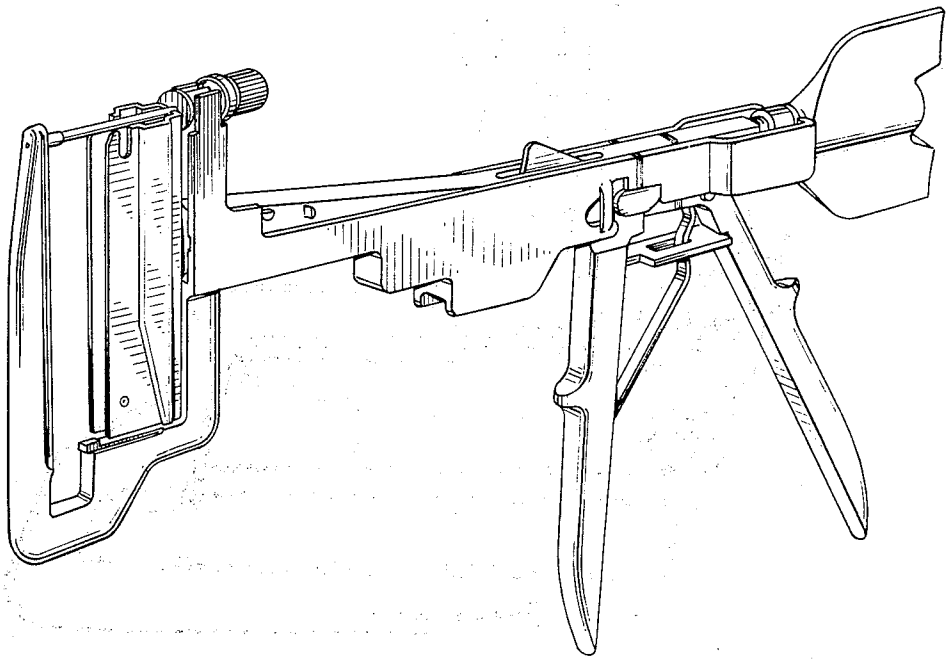

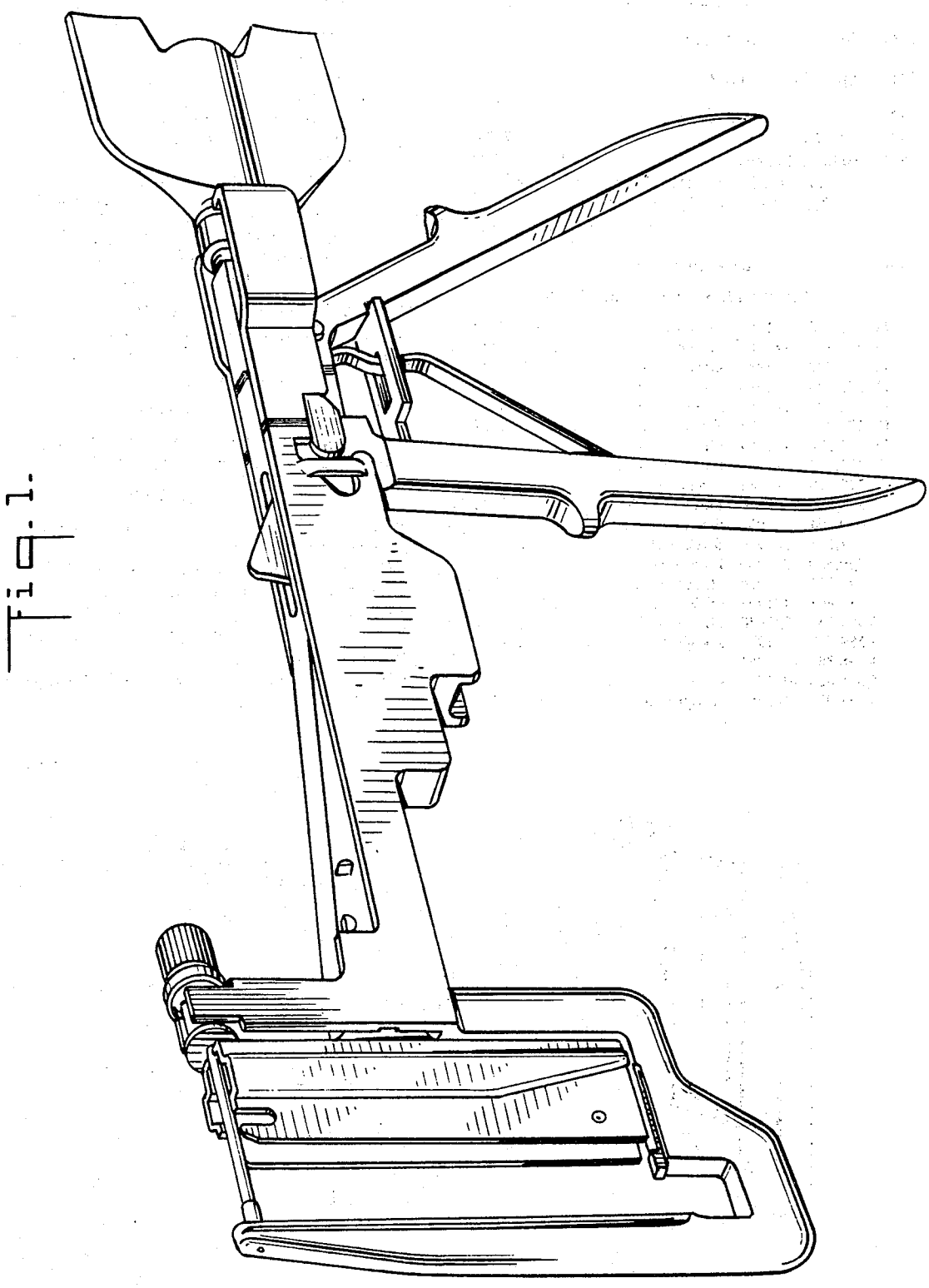

Fig. 1.

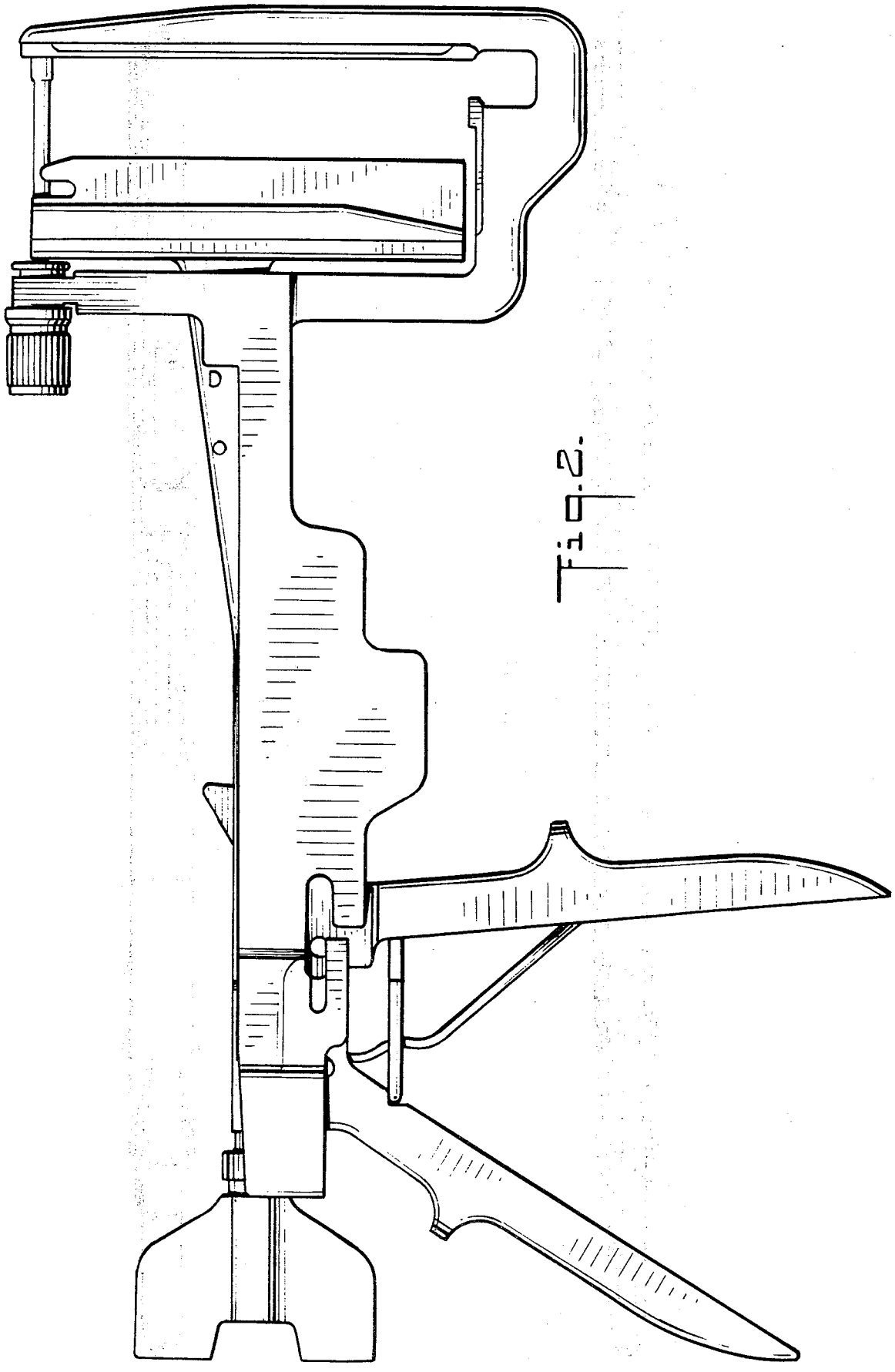

Fig. 2.

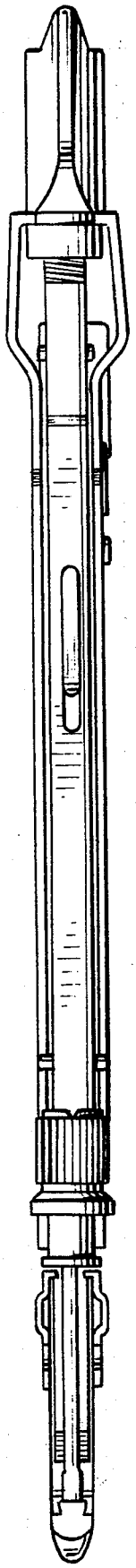

Fig. 3.

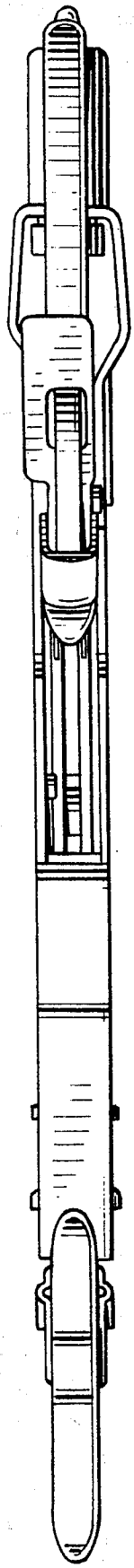

Fig. 4.

Fig. 5.

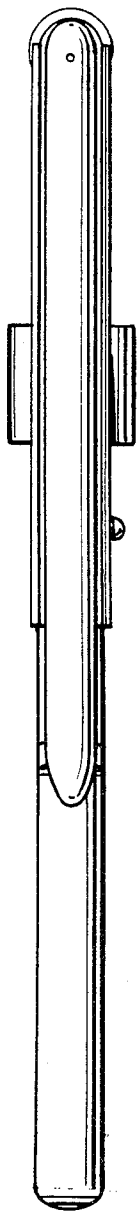

Fig. 6.

