C. SUDRE.

APPARATUS FOR SPLITTING SLATE BLOCKS AND THE LIKE.

APPLICATION FILED APR. 17, 1912.

1,094,177. Patented Apr. 21, 1914.

2 SHEETS—SHEET 1.

Fig.1

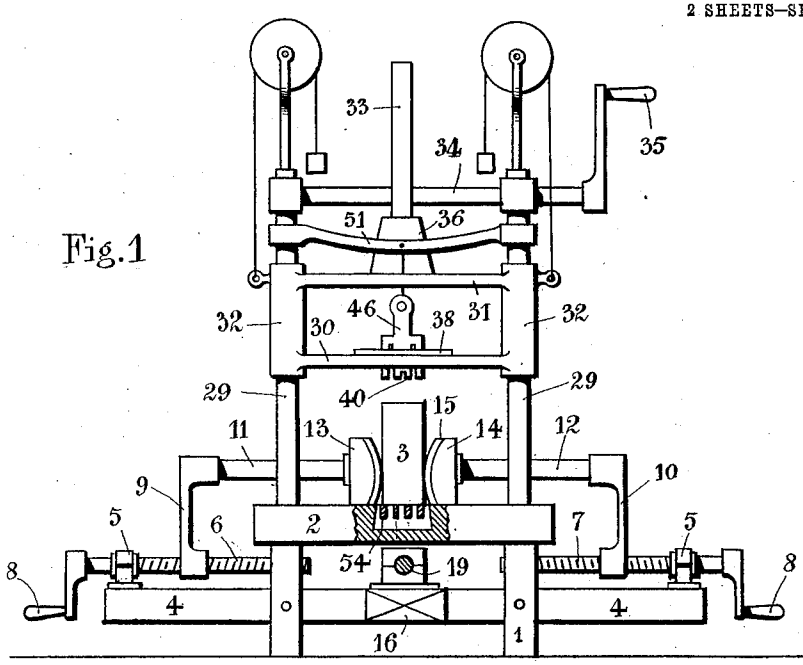

Fig.2

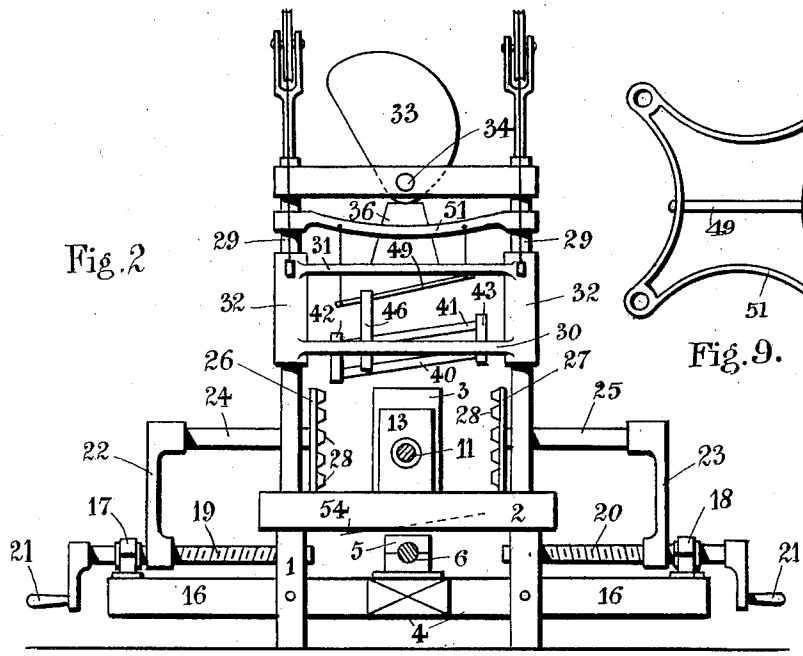

Fig.9.

Witnesses:
Charles Blondel
Victor Marendowski

Inventor:
Charles Sudre

COLUMBIA PLANOGRAPH CO., WASHINGTON, D. C

C. SUDRE.

APPARATUS FOR SPLITTING SLATE BLOCKS AND THE LIKE.

APPLICATION FILED APR. 17, 1912.

1,094,177.

Patented Apr. 21, 1914.

2 SHEETS—SHEET 2.

Fig. 3

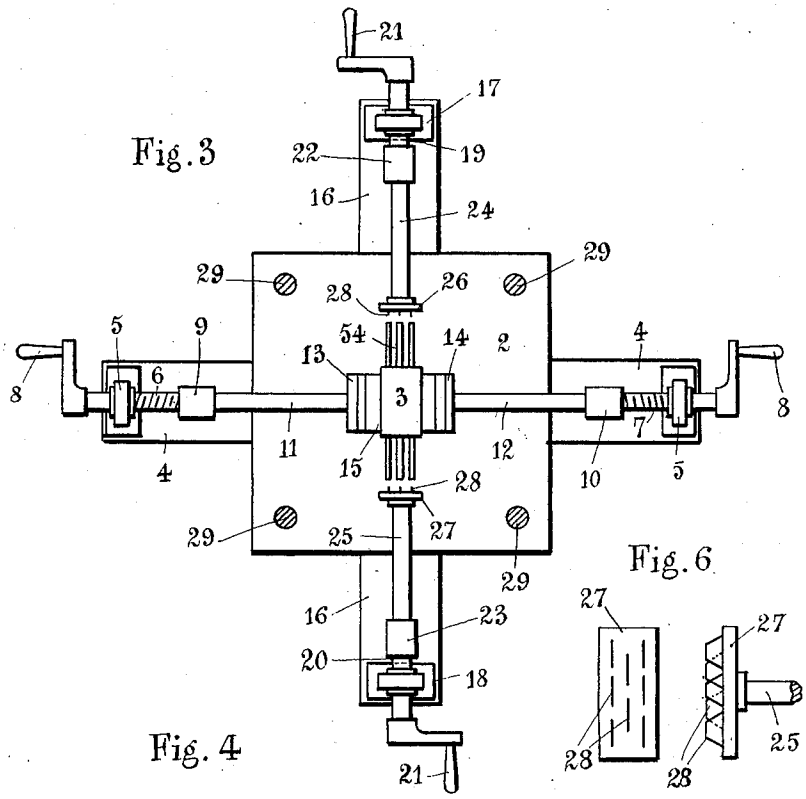

Fig. 4

Fig. 6

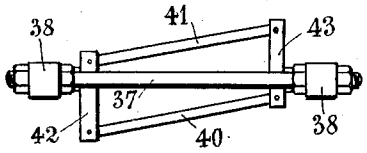

Fig. 5

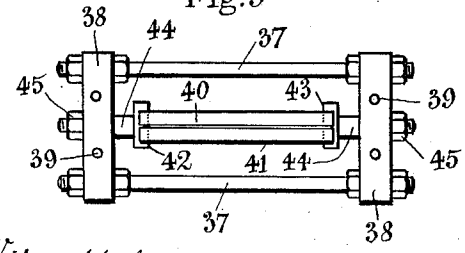

Fig. 7

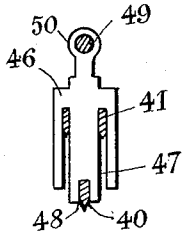

Fig. 8

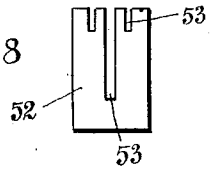

Witnesses:
Charles Blondel
Victor Marendowski

Inventor:
Charles Sudre

COLUMBIA PLANOGRAPH CO., WASHINGTON, D. C.

UNITED STATES PATENT OFFICE.

CHARLES SUDRE, OF RENAZÉ, FRANCE.

APPARATUS FOR SPLITTING SLATE BLOCKS AND THE LIKE.

1,094,177. Specification of Letters Patent. **Patented Apr. 21, 1914.**

Application filed April 17, 1912. Serial No. 691,280.

To all whom it may concern:

Be it known that I, CHARLES SUDRE, a citizen of the Republic of France, residing at Renazé, Department of Mayenne, in France, have invented new and useful Improvements in Apparatus for Splitting Slate Blocks and the like, of which the following is a full, clear, and exact description.

This invention relates to an improved apparatus for splitting slate blocks and the like.

Various methods and apparatus for the splitting of slate by mechanical means are already known, particularly those in which a block of slate is split by a knife or thin blade in such a way that it is first divided into two halves and then each half again split by itself, and so on until two pieces of slate are obtained each of the same thickness. According to another method the block is split simultaneously into a great number of pieces by means of a corresponding number of knives. These existing processes and apparatus have however the defect that the output in consequence of the excessive waste is very low particularly owing to the fact that the resilience or elasticity of the slate is not taken into account.

The apparatus which forms the object of this application is based upon a different method.

Splitting by hand has shown that the individual sheets of slate have undoubtedly a small degree of elasticity and only break when they are too much bent during splitting that they go beyond their angle of flexibility, that is to say, if the block of slate is subjected to such a strain that the breaking point is exceeded. The edge of the splitting knife should never show a greater angle than the double angle of flexibility of the slate. If this double angle is exceeded then the slate breaks while being split. The same thing occurs if the splitting edge is applied in too great a length to the sheet of slate as there is then a risk of cutting the splitting surface. Finally the stone may also be defective so that rigid, that is, non-flexible knives produce an irregular split. By the application of this method these drawbacks are diminished and a much larger number of regular sheets or slabs of slate are produced. It consists of splitting up a block of slate in one operation into 2, 4, 8, 16, 32 etcetera sheets according to the thickness of the block and of the sheets or slabs it is desired to produce. This is effected by grooving the stone on two opposite sides by means of spikes or small blades carried by suitable supports and it is then split completely from the top that is from a third side. The operation is effected by means of several thin blades, inclined and arranged in steps. The operation is commenced at the center of the block by using one knife the cutting edge of which should not be at a greater angle than the double angle of flexibility of the slate. The side knives 2, 4, 8 etc. are however placed in steps the one above the others. They are also thinner and their cutting edge in no case exceeds the single angle of flexibility of the slate. In consequence of this, the slate when being split is not subjected to a strain in excess of the breaking point, the splitting is easily effected, and as much waste is prevented as possible.

The apparatus for carrying out the invention consists essentially of a horizontal table on which the block of slate to be split rests on its under side, a couple of resilient supports to seize and hold the stone on two sides parallel to the plane of cleavage, a pair of lateral supports carrying spikes or small blades and a frame to carry the splitting knives, supported by a slide which can move up and down vertical rods. The knives which penetrate the block of slate are intended together with the lateral small blades, to fix the direction in which the block of slate is to be split and should correspond with this. By means of the grooves the stone is arranged in such a way as to facilitate the splitting, and shape it more regularly. Owing to the flexible knives being arranged obliquely to the stone any cutting of the splitting surface is avoided, and the flexible blade follows the splitting surface exactly. The arrangement of the knives in rows, one above the other is intended to effect the same purpose of regular splitting with small waste. The bottom knife has a cutting edge, the angle of which is smaller than the double angle of flexibilitiy of the slate, while in the top knives the cutting edge must be smaller than the single angle of flexibility. The number of rows in which the knives are arranged may be varied according to the number of sheets or slabs to be cut out of a block. For instance, if 16 sheets are to be produced from one block, there would be four rows of knives, the

number being double in each consecutive row. The separate rows of knives may also be arranged on a single frame or on several frames independent of each other. They may also be all actuated together or gradually in succession and in any manner, that may be desired.

The accompanying drawing shows by way of example a machine for splitting a slate block into four pieces.

Figures 1, 2 and 3 show the apparatus in elevation, side elevation, and plan partly in section. Figs. 4 and 5 show an elevation and plan of the frame carrying the knives. Fig. 6 shows a front elevation and side elevation of the grooving arrangement. Fig. 7 shows a rider placed on the knives. Fig. 8 shows a bar of the grating forming the table. Fig. 9 shows in plan the frame supporting the guide rod for the rider of Fig. 7.

The frame 1 carries a table 2, on which the block of slate 3 rests. Underneath the table is a girder or beam 4 which is provided with bearings 5, for the screw spindles 6 and 7 which are actuated by cranks 8. Each of the spindles 6 and 7 carries a nut 9 and 10 to which resilient supports 13, 14 are attached by the rods 11, 12. The front surface of these supports is provided with a covering 15 of rubber or other suitable material so that the block of slate 3 is maintained between them.

The inner surfaces of the supports 13, 14 are curved to enable the block of slate 3 to be kept fixed as well as possible. At right angles to the beam 4 a second beam 16 is mounted under the table and provided with two bearings 17, 18 for the screw spindles 19, 20 which are driven by cranks 21. Nuts 22, 23 are mounted on these spindles, and transmit their motion to the supports 26, 27 connected with them by rods 24, 25. These supports are provided with small blades or spikes which are arranged as shown in Fig. 6.

The four standards 29 serve to guide the slide which carries the splitting knives. This slide is preferably made of two frames 30, 31 connected with each other by sleeves 32. The weight of the slide is counterbalanced in any suitable manner, so that it can move up and down easily. A cam 33 is mounted on the rod 34 actuated by the crank 35 and engages projection 36 on the slide. This projection is affixed to the top of the frame 31. The slide is pressed down by turning the crank 35.

A frame carrying the knives is affixed by pins which pass through the openings 39, to the bottom 30 of the slide. This frame consists of two longitudinal sides 37, which are connected with each other by cross pieces 38.

Square rods 44 pass through the cross pieces 38 and are held firmly in position by nuts 45. Both rods 44 are provided at the ends with two holders 42, 43 between which the knives 40, 41 are clamped so that they always stand vertically and the tension can be increased or diminished by tightening or loosening the nut 45. The rods 44 are arranged in the cross pieces 42, 43 so that they incline to the horizontal (Fig. 4).

If the apparatus is provided with two rows of knives they are divided into uneven numbers as follows:—One knife 40 is the thicker viz:—about 1 millimeter thick and the angle of its cutting edge is smaller than that of the double angle of flexibility of the slate. The two knives 41 are thinner, *i. e.*, only about ½ millimeter thick and the angle of their cutting edge is smaller than the single angle of flexibility of the slate. The knives 41 are arranged in an upper row, which is some centimeters higher than the lower row containing the thicker knife so that this has penetrated the slate block before the second row of knives begins its action. As the knives are only about two centimeters wide and are arranged in different rows the incision made by the lower knives has the tendency to close again during the action of the upper blades so that the flexion of the slate can act on both sides of the knife. By this arrangement of the knives several sheets of slate of any desired thickness can be split off in one operation without the breaking point of the slate *i. e.*, the angle of flexibility being exceeded waste being thus to a great extent avoided. If it is desired to fill up the intervening space arising from the passing through of the knife, a sheet of rubber or other flexible material can be placed into the split behind the knives. In order to prevent the knives from springing or becoming warped, a rider 46 placed upon the knives is used during the splitting. This rider consists of a piece of metal in which grooves 47, 48 have been cut to receive the knives 40—41.

The grooves 48 are intended to receive the thicker knives 40 which project from them only about 2 millimeters, while the grooves 47 must be cut deeper in consequence of the position of the thin knives being higher. The rider 46 can be pushed to and fro on an adjustable guide rod 49 while its head 50 encircles the guide rod 49 which rests on a light frame 51, which slides to and fro on the guide rod 29. In consequence of this arrangement the rider will then occupy the position shown in Fig. 7 when the knives begin to penetrate the slates and will remain in the same position during the complete operation.

In the same way the table 2 is provided with blocks 52 to receive the knives when they have reached the underside of the block of slate. The blocks 52 are provided with grooves 53 (Fig. 8) or may be in the form of a grating 54. The stone to be split rests

on the bars of this grating which serves as a bearing for the stone and at the same time receives the knives which have split the latter.

The apparatus works as follows:—After the requisite number of knives have been inserted and their distance from each other adjusted according to the thickness of the sheets or slabs of slate which have to be split off, the block of slate is put upon the table 2, and maintained in position between the supports 13, 14. Then the supports 26, 27 carrying the spikes 28 for making the grooves and preparing the stone for splitting at the desired points are firmly pressed in and are afterward removed again, in order to allow the cutting knives to go through the slate. The slide 32 is then pressed down and the bottom knife 40 strikes first upon the block and commences to split it when the rider 46 remains at its place. The top knives 41 then commence to split the second series of slate slabs. When the splitting is finished the supports 13, 14 are released, the slide drawn up, the split block taken out, and replaced by a fresh one. Moreover, with the same apparatus a block of slate can be split beginning at one end. In this case a single knife only 2/10 millimeters thick, is used, one of the supports 13, 14 remains permanently fixed, while the other serves to hold and displace the block after each splitting and to remove the piece split off.

I claim:—

1. Apparatus for splitting blocks of slate or the like into two, four, eight, sixteen etc. numbers of slabs or sheets comprising in combination a table for supporting the block provided with a grooved surface for receiving the splitting knives, two side supports to seize and hold the block on two sides parallel to the plan of cleavage, actuating rods attached to said supports, a cover of resilient material fixed upon said supports, two supports arranged on opposite sides of the block, actuating rods attached to said second supports, grooving blades carried by said rods, means for driving said actuating rods, a sliding carrier for splitting knives, a number of thin inclined flexible knives arranged in rows for splitting the block, a frame, an adjustable rod of said frame, a rider on said rod to receive the knives, and means for actuating the splitting knives substantially as above described and for the purpose set forth.

2. Apparatus for splitting blocks of slate or the like into two, four, eight, sixteen etc. numbers of slabs or sheets comprising in combination a table for supporting the block, said table having grooves for receiving the splitting knives, two side supports for holding the block, two supports with grooving blades, means for actuating the said supports, a sliding carrier for splitting knives, a number of splitting knives arranged at an inclination and mounted on rows one above the other, the lower knife being thicker and having its cutting edge smaller than the double angle of flexibility of the slate, the other knives being thinner and having their cutting edge smaller than the single angle of flexibility of the slate, a frame with adjustable rod; a rider on said rod to receive the knives and grooved or recessed to correspond with the rows of splitting knives, and means for actuating the splitting knives substantially as above described and for the purpose set forth.

3. Apparatus for splitting blocks of slate or the like into two, four, eight, sixteen etc. numbers of slabs or sheets comprising in combination a table for supporting the block, said table having grooves for receiving the splitting knives, two side supports for holding the block, a cover of resilient material for said side supports, two supports with grooving blades, means for actuating the said supports, a sliding carrier for splitting knives, a number of splitting knives arranged at an inclination and mounted on rows one above the other, the lower knife being thicker and having its cutting edge smaller than the double angle of flexibility of the slate, the other knives being thinner and having their cutting edge smaller than the single angle of flexibility of the slate, a frame with adjustable rod; a rider on said rod to receive the knives and grooved or recessed to correspond with the rows of splitting knives, and means for actuating the splitting knives substantially as above described and for the purpose set forth.

CHARLES SUDRE.

Witnesses:
H. C. Coxe,
Victor Marendowski.

Copies of this patent may be obtained for five cents each, by addressing the "Commissioner of Patents, Washington, D. C."