June 24, 1930. B. R. PLANCHE 1,766,001

CONTROL PLUG UNIT FOR SPLASH FEED LUBRICATING SYSTEMS

Filed Jan. 3, 1929 2 Sheets-Sheet 1

Fig. 1

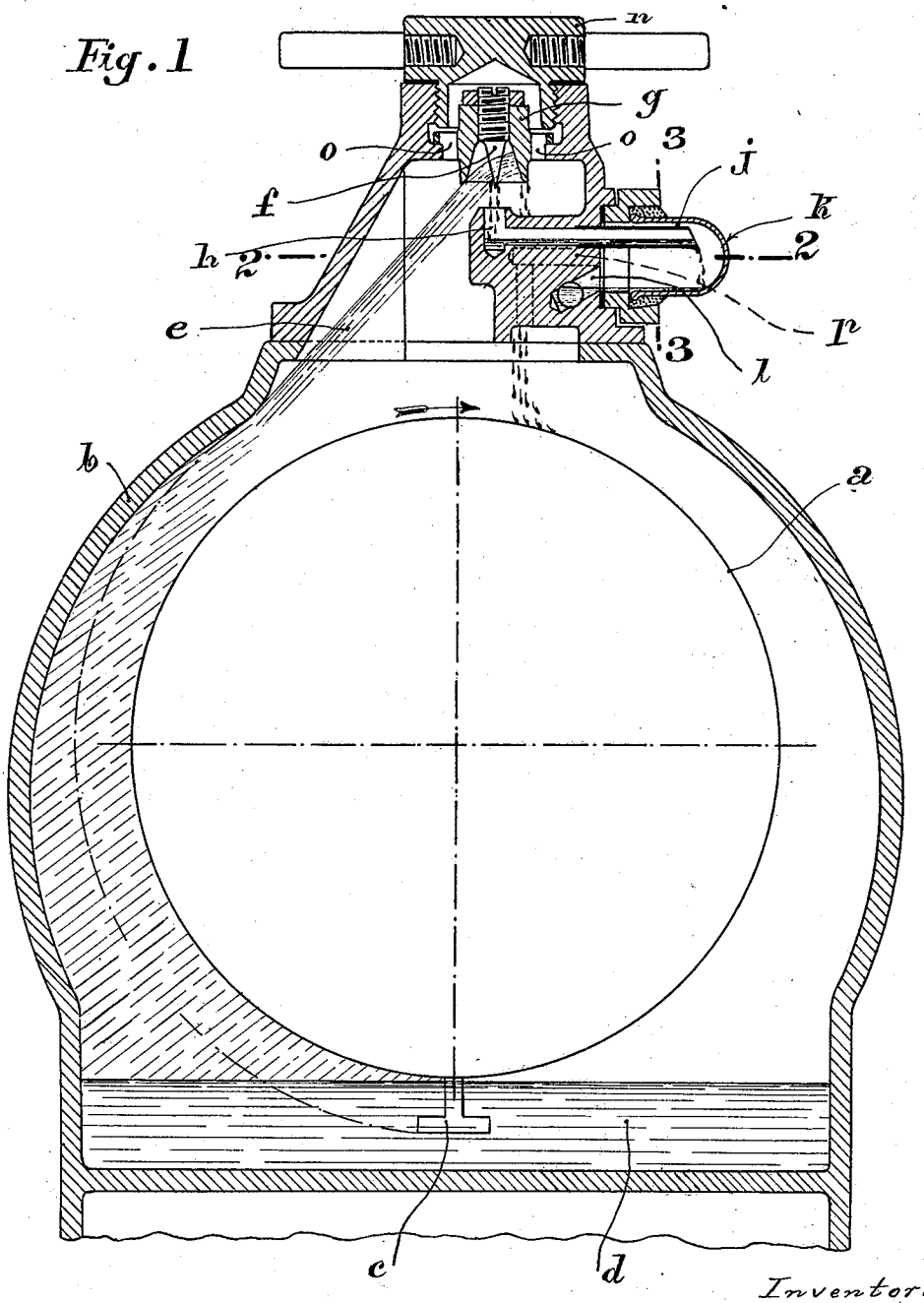

Inventor:
Benjamin René Planche
By Louis Pomiélzke
Attorney.

June 24, 1930. B. R. PLANCHE 1,766,001

CONTROL PLUG UNIT FOR SPLASH FEED LUBRICATING SYSTEMS

Filed Jan. 3, 1929 2 Sheets-Sheet 2

Fig. 2

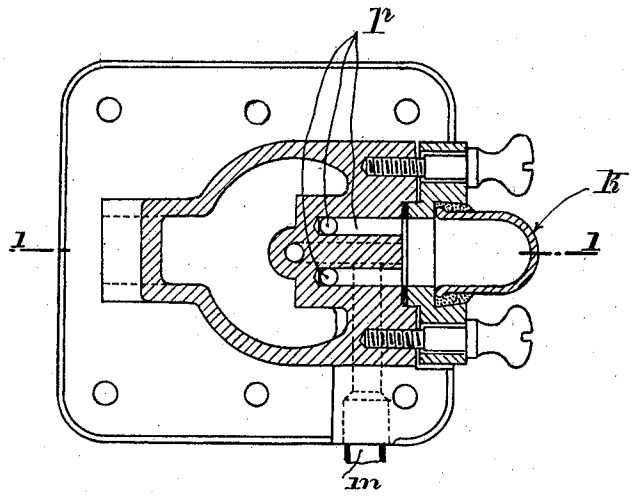

Fig. 3

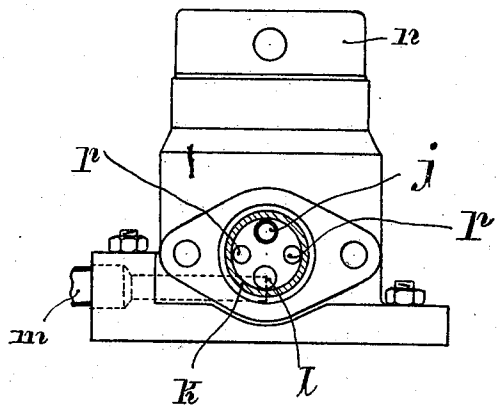

Inventor:
Benjamin René Planche
By Luis Pomielzke
Attorney

Patented June 24, 1930 1,766,001

UNITED STATES PATENT OFFICE

BENJAMIN RENÉ PLANCHE, OF VILLEFRANCHE-S-SAONE, FRANCE

CONTROL-PLUG UNIT FOR SPLASH-FEED LUBRICATING SYSTEMS

Application filed January 3, 1929, Serial No. 330,115, and in France January 14, 1928.

This invention relates to improvements in control plug units for splash feed lubricating systems.

In lubricating rotating mechanism either an ordinary drip feed lubricator or a pressure lubricator operated mechanically by the machine itself are employed.

The first of these apparati is one of uncertain operation and it requires moreover to be opened and regulated at each starting of the machine and then closed at each stoppage.

The second system of mechanical lubrication under pressure is obviously more preferable, unfortunately its cost is high and it necessitates also a mechanical control which is sufficiently burdensome.

The arrangement according to the present invention has the advantage of being entirely automatic of stopping and restarting when the machine is stopped and started and of being moreover certain in operation having no part susceptible of derangement or stopping up.

It is applicable to all types of rotary machines and more especially to compressors to the rotary piston comprising a flywheel which is generally contained in an airtight casing.

It is essentially characterized in this that the lubricating oil contained in the lower part of a casing is circulated mechanically in a fine spray along a trajectory on the edges of which is arranged a screen or adjustable register which according to its position stops a greater or less quantity of oil which it thus forwards by gravity into an orifice and appropriate canals to the points to be lubricated.

The present invention also includes as part of this principle arrangement and employed preferably with it different particular arrangements which will be more fully described later as follows:—An arrangement for returning the oil not used to the casing, a control sight for the circulation, an arrangement for balancing the pressures.

It will be fully understood with reference to the complementary description which follows and to the annexed drawings which description and drawings are given by way of example:—

Fig. 1 is a section on line 1—1 Fig. 2.

Fig. 2 is a section on line 2—2 Fig. 1.

Fig. 3 is a section on line 3—3 Fig. 1.

A T or lubricating fin c is screwed into the flywheel, a rotating in the casing of the compressor b. At the bottom of the casing a given quantity of oil d is stored the maximum level of which is such that it is flush with the flywheel without touching it.

Under these conditions if the machine is turned the flywheel rotates and the lubricating fin dips at each revolution in the oil under the influence of the speed of rotation, this lubricating fin circulates the oil against the casing upon arriving at the upper portion of its travel though rid of the greater part of the oil that it had picked up at the base, it still contains enough to send a fine spray tangentially to the flywheel a.

It should be noted that whatever the level of the oil may be, owing to the shape of the fin, approximately the same projection will be given since there is always the same surface of fin in the oil at each revolution, approximately all the surface being arranged at the end of the fin so that it will still dip into the oil when the level in the casing is a minimum.

Some of the spray projected into the space e comes in contact with a projection f whilst the remainder is stopped by a curved hollow member g.

In line with the pointed projection f a hole h is provided forming a kind of receptacle which is in communication with lubricating points through the ordinary duct j opening into a glass sight k. From there the oil flows to the points to be lubricated through orifices l and pipes m.

It is easy to see that in this way when the machine is running that oil is circulated and lubrication established whilst on the other hand when stationary the circulation ceases and the lubrication stops.

To regulate the quantity of oil which emerges from the end of the pipe j that is to say the quantity of oil which goes to lubricate the machine the pointed projection f

is screwed or unscrewed to a greater or less extent into the member *g*.

If this point *f* is screwed up to its maximum that is to say if it is raised the circulation of oil *e* will immediately reach the hollow member *g* the oil will congregate on this member *g* and drip off it without falling into the lubricating hole *h*.

If on the other hand the point *f* is screwed down it enters automatically into the path of the projection and presents a larger surface thereto as it is lowered. A certain number of globules will be stopped a greater number in proportion as it is lowered. These globules collect at its base and fall into the lubricating hole *h*.

All this arrangement is covered in by a plug cap *n* which permits at the same time the refilling of the casing *b* with oil.

For this purpose the member *g* is provided around its periphery with holes *o* through which holes the oil can pour into the casing whilst the members *f* and *g* themselves prevent the oil thus poured from falling into the lubricating hole which is covered by the member *g*.

In order that the arrangement shall operate well it is necessary that the pressure at the lubricating points should be exactly the same as the pressure inside the casing so that the oil will flow by gravity to the lubricating points without being impeded by the gaseous currents which would either drive it back or impede its free flow or on the other hand draw it in too quickly.

For this purpose pressure equalizing holes are formed in the machines so that the pressure in the interior of the lubricating points will be the same as that in the casing.

To avoid small variations in pressure inside the glass sight *k* which would inconvenience the circulation of the globules of oil over the glass and thus render it less transparent at the same time that would give rise to the inconvenience of impeding the drops forming at the end of the tube *j* from falling vertically and thus to give good visibility pressure equalizing holes *p* are provided between the casing *c* and the interior of the sight *k* so arranged that:—

1. The oil flowing to the hole *j* cannot reach the holes *p* these latter being placed higher up than the feed holes.

2. The circulation of oil caused by the flywheel cannot either reach the holes *p* to return to the glass sight *k* and from there to the lubricating points *l* which would completely upset the regulation of the lubrication.

Some arrangements are still provided in which a certain pressure is maintained inside the casing *c* and the plug cap *n* cannot be unscrewed entirely without allowing this pressure to fall to atmospheric value, in order that the plug cap shall not be shot off when the last thread loosens.

It must be understood that the arrangement comprises the necessary sights for verifying the oil level in the casing which should always be between the maximum and minimum levels.

As has been stated and from the preceding, the description of same and the drawings referred to above are not limiting and the invention is not limited to the above described method nor to its various parts.

It includes on the contrary all variations based on the same principle of operation and applies to all types of rotary machines, compressors, change speed gearing and the like and in general to all machines comprising moving parts and to lubricating points arranged below the highest projection point.

What I claim as my invention and desire to protect by Letters Patent is:—

1. A lubricating system for rotary engines comprising a casing, a flywheel within the casing, a hollow internally domed plug screwed into the top of the casing, a pointed member screwed into the hollow plug, a fin on the flywheel to lift oil from the bottom of the casing and project it into the hollow plug, and on to the pointed member and an apertured delivery pipe below the pointed member to receive the oil dripping therefrom and feed it to the lubricating points.

2. A lubricating system for rotary engines comprising a casing, a flywheel within the casing, a hollow internally domed plug screwed into the top of the casing, a pointed member screwed into the hollow plug, a fin on the flywheel to lift oil from the bottom of the casing and project it into the hollow plug and on to the pointed member, an apertured delivery pipe below the pointed member to receive the oil dripping therefrom and a sight feed glass through which the oil passes on its way to the lubricating points.

3. A lubricating system for rotary engines comprising a casing, a flywheel within the casing, a hollow internally domed plug screwed into the top of the casing, a pointed member screwed into the hollow plug, a fin on the flywheel to lift oil from the bottom of the casing and project it into the hollow plug and on to the pointed member, an apertured delivery pipe below the pointed member to receive the oil dripping therefrom, means to vary the position of the pointed member in the hollow plug, and a sight feed glass through which the oil passes on its way to the lubricating points.

4. A lubricating system for rotary engines comprising a casing, a flywheel within the casing, a hollow internally domed plug screwed into the top of the casing, a pointed member screwed into the hollow plug, a fin

on the flywheel to lift oil from the bottom of the casing and project it into the hollow plug, and on to the pointed member, an apertured delivery pipe below the pointed member to receive the oil dripping therefrom, means to vary the position of the pointed member in the hollow plug, a sight feed glass through which the oil passes on its way to the lubricating points and means to equalize the pressure in the casing and at the lubricating points.

In testimony whereof I affix my signature.

BENJAMIN RENÉ PLANCHE.