R. H. STILWELL.

Pail, and Combined Hoop and Ears.

No. 201,066. Patented March 5, 1878.

Fig. 1.

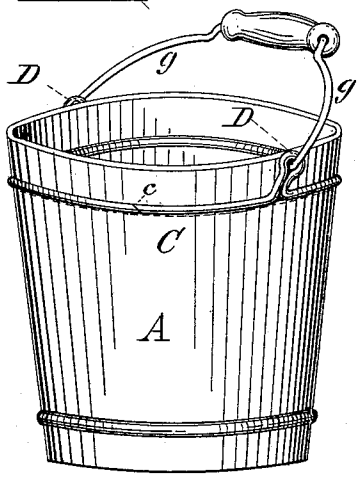

Fig. 2.

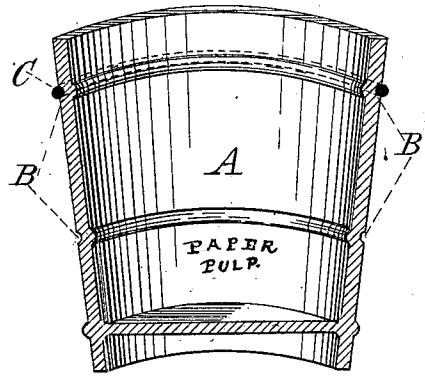

Fig. 3.

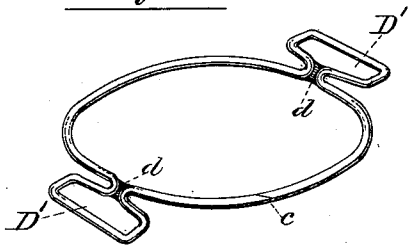

Fig. 4.

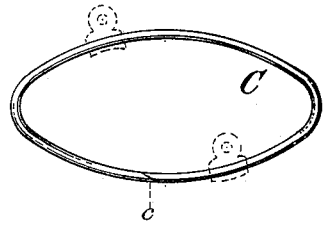

Attest:

Chas. M. Higgins
Edward K. Wales

Inventor:

Rinaldo H. Stilwell
Per
S. H. Wales & Son
Att'ys.

N. PETERS, PHOTO-LITHOGRAPHER, WASHINGTON, D. C.

UNITED STATES PATENT OFFICE.

RINALDO H. STILWELL, OF STOCKTON, NEW JERSEY.

IMPROVEMENT IN PAILS AND COMBINED HOOP AND EARS.

Specification forming part of Letters Patent No. **201,066**, dated March 5, 1878; application filed November 28, 1877.

To all whom it may concern:

Be it known that I, RINALDO H. STILWELL, of Stockton, Hunterdon county, New Jersey, have invented certain new and useful Improvements in Pails, &c., of which the following is a specification:

The novel features constituting this invention relate more especially to the hoop and bail-ear portion of the pail, and have especial reference to the construction of the hoop, the formation of the bail-ears or handles, and the connection of the same with the pail.

The main object of my invention is to improve the construction and mode of attachment of hoops and bail-ears, so as to combine the hoop and bail-ear or lifting-handle in one and the same article, so that the attachment of the hoop to the pail shall form in itself the means also of attaching the ear or handle without any other fastening.

The essential features of my invention may therefore be stated to consist in a readily attachable and removable hoop formed of wire, and adapted to be sprung into a socketing-groove of the pail, and having the bail-ears or handles formed directly thereon by loops or bends in the composing material of the hoop.

In the annexed drawing, Figure 1 presents a perspective view of a pail provided with my improvements. Fig. 2 is a vertical section thereof; and Figs. 3 and 4 are perspective views of my improved hoop in different forms, shown removed from the pail.

My invention has been more especially designed for use on pails and similar vessels of papier-maché.

In the construction of these articles, in which I am largely engaged, it has been found quite desirable to obtain some simple and efficient method of attaching the hoops and the bail-ears or handles without the use of nails, rivets, or such fastenings. The walls of these vessels are usually too thin to give a good hold to nails or tacks, and, besides, the material is of such a tough and almost impenetrable nature that a nail is with difficulty driven into it, and when driven, is not held with much security. At present, therefore, the bail-ears and hoops are attached by rivets. These require holes to be bored through the sides of the vessel for their reception, and, altogether, attachments in this manner are attended with much more trouble and expense than is considered warranted.

Papier-maché pails, I should add, are not usually hooped around the body, as is the more common wooden pail, although it has been considered desirable to provide a hoop near the mouth of the pail, which would impart greater firmness thereto and admit of the vessel being made of lighter stock, with a consequent saving of cost; but for the reasons indicated no entirely satisfactory mode of attaching the hoop has heretofore presented itself. These, therefore, are the desirable requirements which it is the aim of my invention to fulfill, and the means by which I accomplish the same will be now specifically described.

As shown in Figs. 1 and 2, A is the pail, which I provide with circumferential grooves or corrugations B, extending horizontally around the pail at points where it is desired to provide a hoop. These corrugations are adapted as sockets for the reception of the hoops, and are preferably continued through the wall of the pail, so as to appear bulged or convex on the interior, as shown in the drawing, and thus assist at the same time in stiffening the pail.

The hoop is formed of an elastic ring of wire, as shown at C in Fig. 4, of preferably a round section, to present a surface of protrudent contour, adapted to readily engage with the socketing-groove B of the pail. The ends of the wire are joined to form the ring by brazing or otherwise, so as to present a smooth and uniform joint, free from protuberances, as indicated at *c c* in Figs. 1, 3, and 4. The ring C is formed of a snug fit for that part of the pail for which it is intended, and it is attached by slipping it onto the pail, crowding it toward the groove, and springing it into the same, where it thus becomes securely socketed, firmly embracing the pail, imparting a desired firmness thereto, and requiring no further fastening.

For the ordinary paper pail but one of these hoops is required, and this is applied, as shown in Fig. 1, near the mouth of the pail, and on the line where the bail-ears are usually attached.

To provide the ears for the attachment of the bail, I form the same directly on the encircling hoop itself. This, however, is not essential, as the ears may also be formed separately from sheet metal or other material, and then soldered or otherwise fixed firmly to the hoop, as shown by dotted lines in Fig. 4.

By this means the hoop and the ear are combined in the same article, so that the attachment of the hoop serves at the same time to securely attach the ears, and this without any fastening penetrating the material of the pail, as at present.

It will thus be readily observed that, while this construction enables such fastenings to be wholly dispensed with, the connection of the ears with the pail is not only thus rendered more simple and ready, but it is at the same time also much more secure than when the ears are separately fixed to the pail, and for the purposes of my invention this method is peculiarly adapted.

For vessels requiring lifting-handles instead of bails, the handles, like the ears, are also formed directly on the hoop by bending loops in the composing wire of the hoop of a size and shape adapted to the grasp of the hand, as shown at D' in Fig. 3. The meeting ends of the loops, as shown at *d d*, Figs. 1 and 4, may be soldered or bound with fine wire, for greater strength; but it is not essential.

The described mode of forming the ears or handles directly on the hoop by bending loops in the composing material thereof will, of course, also apply to a hoop made of sheet metal; but I much prefer the wire shown, which is simpler, less expensive, and more adapted for the purposes of my invention.

Although, as before stated, my invention is specially adapted for vessels of papier-maché, it is, of course, not confined thereto, but is also applicable to wooden and metal pails; and to adapt wooden pails for my invention it is only necessary to turn a small groove therein while the pail is being finished in the lathe.

I thus, by a very simple means, form the handles or ears and the hoop in one and the same article, and attach the same firmly to the pail without any independent fastening penetrating the material of the pail, but simply by means of a mutually adapted construction of both pail and hoop, the whole being of a simple, inexpensive character, readily and quickly attached, and thus fully accomplishing the object of my invention.

Having thus described my invention, the features which I claim as new, and desire to secure by Letters Patent, are as follows:

1. The combination of a pail or similar vessel, provided with a circumferential socketing-groove, with an elastic hoop-ring of wire sprung into the said groove, substantially as shown and described.

2. As a new article of manufacture, a removable and readily attachable pail-hoop formed of wire, and having the bail-ears or handles formed directly thereon by loops or bends in the composing wire of the hoop, substantially as herein shown and described.

In witness whereof I have hereto subscribed my name in presence of two subscribing witnesses.

RINALDO H. STILWELL.

Witnesses:

CHAS. M. HIGGINS,

S. H. WALES.