(12) INTERNATIONAL APPLICATION PUBLISHED UNDER THE PATENT COOPERATION TREATY (PCT)

(19) World Intellectual Property Organization
International Bureau

(43) International Publication Date
6 March 2014 (06.03.2014)

WIPO | PCT

(10) International Publication Number
WO 2014/035926 A3

(51) International Patent Classification:
*E04C 2/26* (2006.01)

(21) International Application Number:
PCT/US2013/056730

(22) International Filing Date:
27 August 2013 (27.08.2013)

(25) Filing Language: English

(26) Publication Language: English

(30) Priority Data:
13/597,620 29 August 2012 (29.08.2012) US

(71) Applicant: **SPRAY ROCK LLC** [US/US]; 1391 Alpha Court N., West Palm Beach, Florida 33406 (US).

(72) Inventor: **FRANCAVILLA, John Joseph**; 1391 Alpha Court N., West Palm Beach, Florida 33406 (US).

(74) Agent: **DIMAGGIO, Dale Paul**; Malin Haley DiMaggio & Bowen, P. A., 1936 S. Andrews Avenue, Fort Lauderdale, Florida 33316 (US).

(81) Designated States *(unless otherwise indicated, for every kind of national protection available)*: AE, AG, AL, AM, AO, AT, AU, AZ, BA, BB, BG, BH, BN, BR, BW, BY, BZ, CA, CH, CL, CN, CO, CR, CU, CZ, DE, DK, DM, DO, DZ, EC, EE, EG, ES, FI, GB, GD, GE, GH, GM, GT, HN, HR, HU, ID, IL, IN, IS, JP, KE, KG, KN, KP, KR, KZ, LA, LC, LK, LR, LS, LT, LU, LY, MA, MD, ME, MG, MK, MN, MW, MX, MY, MZ, NA, NG, NI, NO, NZ, OM, PA, PE, PG, PH, PL, PT, QA, RO, RS, RU, RW, SA, SC, SD, SE, SG, SK, SL, SM, ST, SV, SY, TH, TJ, TM, TN, TR, TT, TZ, UA, UG, US, UZ, VC, VN, ZA, ZM, ZW.

(84) Designated States *(unless otherwise indicated, for every kind of regional protection available)*: ARIPO (BW, GH, GM, KE, LR, LS, MW, MZ, NA, RW, SD, SL, SZ, TZ, UG, ZM, ZW), Eurasian (AM, AZ, BY, KG, KZ, RU, TJ, TM), European (AL, AT, BE, BG, CH, CY, CZ, DE, DK, EE, ES, FI, FR, GB, GR, HR, HU, IE, IS, IT, LT, LU, LV, MC, MK, MT, NL, NO, PL, PT, RO, RS, SE, SI, SK, SM, TR), OAPI (BF, BJ, CF, CG, CI, CM, GA, GN, GQ, GW, KM, ML, MR, NE, SN, TD, TG).

**Declarations under Rule 4.17**:

— *of inventorship (Rule 4.17(iv))*

**Published**:

— *with international search report (Art. 21(3))*

(88) Date of publication of the international search report:
30 July 2015

(54) Title: IMPROVED COMPOSITE CONCRETE AND FRAMING SYSTEM AND METHOD FOR BUILDING CONSTRUCTION

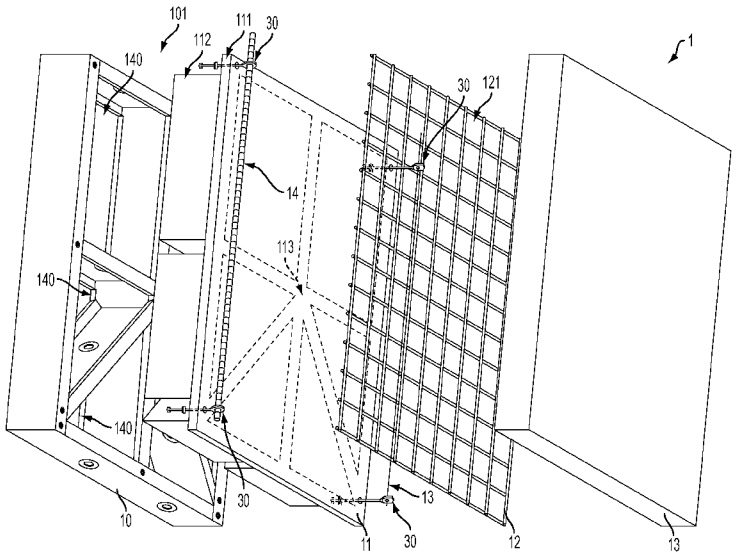


FIG. 1

(57) Abstract: A composite building construction system comprising a frame, an expanded wallboard, and a concrete layer. The wallboard comprises an outer portion and inset portion wherein the wallboard is attached to the frame with the outer portion covering an exterior side of the frame and the inset portion is disposed within the frame. The wallboard thus provides exterior and interior insulation for the system. The concrete layer is sprayed on to the outer portion of said wallboard, forming a strong durable composite construction system. One or more rebar supports may be attached to the frame at the exterior side by key bolts and are spaced apart from the wallboard. A wire grid may be attached to the key bolts whereby the grid and the rebar supports provide a support structure for the concrete layer. The frame comprises steel and the wallboard comprises insulative expanded polystyrene.

WO 2014/035926 A3

# INTERNATIONAL SEARCH REPORT

International application No.
PCT/US2013/056730

A. CLASSIFICATION OF SUBJECT MATTER
IPC(8) - E04C 2/26 (2013.01)
USPC - 52/742.14
According to International Patent Classification (IPC) or to both national classification and IPC

B. FIELDS SEARCHED

Minimum documentation searched (classification system followed by classification symbols)
IPC(8) - E04B 1/04, 2/84; E04C 2/04, 2/26, 2/38 (2013.01)
USPC - 52/309.12, 309.16, 309.17, 309.7, 410, 426, 588.1, 742.14, 745.19; 428/703

Documentation searched other than minimum documentation to the extent that such documents are included in the fields searched
CPC - E04C 2/384, 2/386, 2/288, 2/292 (2013.01)

Electronic data base consulted during the international search (name of data base and, where practicable, search terms used)
PatBase, Google Patents

C. DOCUMENTS CONSIDERED TO BE RELEVANT

| Category* | Citation of document, with indication, where appropriate, of the relevant passages | Relevant to claim No. |
|---|---|---|
| Y | US 4,970,838 A (PHILLIPS) 20 November 1990 (20.11.1990) entire document | 1-3, 5-9, 11-20 |
| Y | US 4,025,259 A (HOWE et al) 24 May 1977 (24.05.1977) entire document | 1, 5-7, 12-20 |
| Y | US 2011/0131914 A1 (RICHARDSON et al) 09 June 2011 (09.06.2011) entire document | 2, 3, 17-20 |
| Y | US 2010/0058686 A1 (HENRIQUEZ) 11 March 2010 (11.03.2010) entire document | 8, 9, 17-20 |
| Y | US 5,960,589 A (YOUNGQUIST et al) 05 October 1999 (05.10.1999) entire document | 11, 19 |

☐ Further documents are listed in the continuation of Box C. ☐

* Special categories of cited documents:
"A" document defining the general state of the art which is not considered to be of particular relevance
"E" earlier application or patent but published on or after the international filing date
"L" document which may throw doubts on priority claim(s) or which is cited to establish the publication date of another citation or other special reason (as specified)
"O" document referring to an oral disclosure, use, exhibition or other means
"P" document published prior to the international filing date but later than the priority date claimed
"T" later document published after the international filing date or priority date and not in conflict with the application but cited to understand the principle or theory underlying the invention
"X" document of particular relevance; the claimed invention cannot be considered novel or cannot be considered to involve an inventive step when the document is taken alone
"Y" document of particular relevance; the claimed invention cannot be considered to involve an inventive step when the document is combined with one or more other such documents, such combination being obvious to a person skilled in the art
"&" document member of the same patent family

| Date of the actual completion of the international search | Date of mailing of the international search report |
|---|---|
| 23 December 2013 | 09 JAN 2014 |
| Name and mailing address of the ISA/US<br>Mail Stop PCT, Attn: ISA/US, Commissioner for Patents<br>P.O. Box 1450, Alexandria, Virginia 22313-1450<br>Facsimile No. 571-273-3201 | Authorized officer:<br>Blaine R. Copenheaver<br>PCT Helpdesk: 571-272-4300<br>PCT OSP: 571-272-7774 |