US 20060271026A1

(19) **United States**

(12) **Patent Application Publication** (10) **Pub. No.: US 2006/0271026 A1**

Silvestrini et al. (43) **Pub. Date: Nov. 30, 2006**

(54) **METHOD AND APPARATUS FOR ALIGNING A MASK WITH THE VISUAL AXIS OF AN EYE**

(76) Inventors: **Thomas A. Silvestrini**, Alamo, CA (US); **Bruce A. Christie**, Upland, CA (US); **Kevin F. Hahnen**, Center Ossipee, NH (US); **Carl F. Knopp**, Livermore, CA (US)

Correspondence Address:
KNOBBE MARTENS OLSON & BEAR LLP
2040 MAIN STREET
FOURTEENTH FLOOR
IRVINE, CA 92614 (US)

(21) Appl. No.: **11/417,644**

(22) Filed: **May 3, 2006**

Related U.S. Application Data

(63) Continuation of application No. 10/854,032, filed on May 26, 2004.

(60) Provisional application No. 60/479,129, filed on Jun. 17, 2003.

Publication Classification

(51) **Int. Cl.**
A61B 18/18 (2006.01)

(52) **U.S. Cl.** **606/4**

(57) **ABSTRACT**

A method is provided for increasing the depth of focus of an eye of a patient. A visual axis of the eye is aligned with an instrument axis of an ophthalmic instrument. The ophthalmic instrument has an aperture through which the patient may look along the instrument axis. A first reference target is imaged on the instrument axis at a first distance with respect to the eye. A second reference target is imaged on the instrument axis with the ophthalmic instrument at a second distance with respect to the eye. The second distance is greater than the first distance. Movement is provided such that the patient's eye is in a position where the images of the first and second reference targets appear to the patient's eye to be aligned. A mask comprising a pin-hole aperture having a mask axis is aligned with the instrument axis such that the mask axis and the instrument axis are substantially collinear. The mask is applied to the eye of the patient while the alignment of the mask axis and the instrument axis is maintained. Maintaining alignment of the mask axis and the instrument axis may be facilitated by capturing an image of the eye.

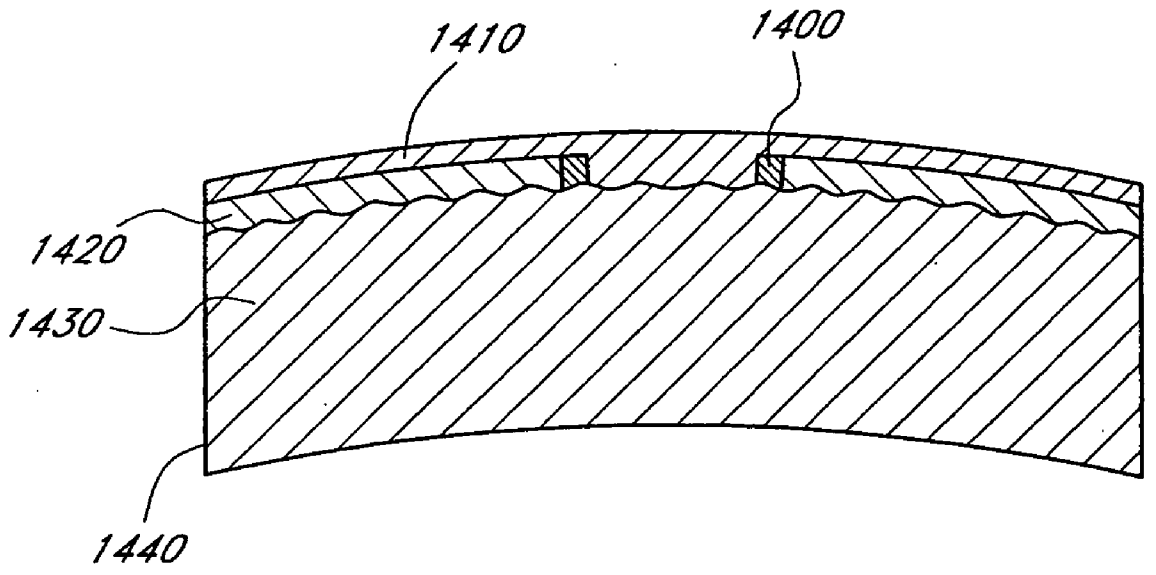

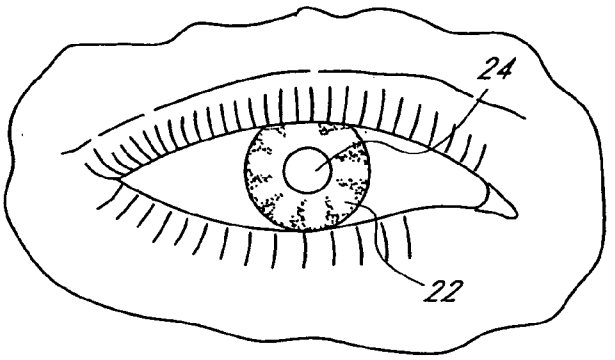

FIG. 1

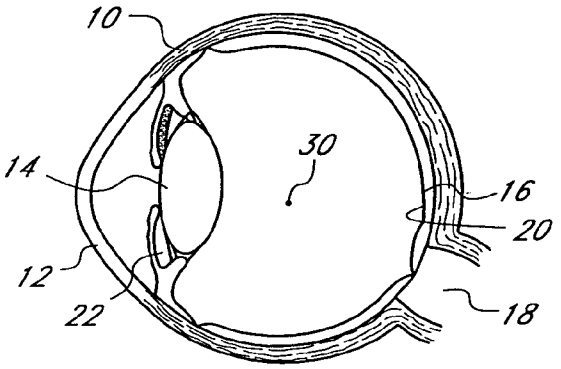

FIG. 2

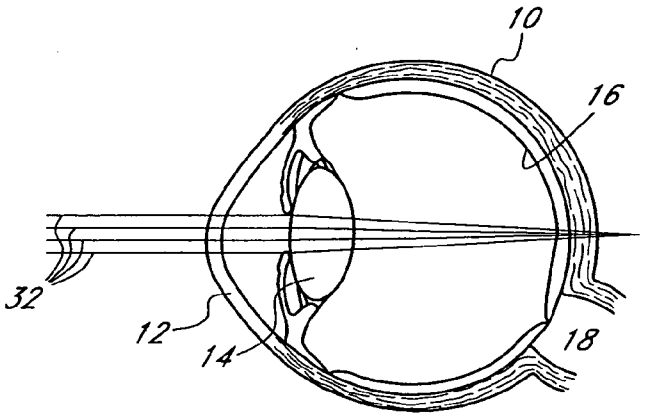

FIG. 3

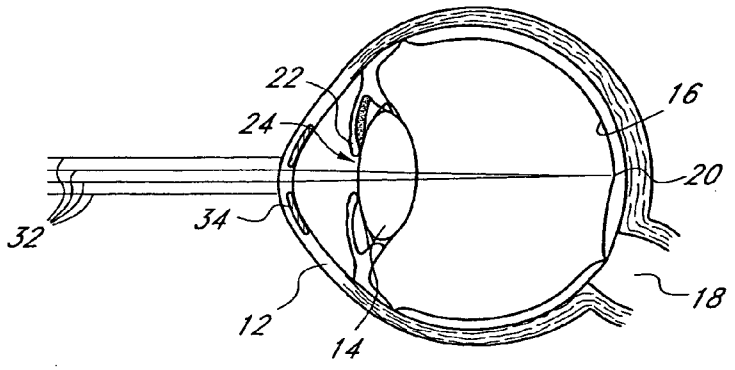

FIG. 4

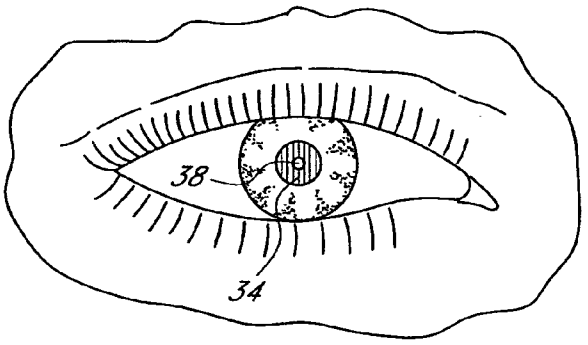

FIG. 5

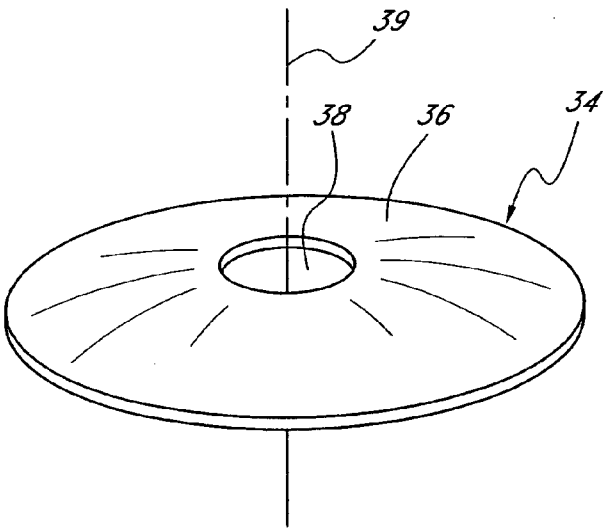

FIG. 6

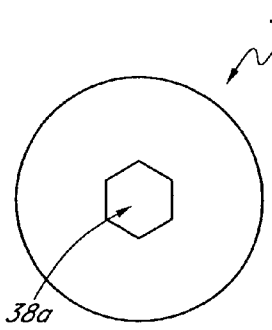

FIG. 7

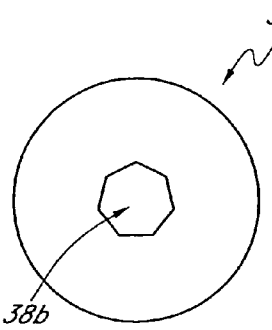

FIG. 8

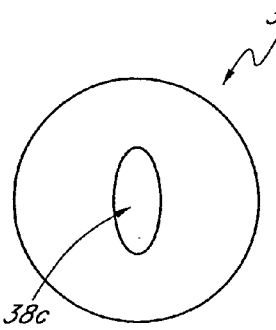

FIG. 9

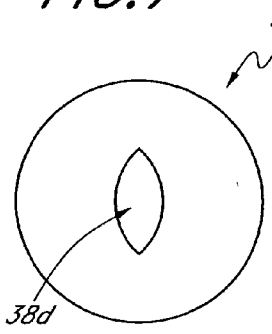

FIG. 10

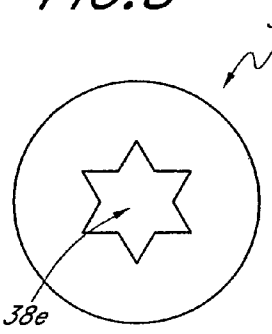

FIG. 11

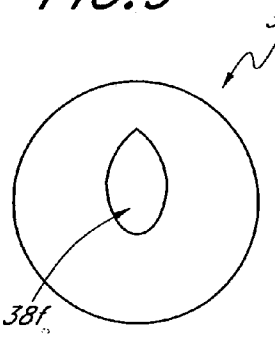

FIG. 12

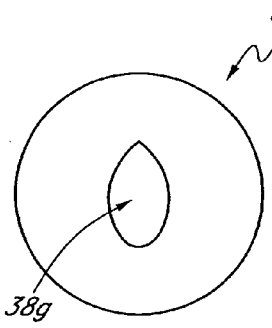

FIG. 13

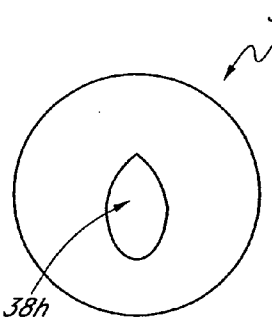

FIG. 14

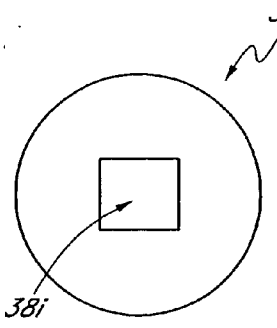

FIG. 15

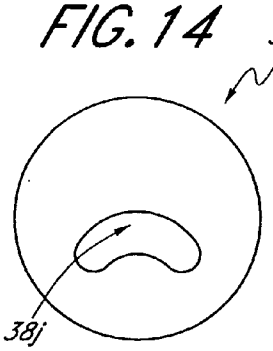

FIG. 16

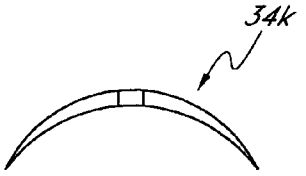

FIG. 17

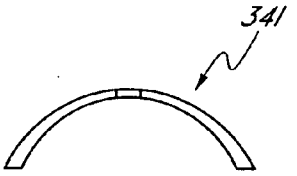

FIG. 18

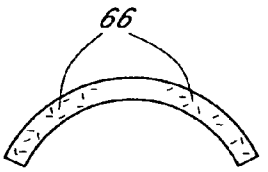

FIG. 19

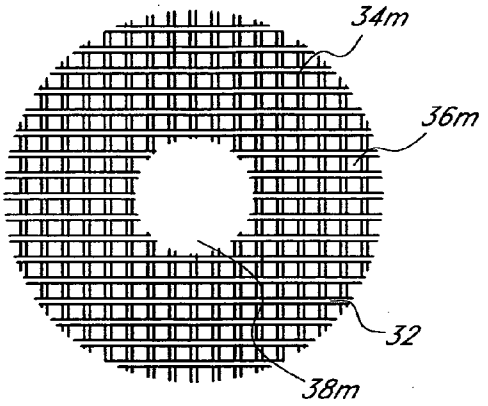

FIG. 20

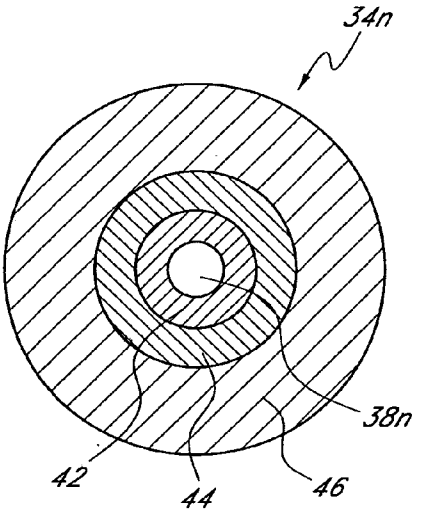

FIG. 22



FIG. 21

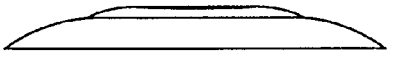

FIG. 23

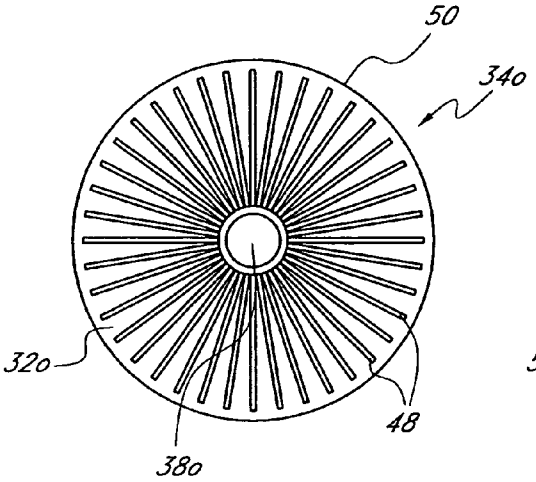

FIG. 24

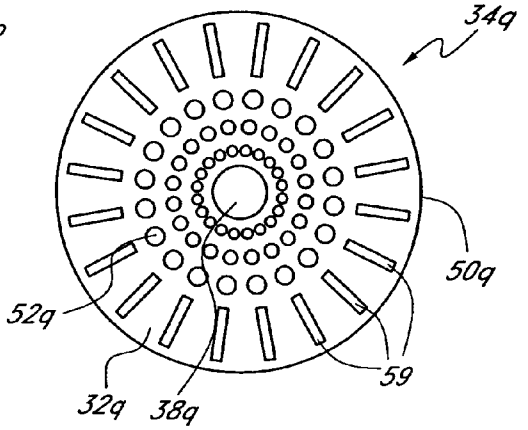

FIG. 28



FIG. 25

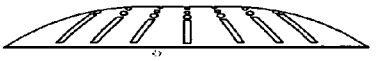

FIG. 29

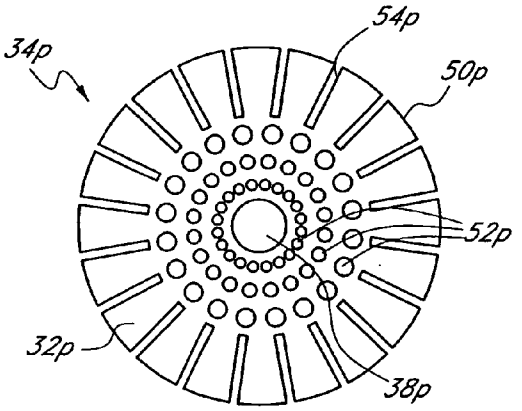

FIG. 26

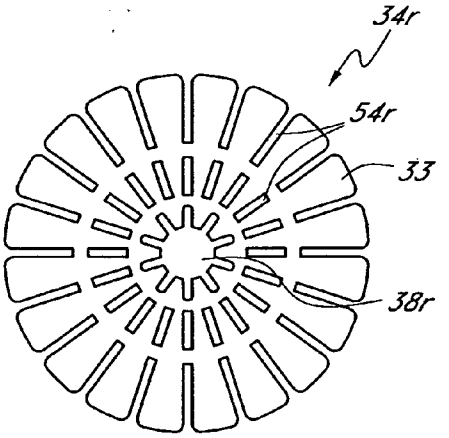

FIG. 30



FIG. 27



FIG. 31

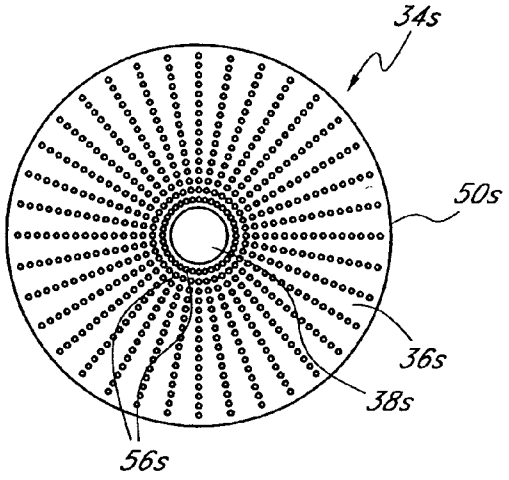

FIG. 32



FIG. 33

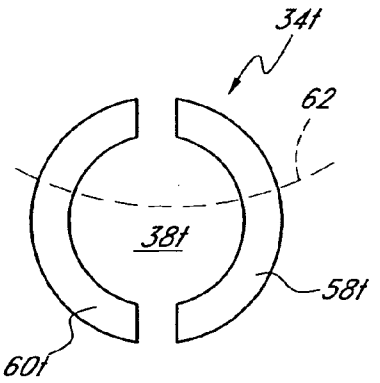

FIG. 34

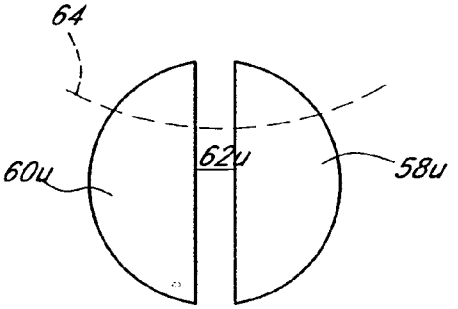

FIG. 35

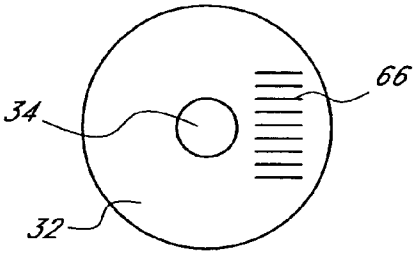

FIG. 39

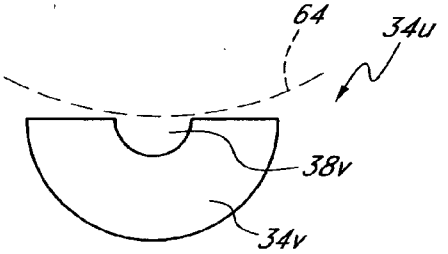

FIG. 36

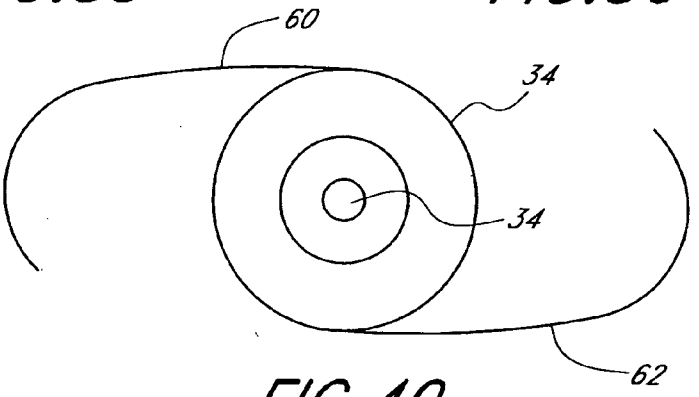

FIG. 40

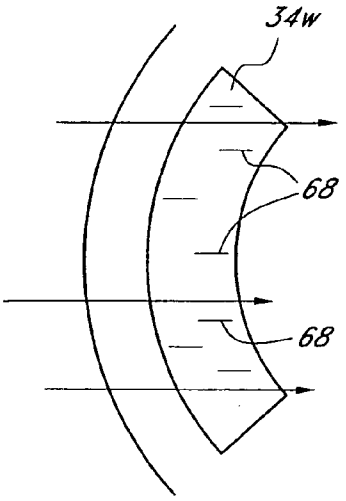

FIG. 37

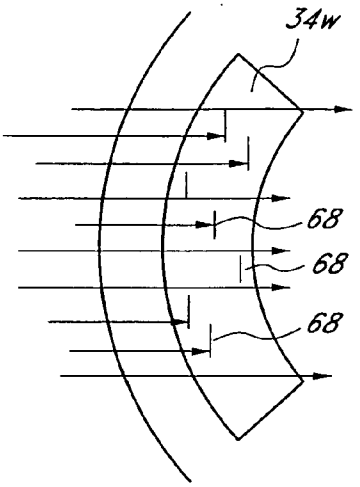

FIG. 38

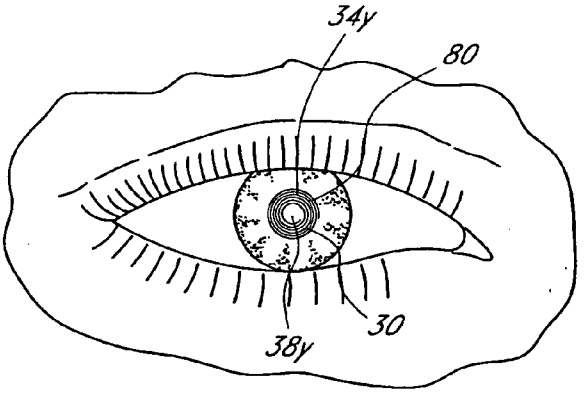

FIG. 41

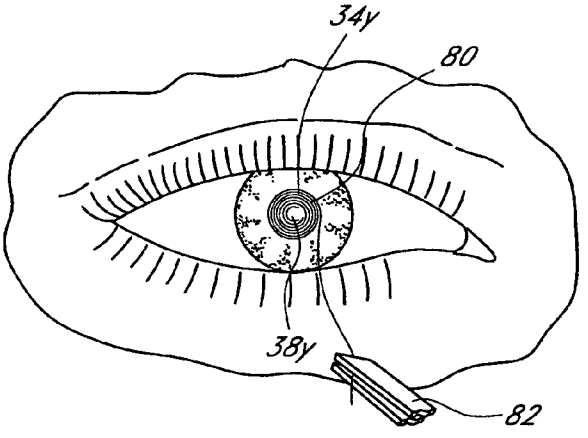

FIG. 42

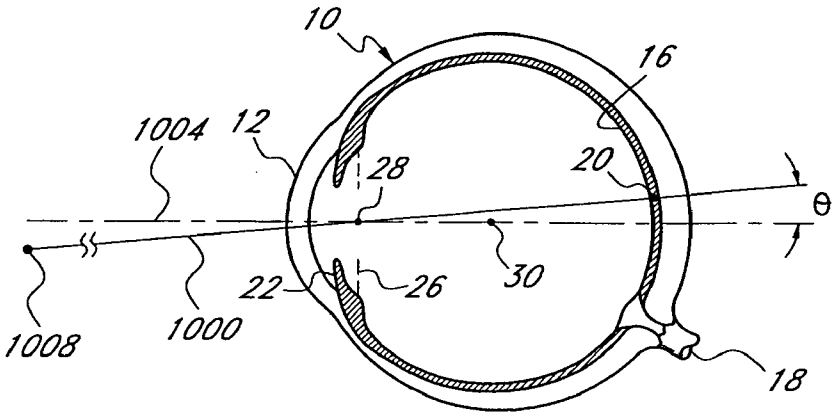

FIG. 43

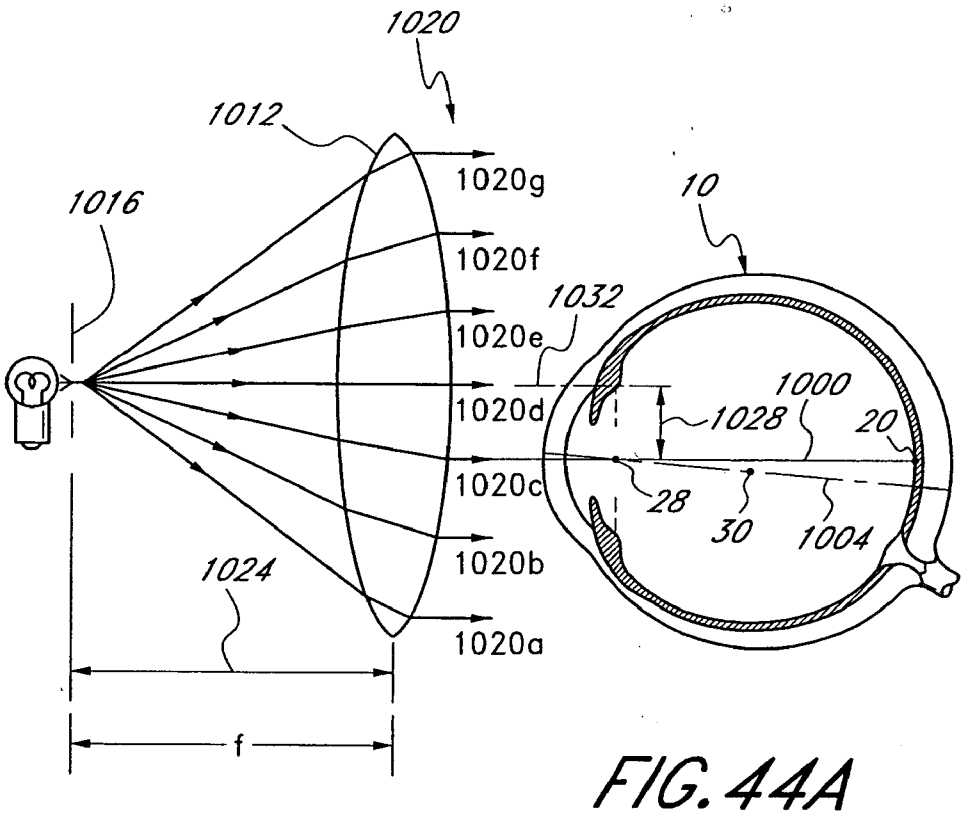

FIG. 44A

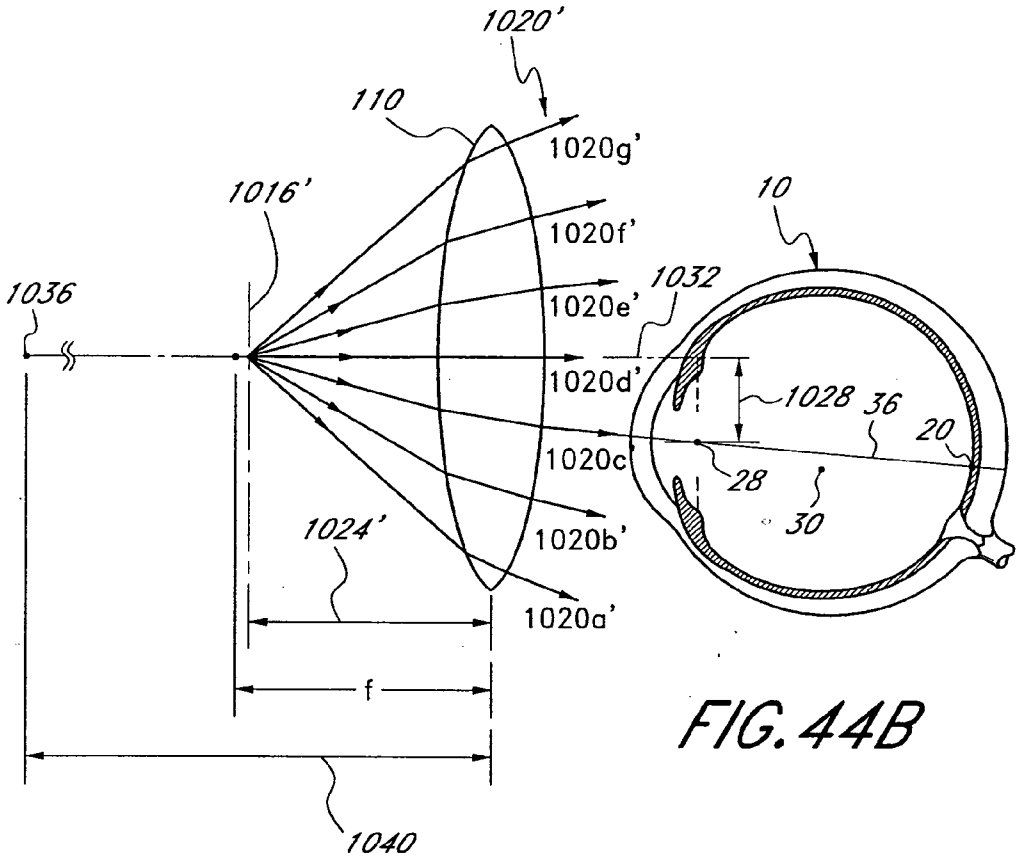
1020'
110
1020g'
1016'
10
1020f'
1036
1032
1020e'
1020d'
1028
36
20
1020c'
28
30
1024'
1020b'
1020a'
f
1040

FIG. 44B

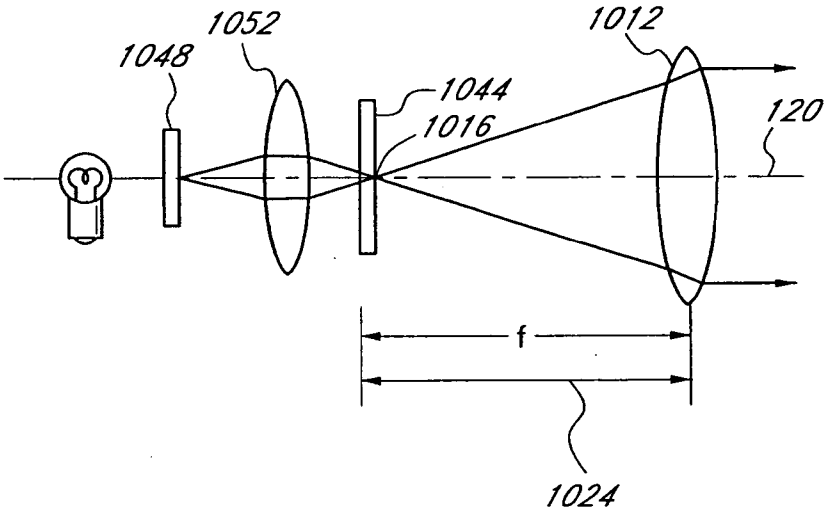

FIG. 45A

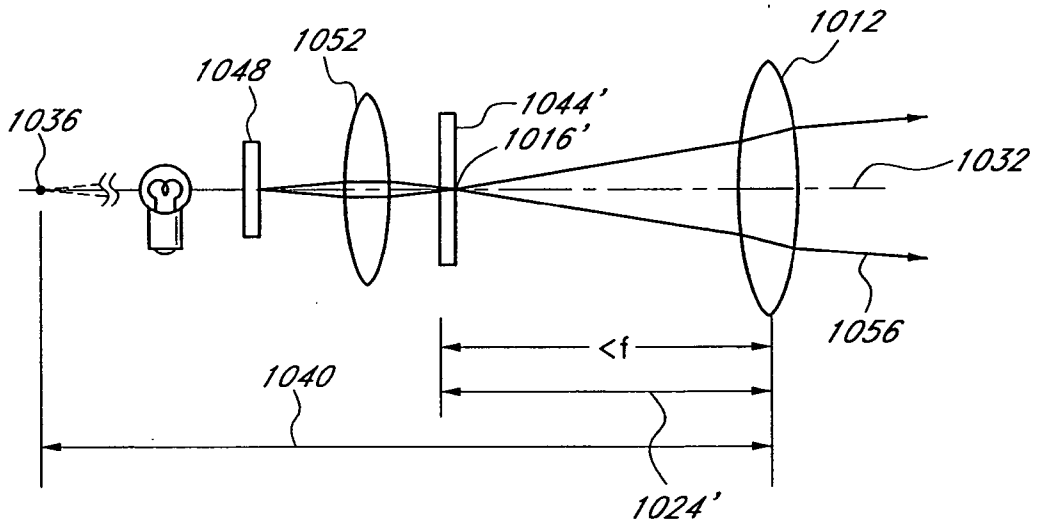

FIG. 45B

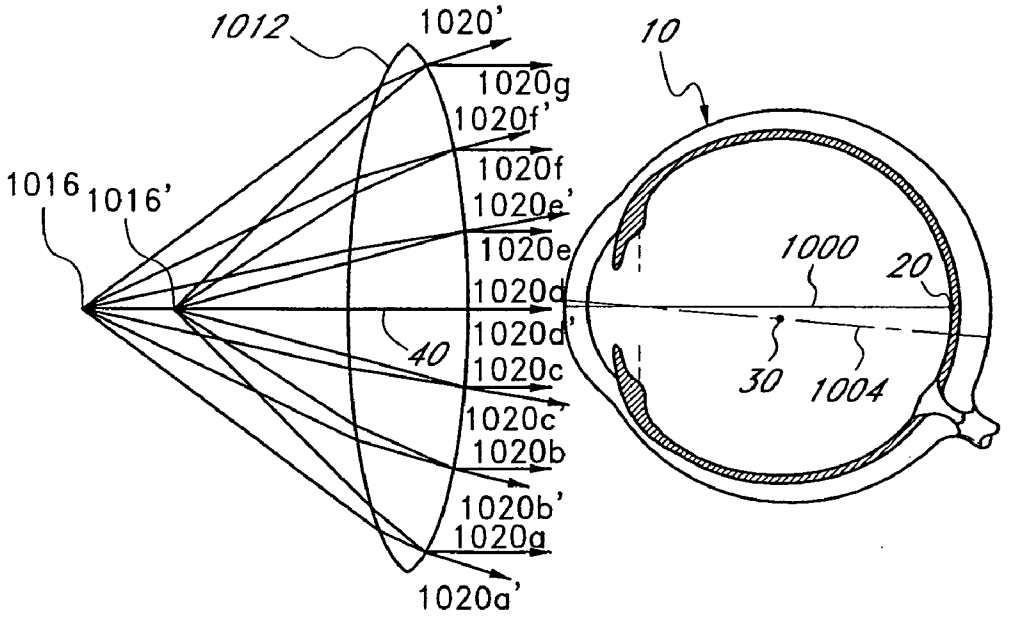
1012
1020'
10
1020g
1020f'
1020f
1020e'
1016
1016'
1020e
1000
20
1020d
1020d'
40
1020c
30
1004
1020c'
1020b
1020b'
1020a
1020a'

FIG. 46

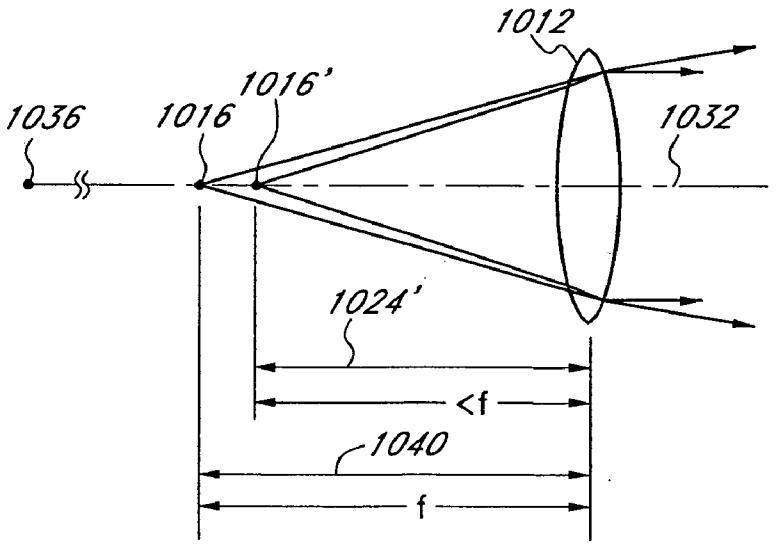
1012
1016'
1036
1016
1032
1024'
<f
1040
f

FIG. 47

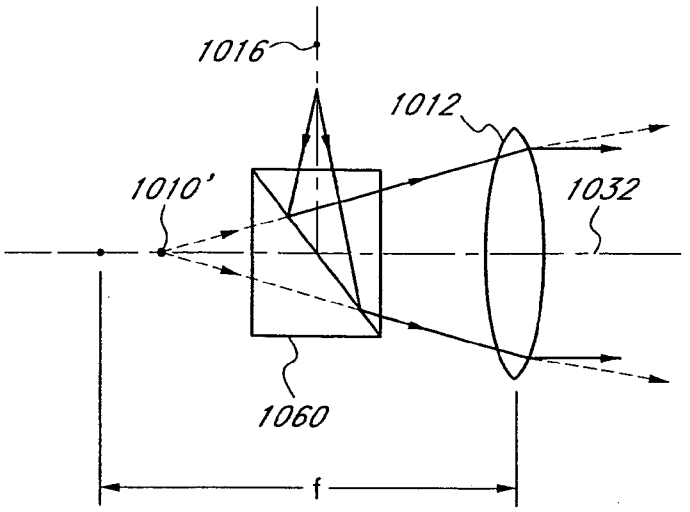

FIG. 48

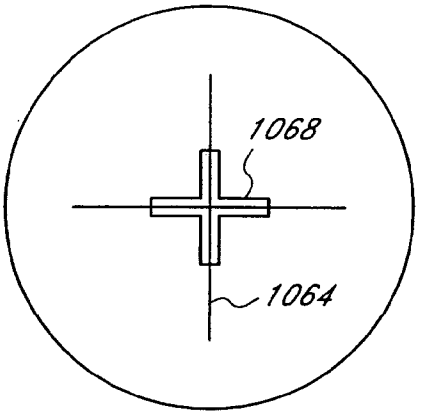

FIG. 49A

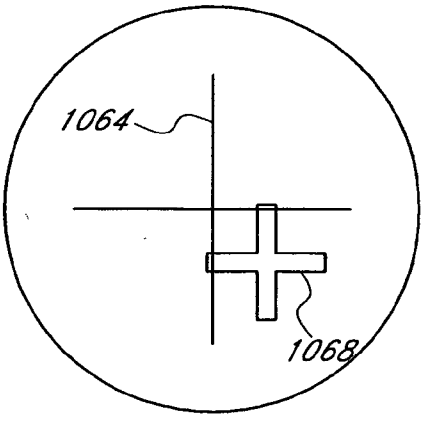

FIG. 49B

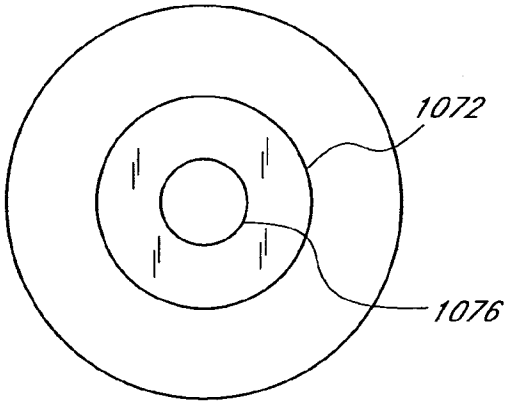

FIG. 50A

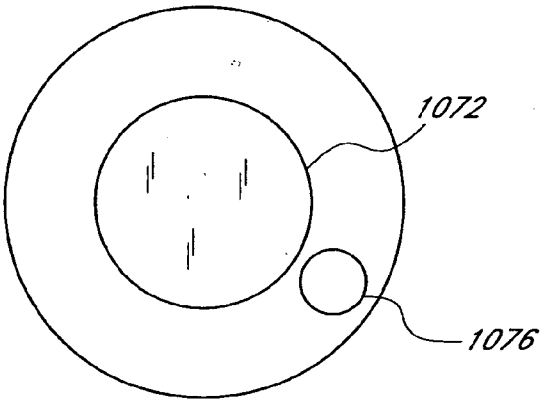

FIG. 50B

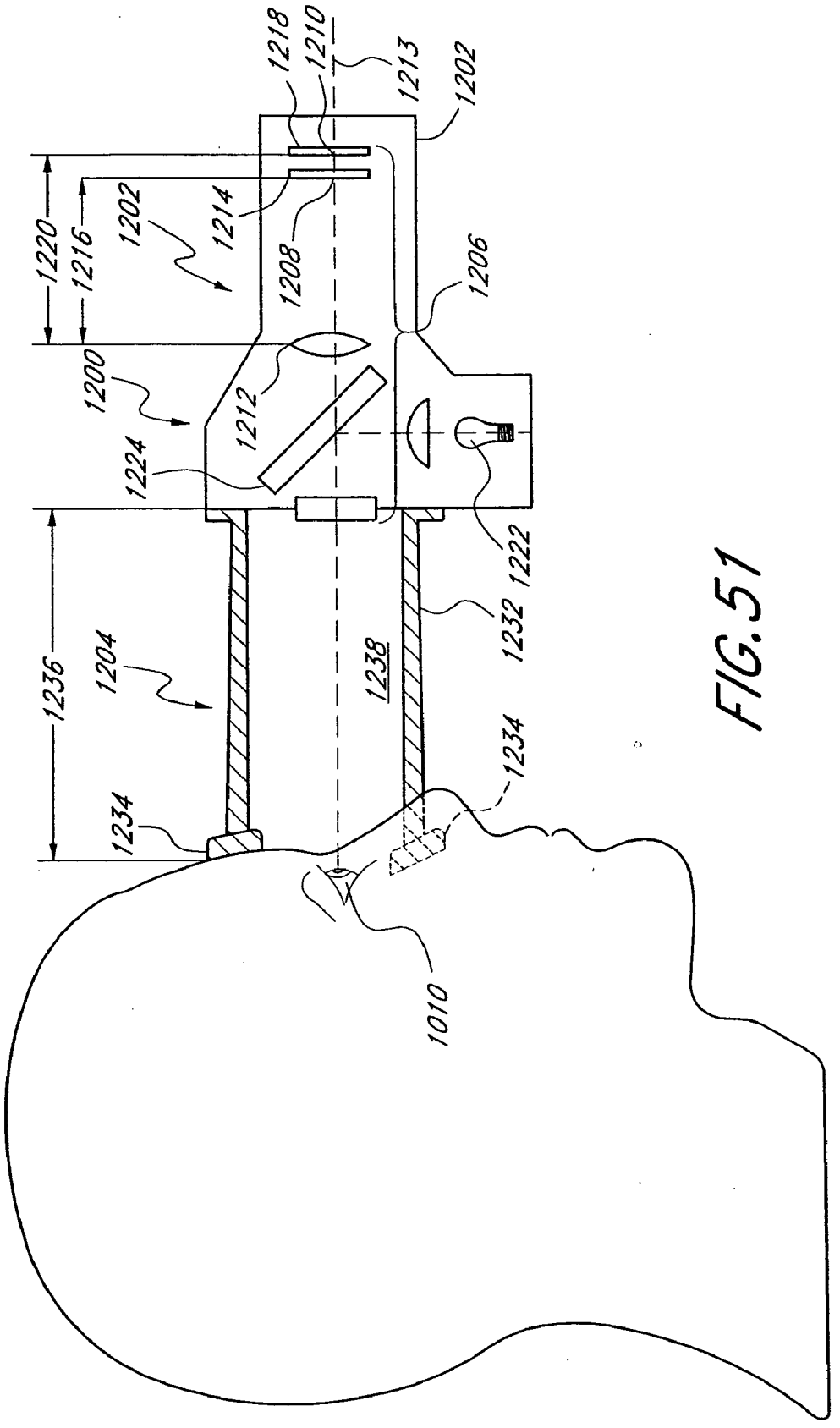
1218
1210
1213
1202
1220
1216
1202
1214
1208
1206
1200
1212
1224
1222
1232
1236
1204
1238
1234
1234
1010

FIG. 51

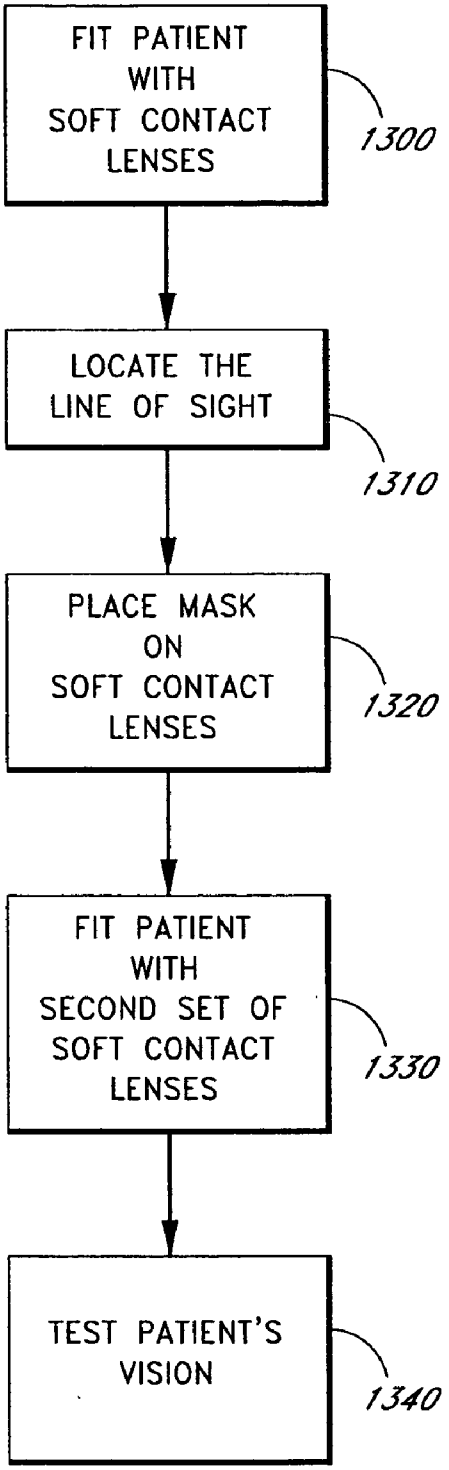
FIT PATIENT WITH SOFT CONTACT LENSES
1300
LOCATE THE LINE OF SIGHT
1310
PLACE MASK ON SOFT CONTACT LENSES
1320
FIT PATIENT WITH SECOND SET OF SOFT CONTACT LENSES
1330
TEST PATIENT'S VISION
1340

FIG. 52

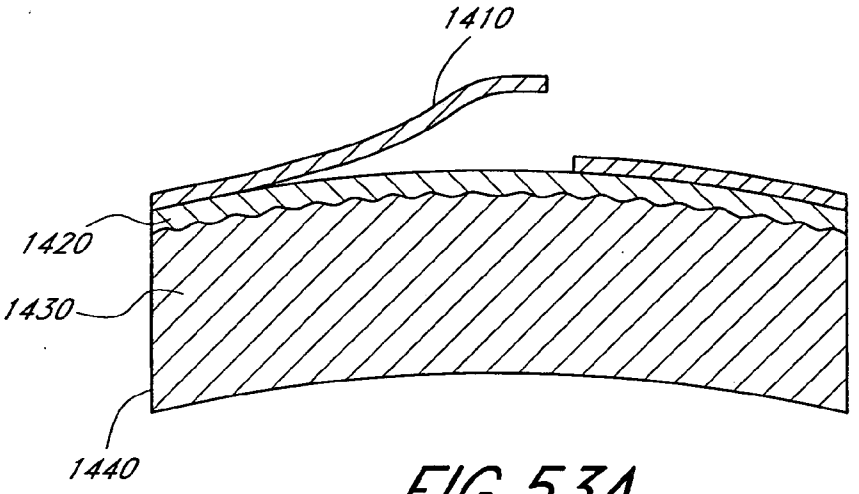

FIG. 53A

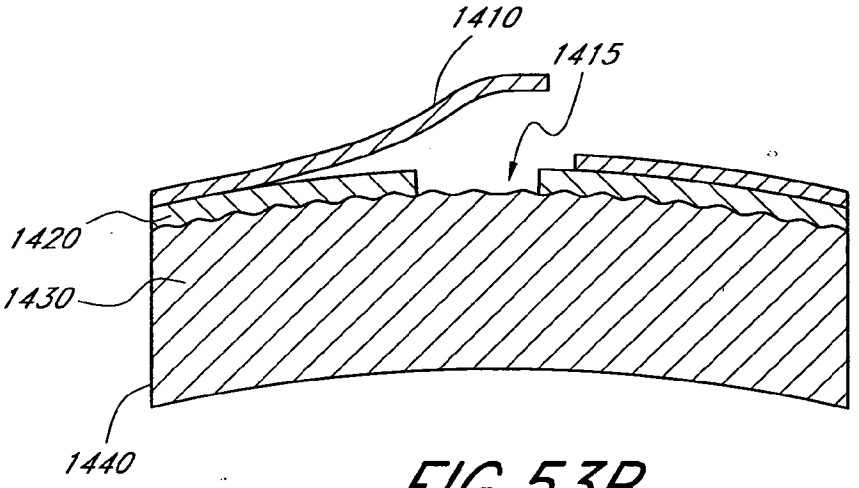

FIG. 53B

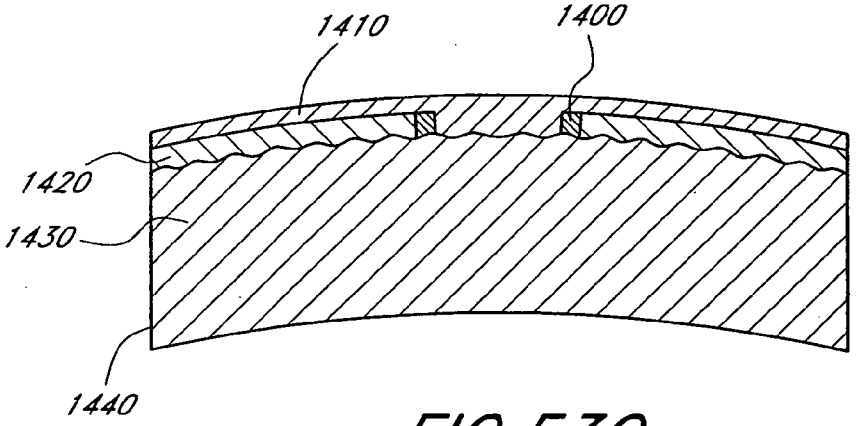

FIG. 53C

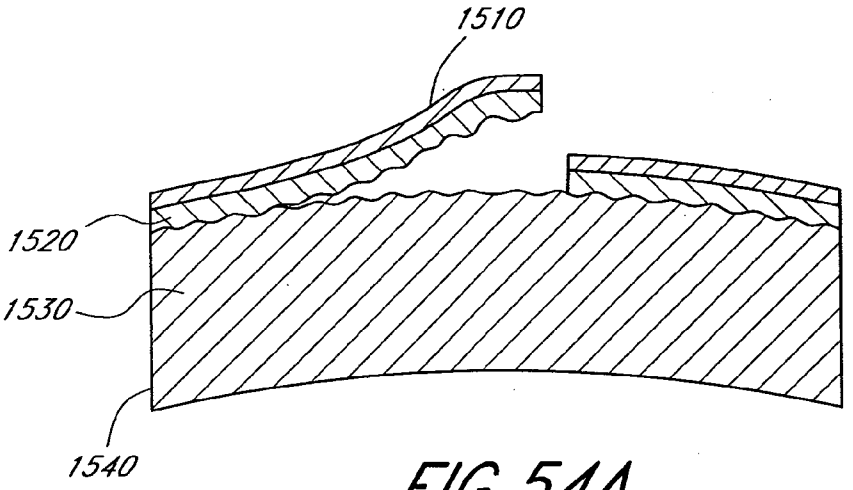

FIG. 54A

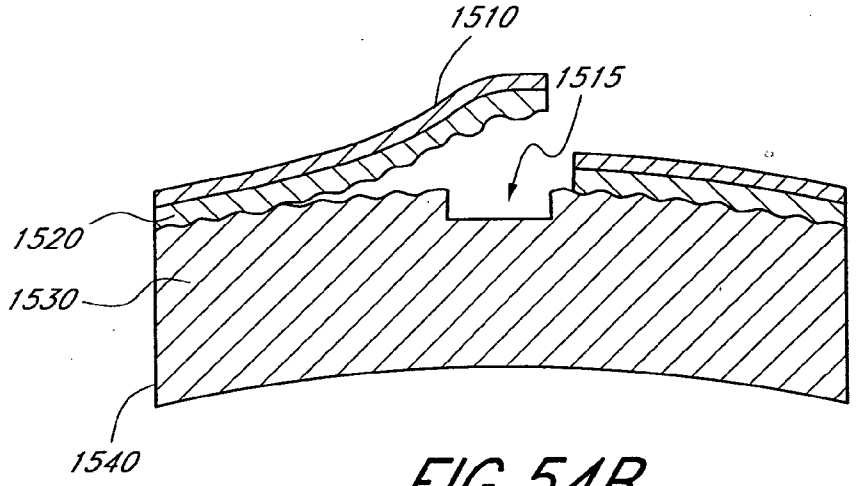

FIG. 54B

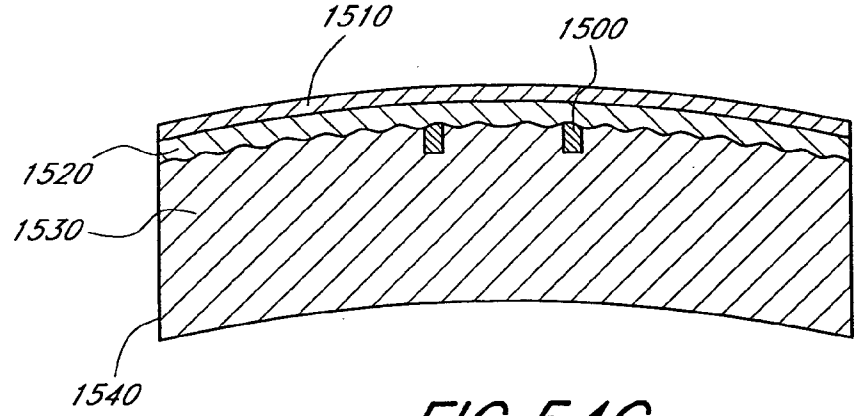

FIG. 54C

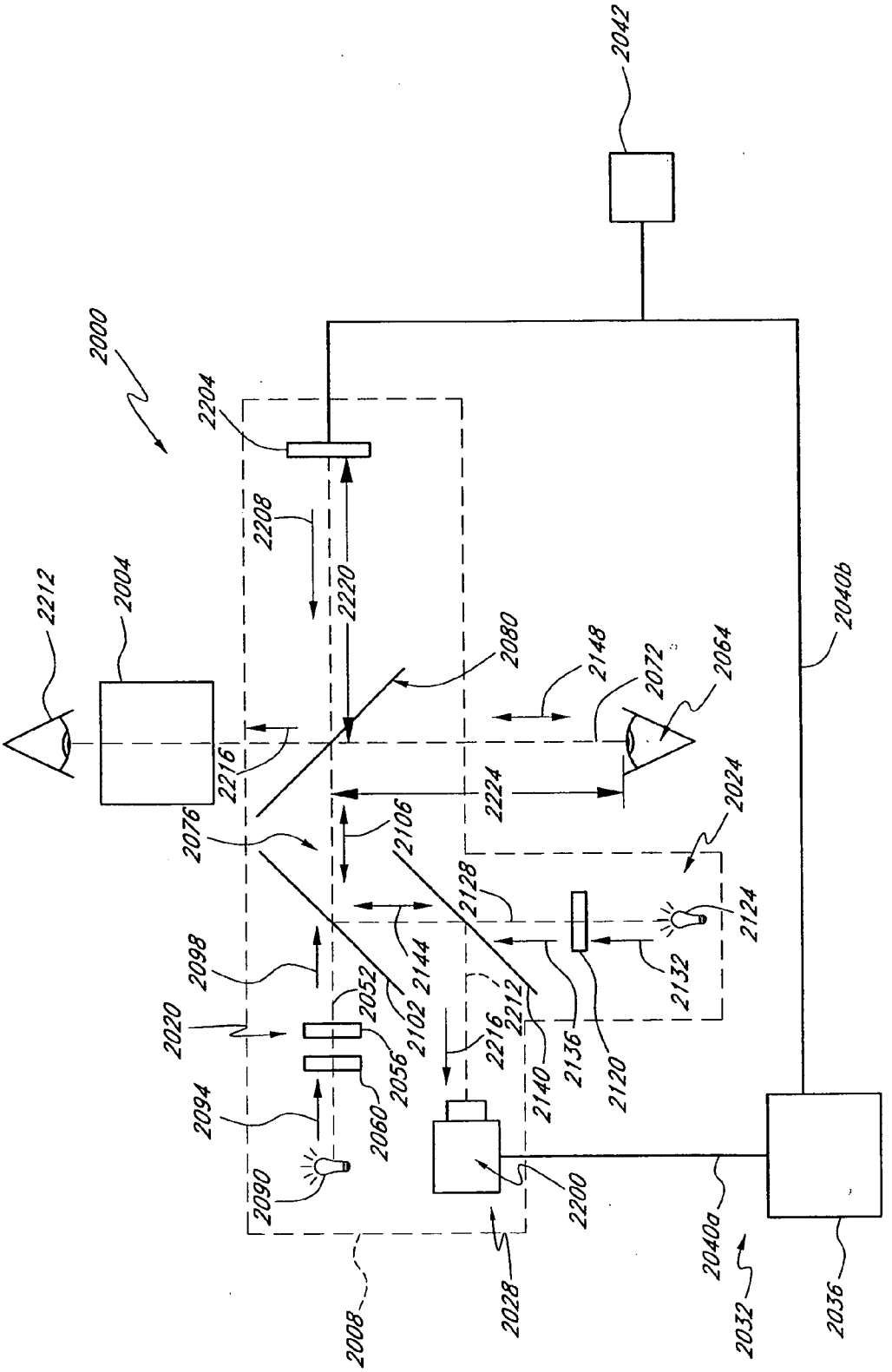
2042
2000
2204
2208
2220
2212
2004
2080
2148
2072
2064
20406
2216
2224
2024
2076
2106
2128
2124
2098
2144
2132
2052
2102
2212
2020
2216
2136
2056
2140
2120
2094
2060
2090
2200
2028
2008
20400
2032
2036

FIG. 55

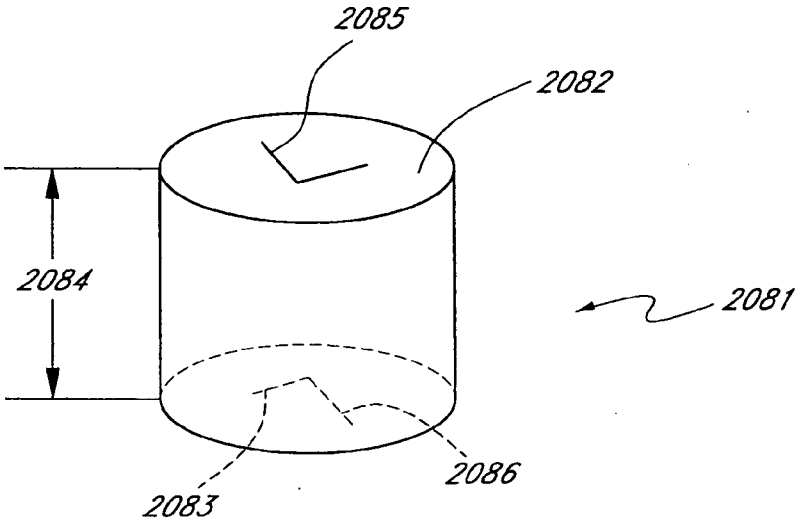

FIG. 55A

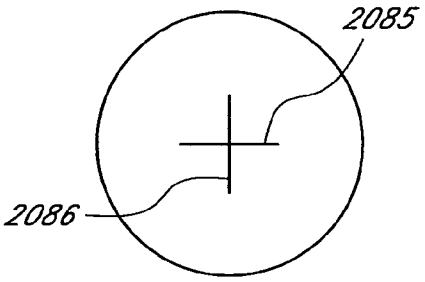

FIG. 55B

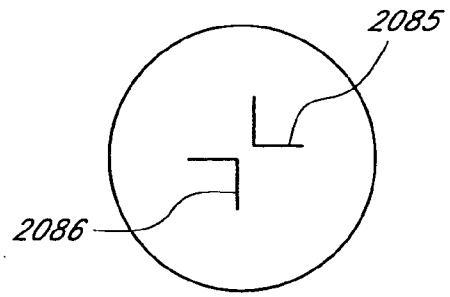

FIG. 55C

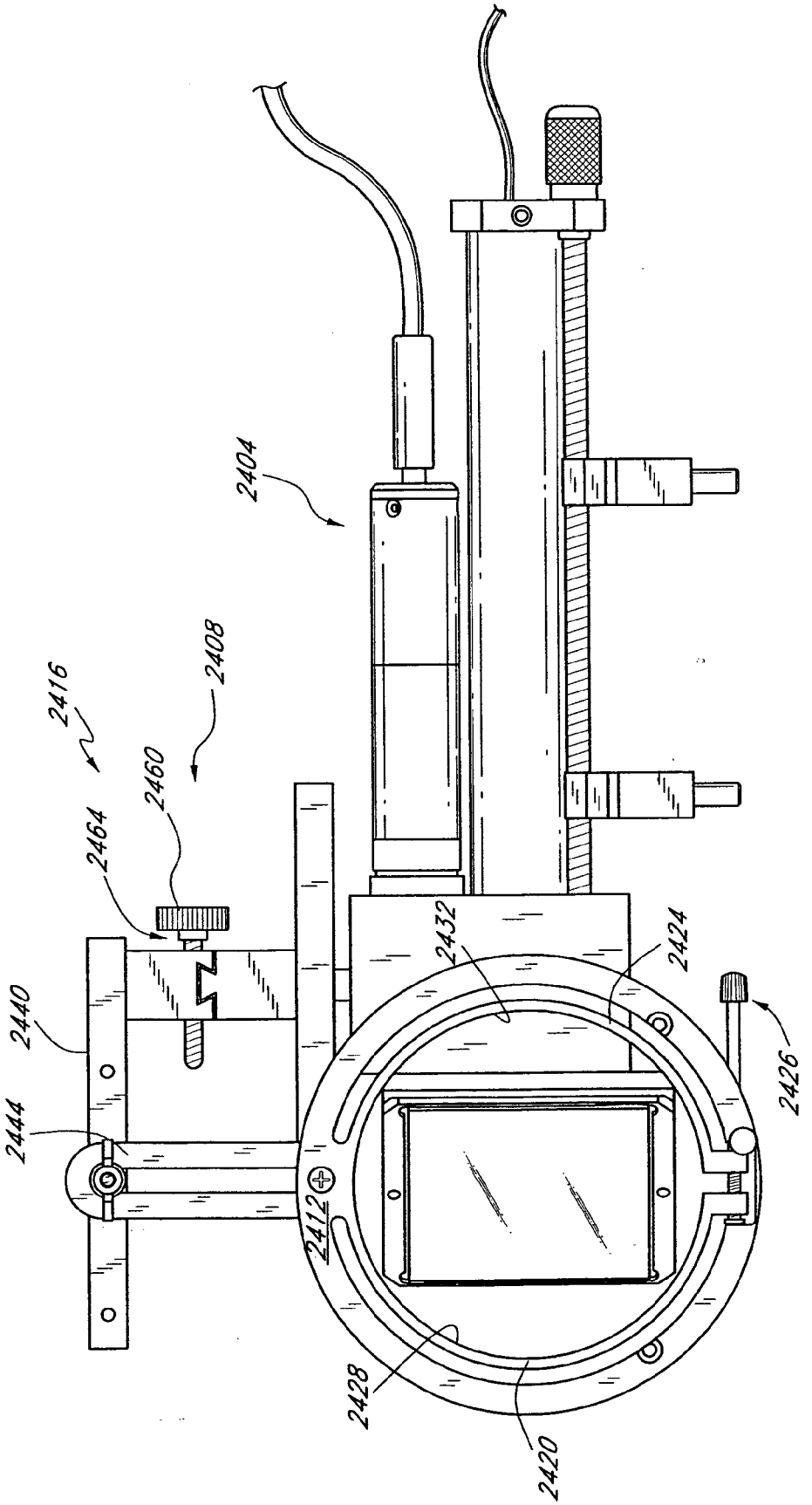
2404
2408
2416
2460
2464
2440
2444
2412
2428
2420
2432
2424
2426

FIG. 56

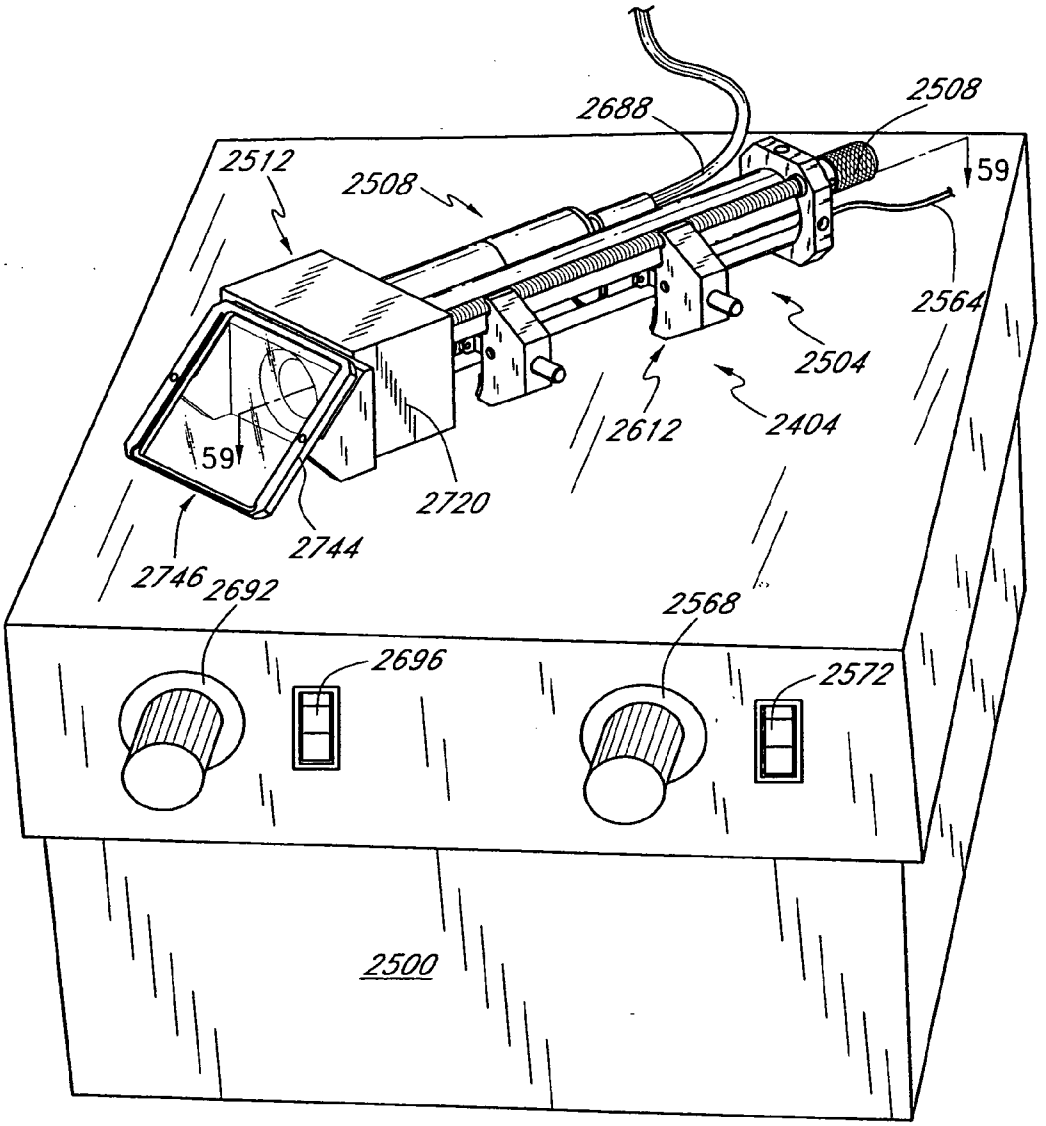
2688
2508
2512
2508
59
2564
2504
2612
2404
59
2720
2744
2746
2692
2568
2696
2572
2500

FIG. 57

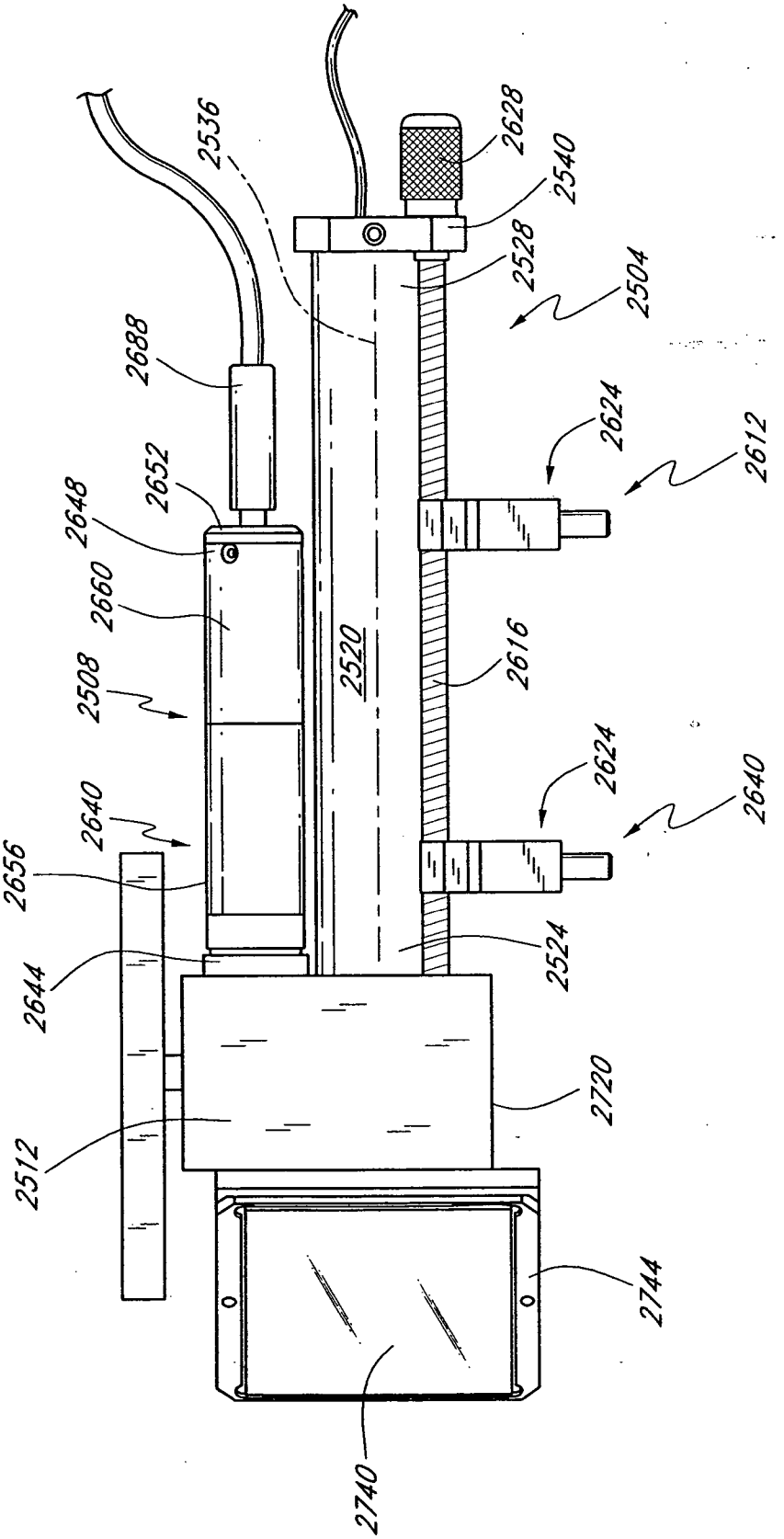
2536
2628
2540
2528
2504
2688
2624
2612
2652
2648
2660
2520
2616
2508
2624
2640
2640
2656
2524
2644
2720
2512
2744
2740

FIG. 58

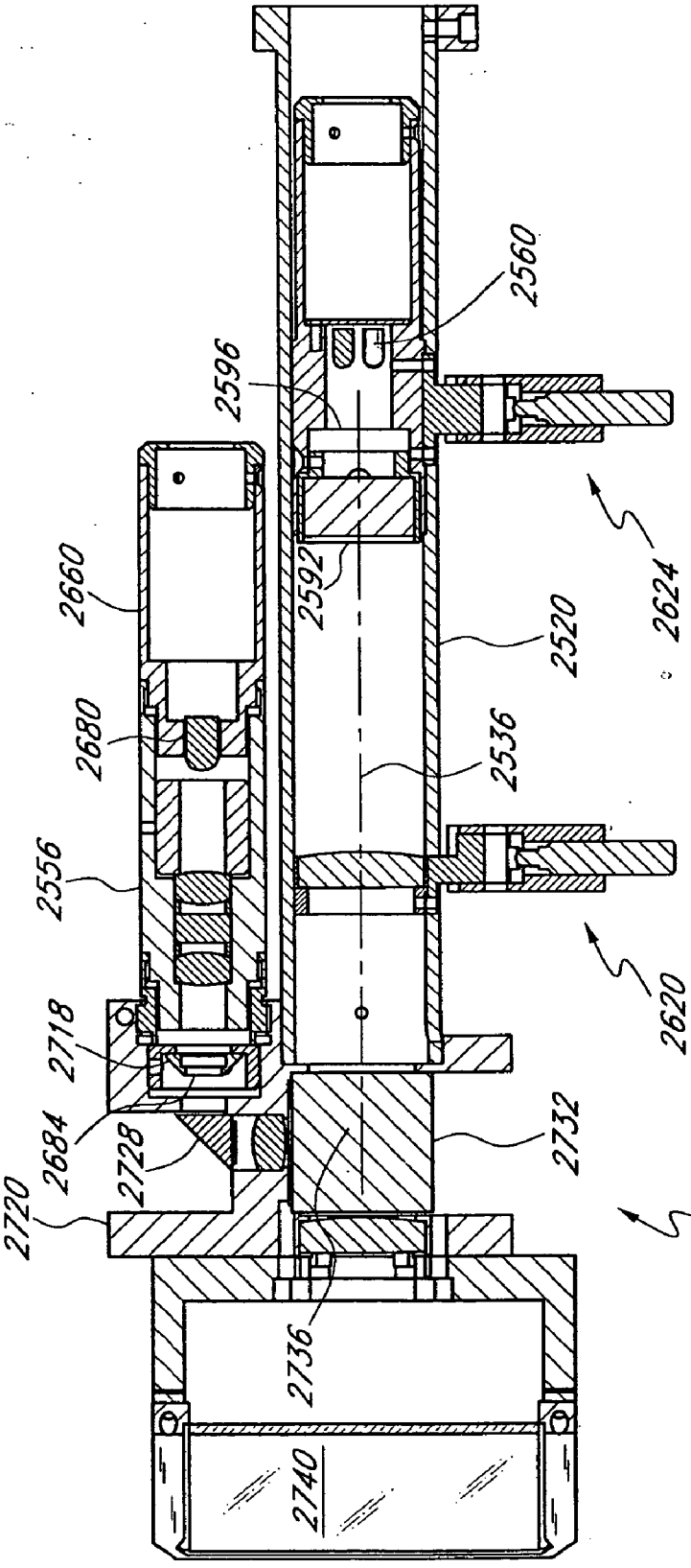
2560
2596
2660
2592
2624
2520
2680
2536
2556
2620
2718
2684
2728
2732
2720
2512
2736
2740

FIG. 59

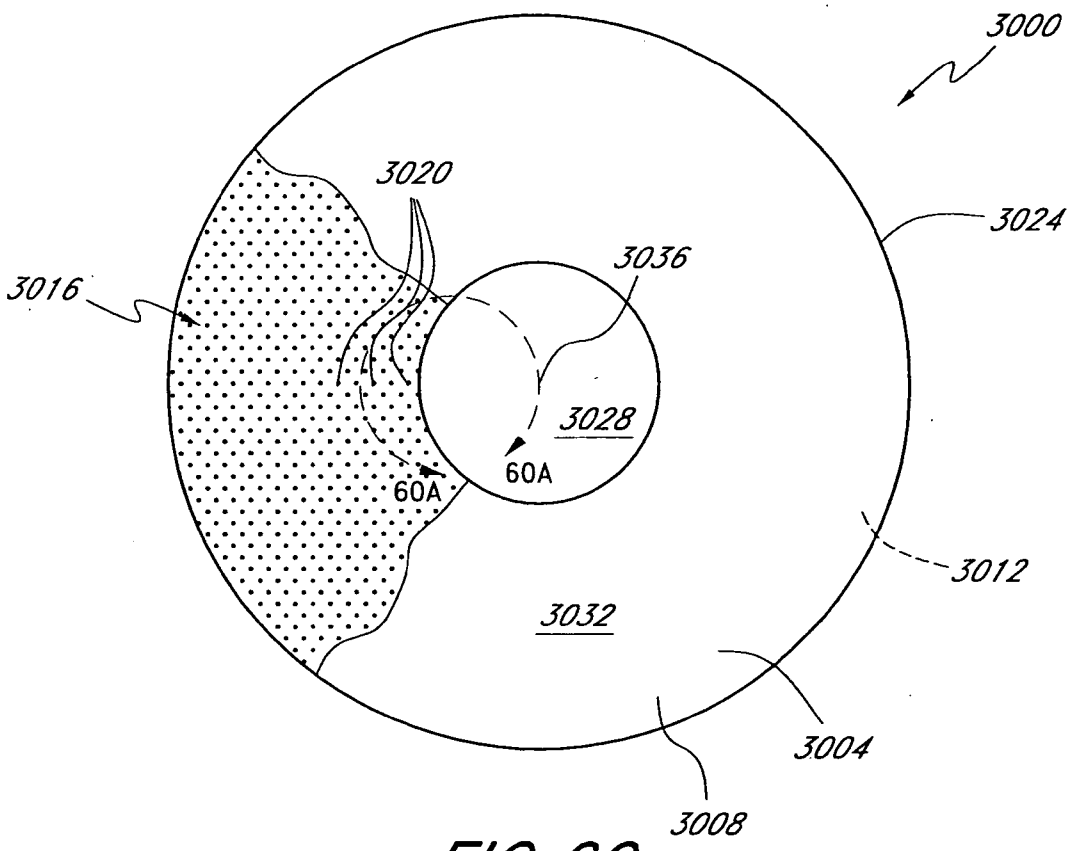

FIG. 60

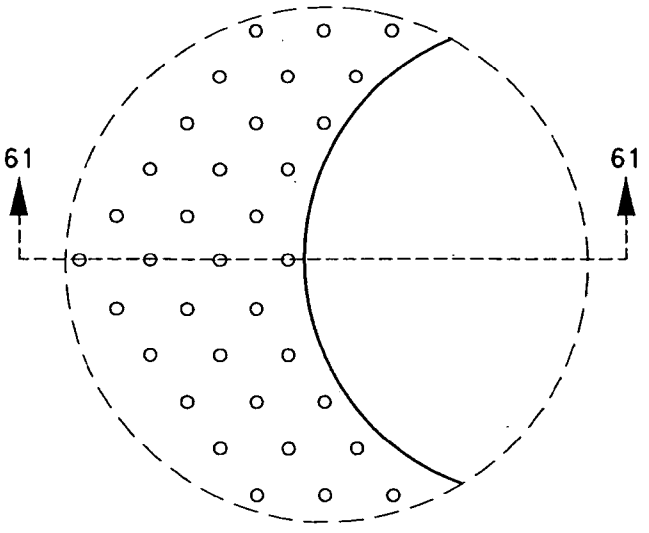

FIG. 60A

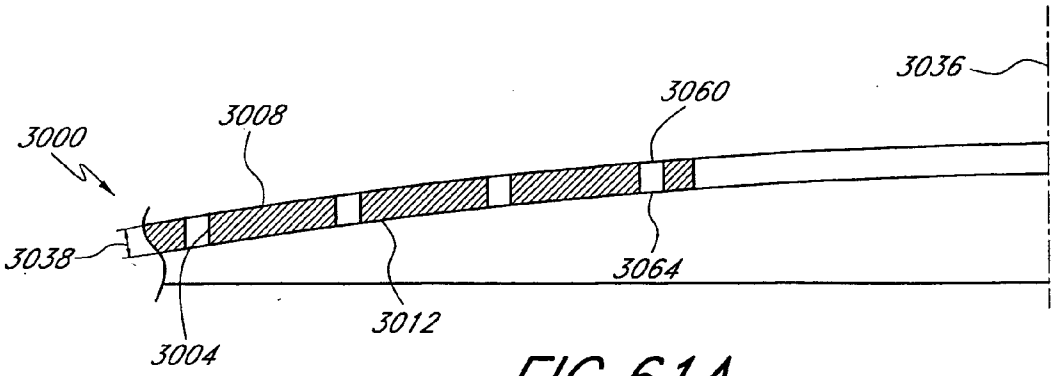

FIG. 61A

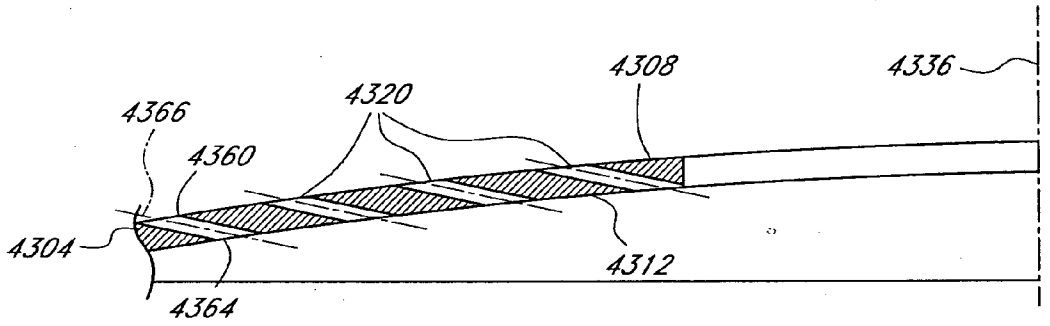

FIG. 61B

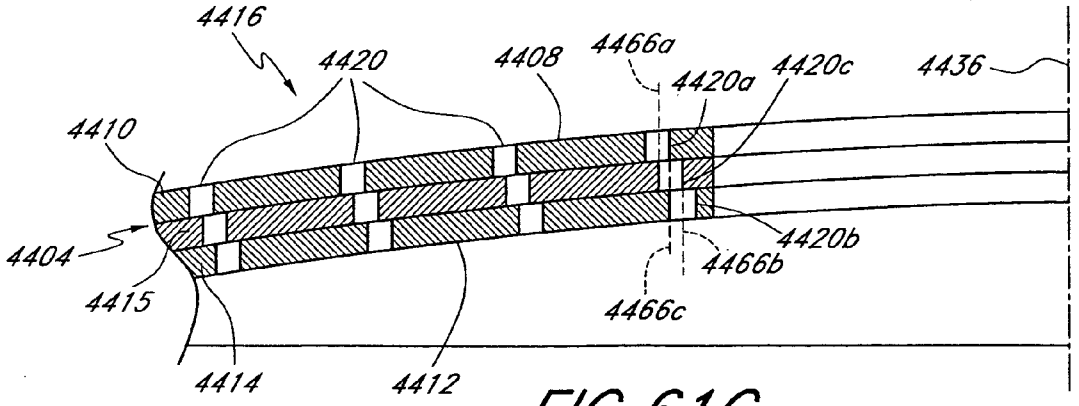

FIG. 61C

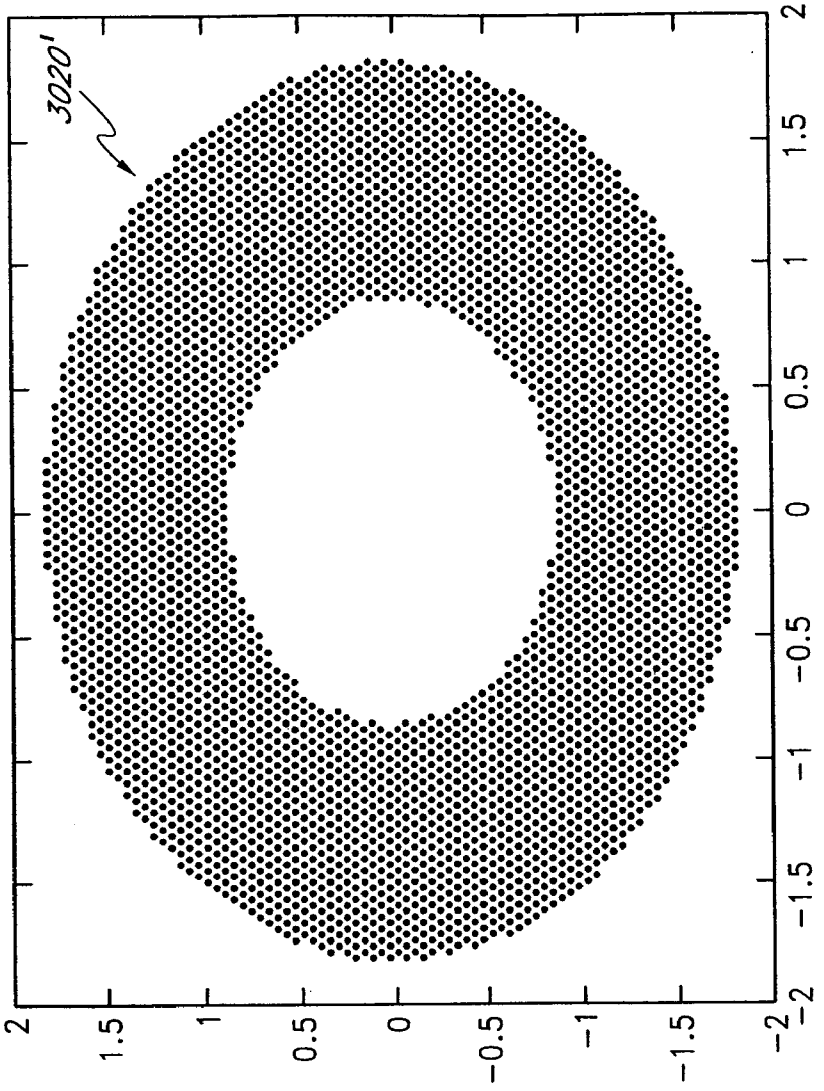

FIG. 62A

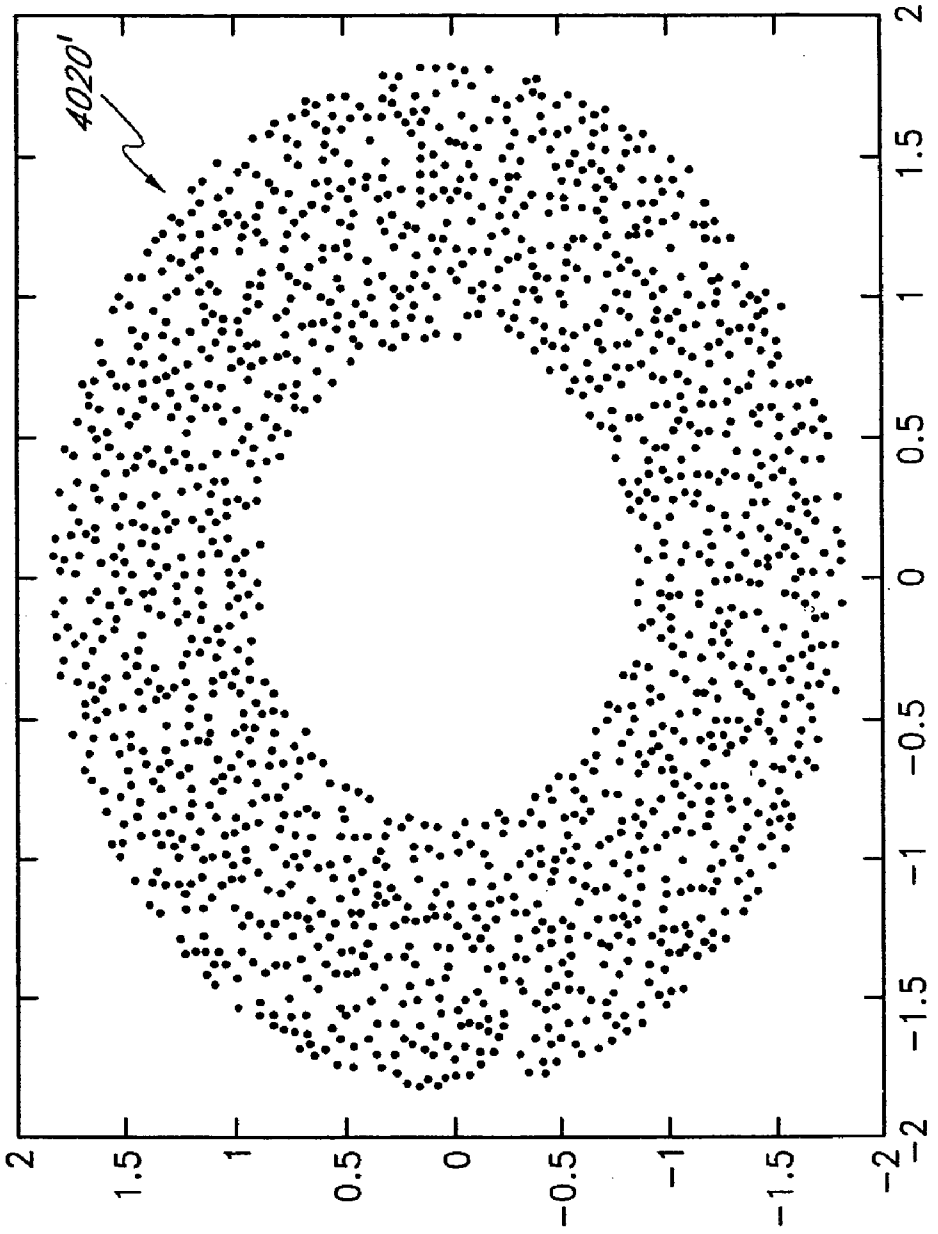

FIG. 62B

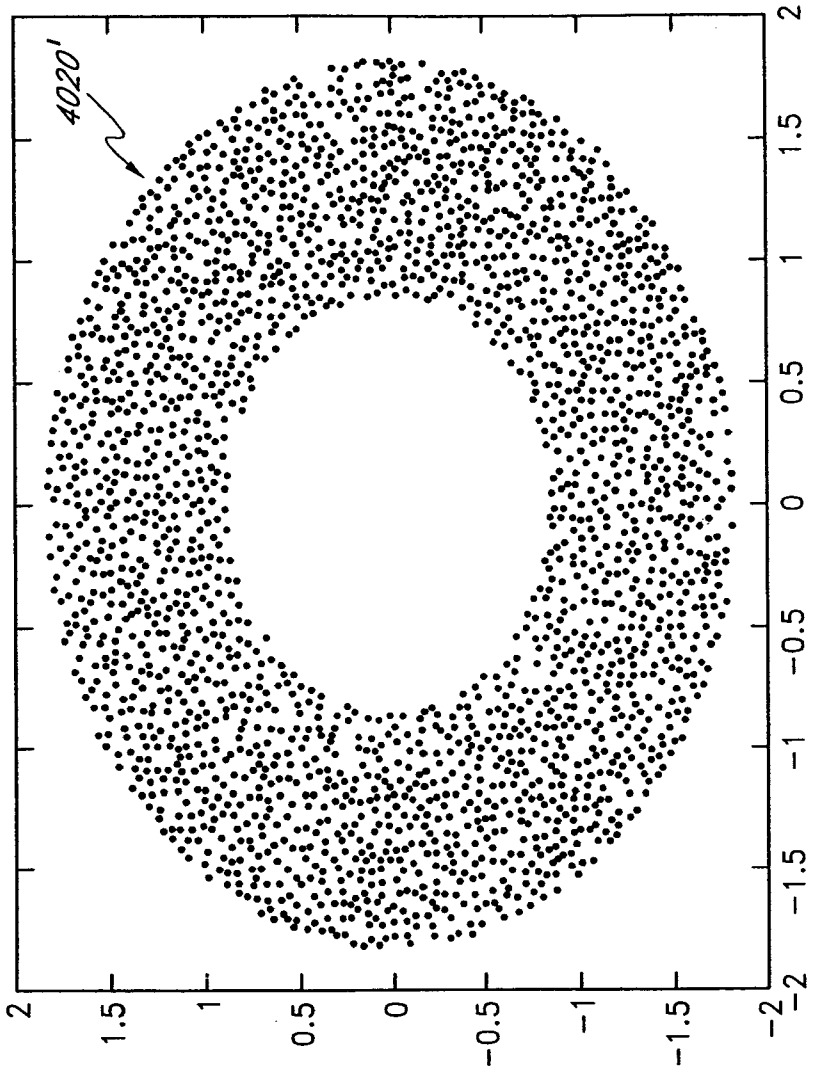

FIG. 62C

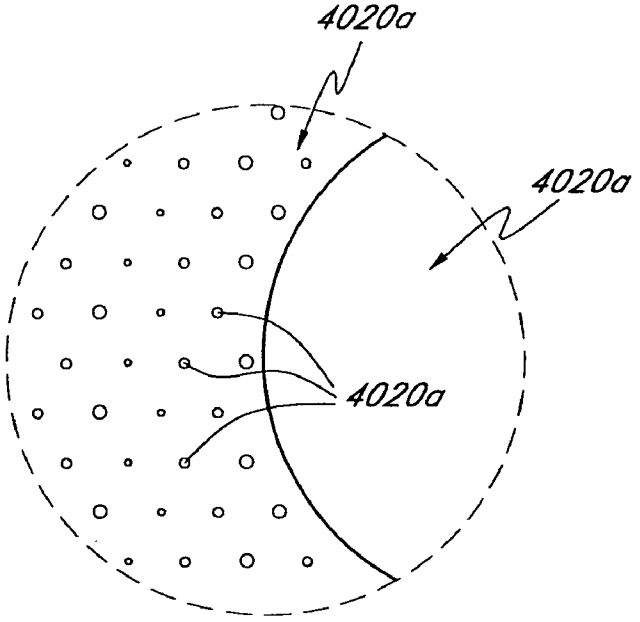

FIG. 63A

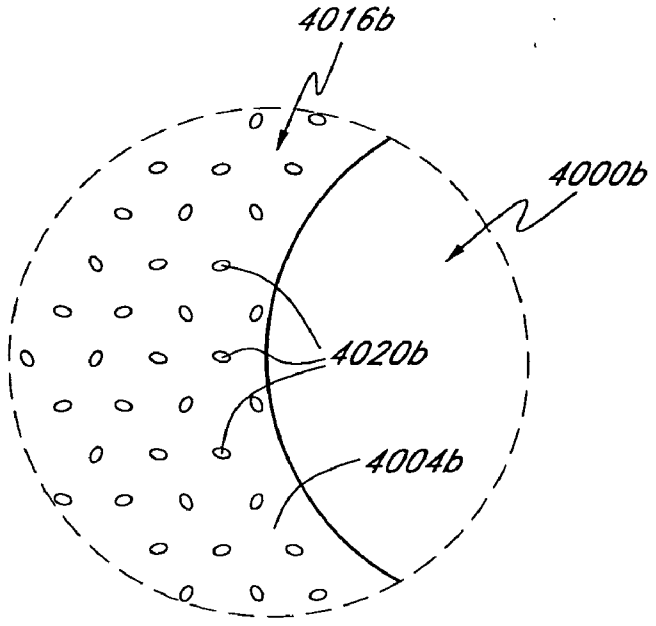

FIG. 63B

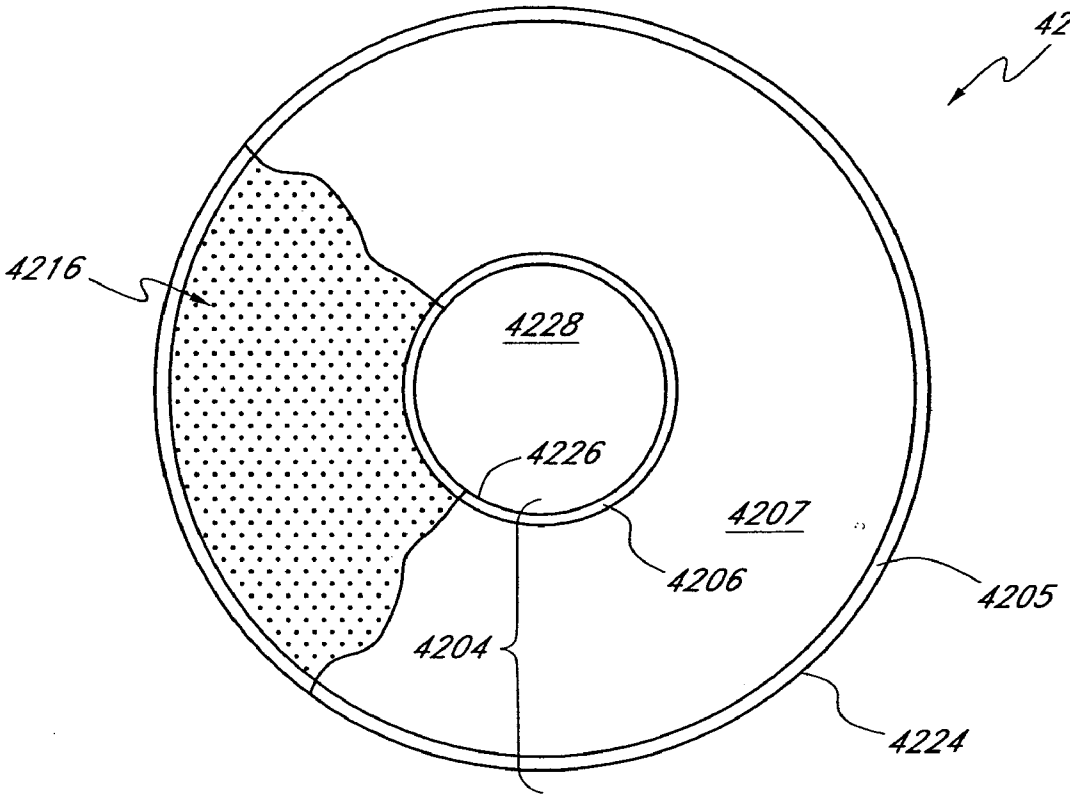

FIG. 64

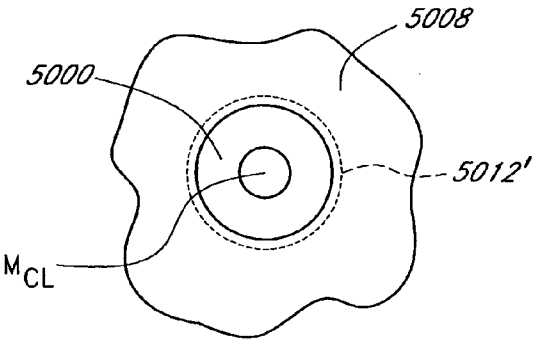

FIG. 65A

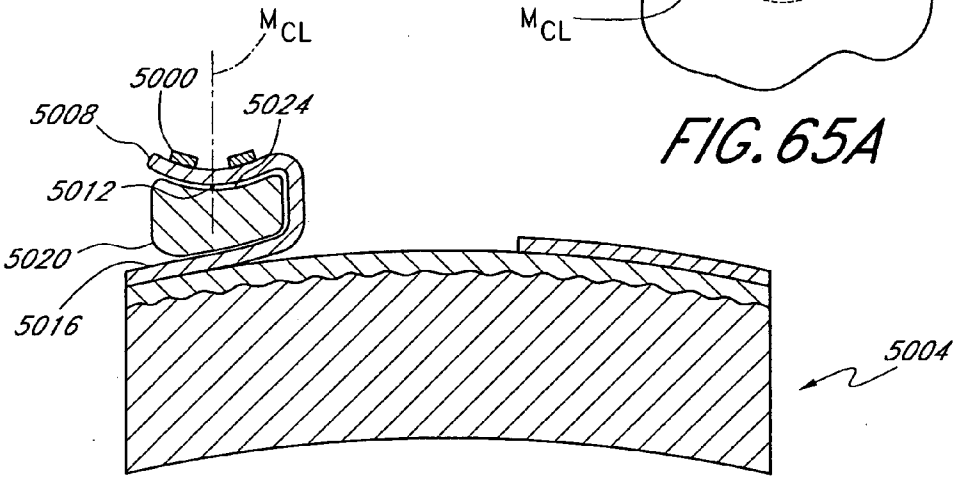

FIG. 65

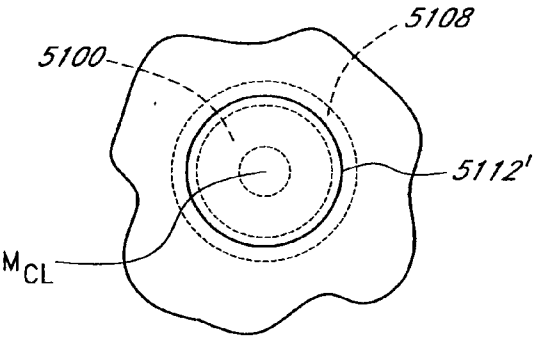

FIG. 66A

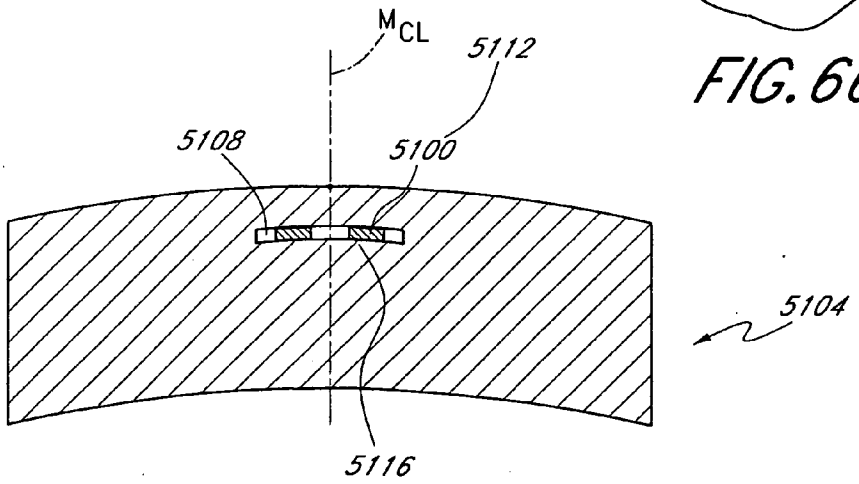

FIG. 66

METHOD AND APPARATUS FOR ALIGNING A MASK WITH THE VISUAL AXIS OF AN EYE

RELATED APPLICATIONS

[0001] This application is a continuation of U.S. application Ser. No. 10/854,032, filed May 26, 2004, which claims priority under 35 U.S.C. §119(e) to U.S. Provisional Application No. 60/479,129, filed on Jun. 17, 2003, the entirety of which is hereby incorporated by reference.

BACKGROUND OF THE INVENTION

[0002] 1. Field of the Invention

[0003] This application is directed to masks for improving the depth of focus of an eye of a human patient and methods and apparatuses for applying such masks. More particularly, this application is directed to apparatuses and methods for aligning a mask with the line of sight of an eye and applying the mask to the eye.

[0004] 2. Description of the Related Art

[0005] Presbyopia, or the inability to clearly see objects up close is a common condition that afflicts many adults over the age of 40. Presbyopia diminishes the ability to see or read up close. Near objects appear blurry and out of focus. Presbyopia may be caused by defects in the focusing elements of the eye or the inability (due to aging) of the ciliary muscles to contract and relax and thereby control the shape of the lens in the eye.

[0006] The human eye functions by receiving light rays from an object and bending, refracting, and focusing those rays. The primary focusing elements of the human eye are the lens (also referred to as the intraocular lens) and the cornea. Light rays from an object are bent by the cornea, which is located in the anterior part of the eye. The light rays subsequently pass through the intraocular lens and are focused thereby onto the retina, which is the primary light receiving element of the eye. From the retina, the light rays are converted to electrical impulses, which are then transmitted by the optic nerves to the brain.

[0007] Ideally, the cornea and lens bend and focus the light rays in such a way that they converge at a single point on the retina. Convergence of the light rays on the retina produces a focused image. However, if the cornea or the lens are not functioning properly, or are irregularly shaped, the images may not converge at a single point on the retina. Similarly, the image may not converge at a single point on the retina if the muscles in the eye can no longer adequately control the lens. This condition is sometimes described as loss of accommodation. In presbyopic patients, for example, the light rays often converge at a point behind the retina. To the patient, the resulting image is out of focus and appears blurry.

[0008] Traditionally, vision improvement has been achieved by prescribing eye glasses or contact lenses to the patient. Eye glasses and contact lenses are shaped and curved to help bend light rays and improve focusing of the light rays onto the retina of the patient. However, some vision deficiencies, such as presbyopia, are not adequately addressed by these approaches.

SUMMARY OF THE INVENTION

[0009] In one embodiment, a method is provided for increasing the depth of focus of an eye of a patient. The eye has a visual axis. The visual axis of the eye is aligned with an instrument axis of an ophthalmic instrument. The ophthalmic instrument has an aperture through which the patient may look along the instrument axis. A first reference target is imaged on the instrument axis at a first distance with respect to the eye. A second reference target is imaged on the instrument axis at a second distance with respect to the eye. The second distance is greater than the first distance. Movement is provided such that the patient's eye is in a position where the images of the first and second reference targets appear to the patient's eye to be aligned. A mask comprising a pin-hole aperture having a mask axis is aligned with the instrument axis such that the mask axis and the instrument axis are substantially collinear. The mask is applied to the eye of the patient while the alignment of the mask and the instrument axis is maintained.

[0010] In another embodiment, a method for increasing the depth of focus of an eye of a patient is provided. The eye includes a visual axis and a cornea that has an epithelial sheet, a Bowman's membrane, and a stroma. The visual axis of the eye is located using more than one reference target. A mask that includes a pin-hole aperture having a mask axis is aligned with the visual axis of the eye. The mask is applied to the eye while maintaining the alignment of the mask axis and the visual axis.

[0011] In another embodiment, a method for correcting vision is provided. A LASIK procedure is performed. The eye is moved until at least two reference targets are aligned. A mask is applied to the eye.

[0012] In another embodiment, an apparatus for aligning a mask with a visual axis of an eye of a patient includes an optics housing, a first target, a second target, a lens, and a light source. The optics housing defines an aperture at a first location into which the eye may be directed and an instrument axis. The first target is coupled with the optics housing and is positioned on the instrument axis at a first distance relative to the first location. The second target is coupled with the optics housing and is positioned on the instrument axis at a second distance relative to the first location. The lens is coupled with the optics housing. The second distance is equal to the focal length of the lens. The light source is off-set from the instrument axis and is configured to indicate the location of the visual axis of the eye.

[0013] In another embodiment, an apparatus for aligning a mask with a visual axis of an eye of a patient includes a fixture for locating the eye at a first location. The apparatus for aligning also includes a first target, a second target, and a marker. The first target is positioned on an instrument axis at a first distance relative to the first location. The second target is positioned on the instrument axis at a second distance relative to the first location. The marker is configured to indicate the location of the instrument axis.

[0014] In another embodiment, a method of treating a patient is provided. A reference point on a cornea is identified. The reference point is marked. A corneal flap is lifted to expose an intracorneal surface. An implant is positioned on the intracorneal surface. The flap is closed to cover at least a portion of the implant.

[0015] In another embodiment, a method of treating a patient is provided. A reference point on a cornea is identified. The reference point is marked. A corneal pocket is

created to expose an intracorneal surface. An implant is positioned on the intracorneal surface.

[0016] In another embodiment, a method of treating a patient is provided. A reference point on a cornea is identified. The reference point is marked. A stromal surface is exposed. An implant is positioned on the stromal surface. At least a portion of the implant is covered.

[0017] In one embodiment, a mask configured to be implanted in a cornea of a patient to increase the depth of focus of the patient includes an anterior surface, a posterior surface, and a plurality of holes. The anterior surface is configured to reside adjacent a first corneal layer. The posterior surface is configured to reside adjacent a second corneal layer. The plurality of holes extends at least partially between the anterior surface and the posterior surface. The plurality of holes is configured to substantially eliminate visible diffraction patterns.

[0018] In another embodiment, a mask configured to be implanted in a cornea of a patient to increase the depth of focus of the patient is provided. The mask includes a body that has an anterior surface configured to reside adjacent a first corneal layer and a posterior surface configured to reside adjacent a second corneal layer. The body is formed of a substantially opaque material that has a relatively high water content. The body is capable of substantially maintaining natural nutrient flow from the first corneal layer to the second corneal layer. The body being is configured to substantially eliminate diffraction patterns that are visible to the patient.

[0019] In another embodiment, a method of making a mask is provided. A body is configured to have an anterior surface capable of residing adjacent a first layer of a cornea of a patient and a posterior surface capable of residing adjacent a second layer of the cornea. A peripheral portion of the body is configured to be substantially opaque to incident light. A central portion of the body is configured to be transparent along an optic axis to substantially all of the incident light. The body is configured with a transport structure capable of substantially maintaining natural nutrient flow from the first layer to the second layer without producing visible diffraction patterns.

[0020] In another embodiment, a method of making a mask is provided. A body that has an anterior surface, a posterior surface, an outer periphery, and an inner periphery is provided. The anterior surface is configured to reside adjacent a first layer of a cornea of a patient. The posterior surface is configured to reside adjacent a second layer of the cornea. A plurality of non-uniform locations for forming a plurality of holes between the anterior surface and the posterior surface is generated. A subset of locations among the plurality of locations is modified to maintain a performance characteristic of the mask. A hole is formed in the body at locations corresponding to the subset of locations. The holes are configured to substantially maintain natural nutrient flow from the first layer to the second layer without producing visible diffraction patterns.

BRIEF DESCRIPTION OF THE DRAWINGS

[0021] **FIG. 1** is a plan view of the human eye.

[0022] **FIG. 2** is a cross-sectional side view of the human eye.

[0023] **FIG. 3** is a cross-sectional side view of the human eye of a presbyopic patient wherein the light rays converge at a point behind the retina of the eye.

[0024] **FIG. 4** is a cross-sectional side view of a presbyopic eye implanted with one embodiment of a mask wherein the light rays converge at a point on the retina.

[0025] **FIG. 5** is a plan view of the human eye with a mask applied thereto.

[0026] **FIG. 6** is a perspective view of one embodiment of a mask.

[0027] **FIG. 7** is a plan frontal view of an embodiment of a mask with a hexagon-shaped pinhole like aperture.

[0028] **FIG. 8** is a plan frontal view of an embodiment of a mask with an octagon-shaped pinhole like aperture.

[0029] **FIG. 9** is a frontal plan view of an embodiment of a mask with an oval-shaped pinhole like aperture.

[0030] **FIG. 10** is a frontal plan view of an embodiment of a mask with a pointed oval-shaped pinhole like aperture.

[0031] **FIG. 11** is a frontal plan view of an embodiment of a mask with a star-shaped pinhole like aperture.

[0032] **FIG. 12** is a frontal plan view of an embodiment of a mask with a teardrop-shaped pinhole like aperture spaced above the true center of the mask.

[0033] **FIG. 13** is a frontal plan view of an embodiment of a mask with a teardrop-shaped pinhole like aperture centered within the mask.

[0034] **FIG. 14** is a frontal plan view of an embodiment of a mask with a teardrop-shaped pinhole like aperture spaced below the true center of the mask.

[0035] **FIG. 15** is a frontal plan view of an embodiment of a mask embodying with a square-shaped pinhole like aperture.

[0036] **FIG. 16** is a frontal plan view of an embodiment of a mask with a kidney-shaped oval pinhole like aperture.

[0037] **FIG. 17** is a side view of an embodiment of a convex mask.

[0038] **FIG. 18** is a side view of an embodiment of a concave mask.

[0039] **FIG. 19** is a side view of an embodiment of a mask with a gel to provide opacity to the lens.

[0040] **FIG. 20** is frontal plan view of an embodiment of a mask with a weave of polymeric fibers.

[0041] **FIG. 21** is a side view of the mask of **FIG. 20**.

[0042] **FIG. 22** is a front plan view of an embodiment of a mask having regions of varying opacity.

[0043] **FIG. 23** is a side view of the mask of **FIG. 22**.

[0044] **FIG. 24** is a frontal plan view of an embodiment of a mask that includes a centrally located pinhole like aperture and radially extending slots emanating from the center to the periphery of the mask.

[0045] **FIG. 25** is a side view of the mask of **FIG. 24**.

[0046] **FIG. 26** is a frontal plan view of an embodiment of a mask that includes a central pinhole like aperture, sur-

rounded by a plurality of holes radially spaced from the pinhole like aperture and slots extending radially spaced from the holes and extending to the periphery of the mask.

[0047] **FIG. 27** is a side view of the mask of **FIG. 26**.

[0048] **FIG. 28** is a frontal plan view of an embodiment of a mask that includes a central pinhole like aperture, a region that includes a plurality of holes radially spaced from the aperture, and a region that includes rectangular slots spaced radially from the holes.

[0049] **FIG. 29** is a side view of the mask of **FIG. 28**.

[0050] **FIG. 30** is a frontal plan view of an embodiment of a mask that includes a non-circular pinhole like aperture, a first set of slots radially spaced from the aperture, and a region that includes a second set of slots extending to the periphery of the mask and radially spaced from the first set of slots.

[0051] **FIG. 31** is a side view of the mask of **FIG. 30**.

[0052] **FIG. 32** is a frontal plan view of an embodiment of a mask that includes a central pinhole like aperture and a plurality of holes radially spaced from the aperture.

[0053] **FIG. 33** is a side view of the mask of **FIG. 32**.

[0054] **FIG. 34** is an embodiment of a mask that includes two semi-circular mask portions.

[0055] **FIG. 35** is an embodiment of a mask that includes a half-moon shaped region and a centrally-located pinhole like aperture.

[0056] **FIG. 36** is an embodiment of a mask including two half-moon shaped portions.

[0057] **FIG. 37** is a enlarged, diagrammatic view of an embodiment of a mask that includes particulate structure adapted for selectively controlling light transmission through the mask in a high light environment.

[0058] **FIG. 38** is a view of the mask of **FIG. 37** in a low light environment.

[0059] **FIG. 39** is an embodiment of a mask that includes a barcode formed on the annular region of the mask.

[0060] **FIG. 40** is another an embodiment of a mask that includes connectors for securing the mask within the eye.

[0061] **FIG. 41** is a plan view of an embodiment of a mask made of a spiraled fibrous strand.

[0062] **FIG. 42** is a plan view of the mask of **FIG. 41** being removed from the eye.

[0063] **FIG. 43** is a cross-sectional view similar to that of **FIG. 1**, but showing certain axes of the eye.

[0064] **FIG. 44A** illustrates a single-target fixation method for aligning an eye with the optical axis of an ophthalmic instrument.

[0065] **FIG. 44B** illustrates another single-target fixation method for aligning an eye with the optical axis of an ophthalmic instrument.

[0066] **FIG. 45A** shows an apparatus for projecting a target onto an optical axis at an infinite distance.

[0067] **FIG. 45B** shows an apparatus for projecting a target onto an optical axis at a finite distance.

[0068] **FIG. 46** illustrates a dual-target fixation method.

[0069] **FIG. 47** shows an apparatus with which two targets can be projected simultaneously by the same projection lens to provide fixation targets at a large distance (such as infinity) and a shorter (finite) distance.

[0070] **FIG. 48** shows another embodiment of an apparatus for combining two targets to project them simultaneously at different axial distances.

[0071] **FIG. 49A** shows an example of a dual target pattern as viewed by the patient when the target patterns are aligned.

[0072] **FIG. 49B** shows the dual target pattern of **FIG. 49A** when the patterns are offset.

[0073] **FIG. 50A** shows an example of another dual target pattern as viewed by the patient when the target patterns are aligned.

[0074] **FIG. 50B** shows the dual target pattern of **FIG. 50A** when the target patterns are offset.

[0075] **FIG. 51** shows one embodiment of an apparatus configured to locate the visual axis of an eye of a patient by aligning the axis with an axis of the apparatus.

[0076] **FIG. 52** is a flow chart illustrating one method of screening a patient for the use of a mask.

[0077] **FIG. 53A-53C** show a mask, similar to those described herein, inserted beneath an epithelium sheet of a cornea.

[0078] **FIG. 54A-54C** show a mask, similar to those described herein, inserted beneath an Bowman's membrane of a cornea.

[0079] **FIG. 55** is a schematic diagram of one embodiment of a surgical system configured located the visual axis of a patient's eye by aligning the visual axis with an axis of the system.

[0080] **FIG. 55A** is a perspective view of another embodiment of a dual target fixation target.

[0081] **FIG. 55B** is a top view of the fixation target of **FIG. 55A** showing the first target.

[0082] **FIG. 55C** is a top view of the fixation target of **FIG. 55A** showing the second target.

[0083] **FIG. 56** is a top view of another embodiment of a surgical system that includes an alignment device and a clamp configured to couple the alignment device with a surgical viewing device.

[0084] **FIG. 57** is a perspective view of the alignment device shown in **Figure 56**.

[0085] **FIG. 58** is a top view of the alignment device shown in **FIG. 57**.

[0086] **FIG. 59** is a schematic view of internal components of the alignment device of **FIG. 57**.

[0087] **FIG. 60** is a top view of another embodiment of a mask configured to increase depth of focus.

[0088] **FIG. 60A** is an enlarged view of a portion of the view of **FIG. 60**.

[0089] **FIG. 61A** is a cross-sectional view of the mask of **FIG. 60A** taken along the section plane **61**—**61**.

[0090] **FIG. 61B** is a cross-sectional view similar to **FIG. 61A** of another embodiment of a mask.

[0091] **FIG. 61C** is a cross-sectional view similar to **FIG. 61C** of another embodiment of a mask.

[0092] **FIG. 62A** is a graphical representation of one arrangement of holes of a plurality of holes that may be formed on the mask of **FIG. 60**.

[0093] **FIG. 62B** is a graphical representation of another arrangement of holes of a plurality of holes that may be formed on the mask of **FIG. 60**.

[0094] **FIG. 62C** is a graphical representation of another arrangement of holes of a plurality of holes that may be formed on the mask of **FIG. 60**.

[0095] **FIG. 63A** is an enlarged view similar to that of **FIG. 60A** showing a variation of a mask having non-uniform size.

[0096] **FIG. 63B** is an enlarged view similar to that of **FIG. 60A** showing a variation of a mask having a non-uniform facet orientation.

[0097] **FIG. 64** is a top view of another embodiment of a mask having a hole region and a peripheral region.

[0098] **FIG. 65** is a cross-sectional view of an eye illustrating a treatment of a patient wherein a flap is opened to place an implant and a location is marked for placement of the implant.

[0099] **FIG. 65A** is a partial plan view of the eye of **FIG. 65** wherein an implant has been applied to a corneal flap and positioned with respect to a ring.

[0100] **FIG. 66** is a cross-sectional view of an eye illustrating a treatment of a patient wherein a pocket is created to place an implant and a location is marked for placement of the implant.

[0101] **FIG. 66A** is a partial plan view of the eye of **FIG. 66** wherein an implant has been positioned in a pocket and positioned with respect to a ring.

DETAILED DESCRIPTION OF THE PREFERRED EMBODIMENT

[0102] This application is directed to masks for improving the depth of focus of an eye of a patient and methods and apparatuses for applying such masks. The masks generally employ pin-hole vision correction and have nutrient transport structures. The masks may be applied to the eye in any manner and in any location, e.g., as an implant in the cornea (sometimes referred to as a "corneal inlay"). The masks can also be embodied in or combined with lenses and applied in other regions of the eye, e.g., as or in combination with a contact lenses or an intraocular lenses. Apparatuses and methods for applying the masks to the patient generally use the patient's vision to locate the patient's line of sight while the mask is being applied to the eye so that the mask may be properly aligned with the line of sight.

I. Overview of Pin-Hole Vision Correction

[0103] A mask that has a pinhole aperture may be used to improve the depth of focus of a human eye. As discussed above, presbyopia is a problem of the human eye that commonly occurs in older human adults wherein the ability to focus becomes limited to inadequate range. **FIGS. 1-6** illustrate how presbyopia interferes with the normal function of the eye and how a mask with a pinhole aperture mitigates the problem.

[0104] **FIG. 1** shows the human eye, and **FIG. 2** is a side view of the eye **10**. The eye **10** includes a cornea **12** and an intraocular lens **14** posterior to the cornea **12**. The cornea **12** is a first focusing element of the eye **10**. The intraocular lens **14** is a second focusing element of the eye **10**. The eye **10** also includes a retina **16**, which lines the interior of the rear surface of the eye **10**. The retina **16** includes the receptor cells which are primarily responsible for the sense of vision. The retina **16** includes a highly sensitive region, known as the macula, where signals are received and transmitted to the visual centers of the brain via the optic nerve **18**. The retina **16** also includes a point with particularly high sensitivity **20**, known as the fovea. As discussed in more detail in connection with **FIG. 8**, the fovea **20** is slightly offset from the axis of symmetry of the eye **10**.

[0105] The eye **10** also includes a ring of pigmented tissue known as the iris **22**. The iris **22** includes smooth muscle for controlling and regulating the size of an opening **24** in the iris **22**, which is known as the pupil. An entrance pupil **26** is seen as the image of the iris **22** viewed through the cornea **12** (See **FIG. 7**). A central point of the entrance pupil **28** is illustrated in **FIG. 7** and will be discussed further below.

[0106] The eye **10** resides in an eye-socket in the skull and is able to rotate therein about a center of rotation **30**.

[0107] **FIG. 3** shows the transmission of light through the eye **10** of a presbyotic patient. Due to either an aberration in the cornea **12** or the intraocular lens **14**, or loss of muscle control, light rays **32** entering the eye **10** and passing through the cornea **12** and the intraocular lens **14** are refracted in such a way that the light rays **32** do not converge at a single focal point on the retina **16**. **FIG. 3** illustrates that in a presbyotic patient, the light rays **32** often converge at a point behind the retina **16**. As a result, the patient experiences blurred vision.

[0108] Turning now to **FIG. 4**, there is shown the light transmission through the eye **10** to which a mask **34** has been applied. The mask **34** is shown implanted in the cornea **12** in **FIG. 4**. However, as discussed below, it will be understood that the mask **34** can be, in various modes of application, implanted in the cornea **12** (as shown), used as a contact lens placed over the cornea **12**, incorporated in the intraocular lens **14** (including the patient's original lens or an implanted lens), or otherwise positioned on or in the eye **10**. In the illustrated embodiment, the light rays **32** that pass through the mask **34**, the cornea **12**, and the lens **14** converge at a single focal point on the retina **16**. The light rays **32** that would not converge at the single point on retina **16** are blocked by the mask **34**. As discussed below, it is desirable to position the mask **34** on the eye **10** so that the light rays **32** that pass through the mask **34** converge at the fovea **20**.

[0109] Turning now to **FIG. 6**, there is shown one embodiment of the mask **34**. As seen, the mask **34** preferably includes an annular region **36** surrounding a pinhole opening or aperture **38** substantially centrally located on the mask **34**. The pinhole aperture **38** is generally located around a central

axis **39**, referred to herein as the optical axis of the mask **34**. The pinhole aperture **38** preferably is in the shape of a circle. It has been reported that a circular aperture, such as the aperture **38** may, in some patients, produce a so-called "halo effect" where the patient perceives a shimmering image around the object being viewed. Accordingly, it may be desirable to provide an aperture **38** in a shape that diminishes, reduces, or completely eliminates the so-called "halo effect."

II. Masks Employing Pin-Hole Correction

[0110] **FIGS. 7-42** illustrate a variety of embodiments of masks that can improve the vision of a patient with presbyopia. The masks described in connection with **FIG. 7-42** are similar to the mask **34**, except as set forth below. Accordingly, the masks described in connection with **FIGS. 7-42** can be used and applied to the eye **10** of a patient in a similar fashion to the mask **34**. For example, **FIG. 7** shows an embodiment of a mask **34***a* that includes an aperture **38***a* formed in the shape of a hexagon. **FIG. 8** shows another embodiment of a mask **34***b* that includes an aperture **38***b* formed in the shape of an octagon. **FIG. 9** shows another embodiment of a mask **34***c* that includes an aperture **38***c* formed in the shape of an oval, while **FIG. 10** shows another embodiment of a mask **34***d* that includes an aperture **38***d* formed in the shape of a pointed oval. **FIG. 11** shows another embodiment of a mask **34***e* wherein the aperture **38***e* is formed in the shape of a star or starburst.

[0111] **FIGS. 12-14** illustrate further embodiments that have tear-drop shaped apertures. **FIG. 12** shows a mask **34***f* that has a tear-drop shaped aperture **38***f* that is located above the true center of the mask **34***f*. **FIG. 13** shows a mask **34***g* that has a tear-drop shaped aperture **38***g* that is substantially centered in the mask **34***g*. **FIG. 14** shows a mask **34***h* that has a tear-drop shaped aperture **38***h* that is below the true center of the mask **34***h*. **FIG. 12-14** illustrate that the position of aperture can be tailored, e.g., centered or off-center, to provide different effects. For example, an aperture that is located below the true center of a mask generally will allow more light to enter the eye because the upper portion of the aperture **34** will not be covered by the eyelid of the patient. Conversely, where the aperture is located above the true center of the mask, the aperture may be partially covered by the eyelid. Thus, the above-center aperture may permit less light to enter the eye.

[0112] **FIG. 15** shows an embodiment of a mask **34***i* that includes an aperture **38***i* formed in the shape of a square. **FIG. 16** shows an embodiment of a mask **34***j* that has a kidney-shaped aperture **38***j*. It will be appreciated that the apertures shown in **FIGS. 7-16** are merely exemplary of non-circular apertures. Other shapes and arrangements may also be provided and are within the scope of the present invention.

[0113] The mask **34** preferably has a constant thickness, as discussed below. However, in some embodiments, the thickness of the mask may vary between the inner periphery (near the aperture **38**) and the outer periphery. **FIG. 17** shows a mask **34***k* that has a convex profile, i.e., that has a gradually decreasing thickness from the inner periphery to the outer periphery. **FIG. 18** shows a mask **341** that has a concave profile, i.e., that has a gradually increasing thickness from the inner periphery to the outer periphery. Other cross-sectional profiles are also possible.

[0114] The annular region **36** is at least partially and preferably completely opaque. The opacity of the annular region **36** prevents light from being transmitted through the mask **32** (as generally shown in **FIG. 4**). Opacity of the annular region **36** may be achieved in any of several different ways.

[0115] For example, in one embodiment, the material used to make mask **34** may be naturally opaque. Alternatively, the material used to make the mask **34** may be substantially clear, but treated with a dye or other pigmentation agent to render region **36** substantially or completely opaque. In still another example, the surface of the mask **34** may be treated physically or chemically (such as by etching) to alter the refractive and transmissive properties of the mask **34** and make it less transmissive to light.

[0116] In still another alternative, the surface of the mask **34** may be treated with a particulate deposited thereon. For example, the surface of the mask **34** may be deposited with particulate of titanium, gold or carbon to provide opacity to the surface of the mask **34**. In another alternative, the particulate may be encapsulated within the interior of the mask **34**, as generally shown in **FIG. 19**. Finally, the mask **34** may be patterned to provide areas of varying light transmissivity, as generally shown in **FIGS. 24-33**, which are discussed in detail below.

[0117] Turning to **FIG. 20**, there is shown a mask **34***m* formed or made of a woven fabric, such as a mesh of polyester fibers. The mesh may be a cross-hatched mesh of fibers. The mask **34***m* includes an annular region **36***m* surrounding an aperture **38***m*. The annular region **36***m* comprises a plurality of generally regularly positioned apertures **36***m* in the woven fabric allow some light to pass through the mask **34***m*. The amount of light transmitted can be varied and controlled by, for example, moving the fibers closer together or farther apart, as desired. Fibers more densely distributed allow less light to pass through the annular region **36***m*. Alternatively, the thickness of fibers can be varied to allow more or less light through the openings of the mesh. Making the fiber strands larger results in the openings being smaller.

[0118] **FIG. 22** shows an embodiment of a mask **34***n* that includes an annular region **36***n* that has sub-regions with different opacities. The opacity of the annular region **36***n* may gradually and progressively increase or decrease, as desired. **FIG. 22** shows one embodiment where a first area **42** closest to an aperture **38***n* has an opacity of approximately 60%. In this embodiment, a second area **44**, which is outlying with respect to the first area **42**, has a greater opacity, such as 70%. In this embodiment, a third area **46**, which is outlying with respect to the second area **42**, has an opacity of between 85 to 100%. The graduated opacity of the type described above and shown in **FIG. 22** is achieved in one embodiment by, for example, providing different degrees of pigmentation to the areas **42**, **44** and **46** of the mask **34***n*. In another embodiment, light blocking materials of the type described above in variable degrees may be selectively deposited on the surface of a mask to achieve a graduated opacity.

[0119] In another embodiment, the mask may be formed from co-extruded rods made of material having different light transmissive properties. The co-extruded rod may then be sliced to provide disks for a plurality of masks, such as those described herein.

[0120] **FIGS. 24-33** shows examples of masks that have been modified to provide regions of differing opacity. For example, **FIG. 24** shows a mask **34***o* that includes an aperture **38***o* and a plurality of cutouts **48** in the pattern of radial spokes extending from near the aperture **38***o* to an outer periphery **50** of the mask **34***o*. **FIG. 24** shows that the cutouts **48** are much more densely distributed about a circumference of the mask near aperture **38***o* than are the cutouts **48** about a circumference of the mask near the outer periphery **50**. Accordingly, more light passes through the mask **34***o* nearer aperture **38***o* than near the periphery **50**. The change in light transmission through the mask **34***o* is gradual.

[0121] **FIGS. 26-27** show another embodiment of a mask **34***p*. The mask **34***p* includes an aperture **38***p* and a plurality of circular cutouts **52***p*, and a plurality of cutouts **54***p*. The circular cutouts **52***p* are located proximate the aperture **38***p*. The cutouts **54***p* are located between the circular cutouts **52***p* and the periphery **50***p*. The density of the circular cutouts **52***p* generally decreases from the near the aperture **38***p* toward the periphery **50***p*. The periphery **50***p* of the mask **34***p* is scalloped by the presence of the cutouts **54**, which extend inward from the periphery **50***p*, to allow some light to pass through the mask at the periphery **50***p*.

[0122] **FIGS. 28-29** shows another embodiment similar to that of **FIGS. 26-27** wherein a mask **34***q* includes a plurality of circular cutouts **52***q* and a plurality of cutouts **54***q*. The cutouts **54***q* are disposed along the outside periphery **50***q* of the mask **34***q*, but not so as to provide a scalloped periphery.

[0123] **FIGS. 30 and 31** illustrate an embodiment of a mask **34***r* that includes an annular region **36***r* that is patterned and an aperture **38***r* that is non-circular. As shown in **FIG. 30**, the aperture **38***r* is in the shape of a starburst. Surrounding the aperture **38***r* is a series of cutouts **54***r* that are more densely spaced toward the aperture **38***r*. The mask **34***r* includes an outer periphery **50***r* that is scalloped to provide additional light transmission at the outer periphery **50***r*.

[0124] **FIGS. 32 and 33** show another embodiment of a mask **34***s* that includes an annular region **36***s* and an aperture **38***s*. The annular region **36***s* is located between an outer periphery **50***s* of the mask **34***s* and the aperture **38***s*. The annular region **36***s* is patterned. In particular, a plurality of circular openings **56***s* is distributed over the annular region **36***s* of the mask **34***s*. It will be appreciated that the density of the openings **56***s* is greater near the aperture **38***s* than near the periphery **50***s* of the mask **34***s*. As with the examples described above, this results in a gradual increase in the opacity of the mask **34***s* from aperture **38***s* to periphery **50***s*.

[0125] **FIGS. 34-36** show further embodiments. In particular, **FIG. 34** shows a mask **34***t* that includes a first mask portion **58***t* and a second mask portion **60***t*. The mask portions **58***t*, **60***t* are generally "C-shaped." As shown in **FIG. 34**, the mask portions **58***t*, **60***t* are implanted or inserted such that the mask portions **58***t*, **60***t* define a pinhole or aperture **38***t*.

[0126] **FIG. 35** shows another embodiment wherein a mask **34***u* includes two mask portions **58***u*, **60***u*. Each mask portion **58***u*, **60***u* is in the shape of a half-moon and is configured to be implanted or inserted in such a way that the two halves define a central gap or opening **62***u*, which permits light to pass therethrough. Although opening **62***u* is not a circular pinhole, the mask portions **58***u*, **60***u* in combination with the eyelid (shown as dashed line **64**) of the patient provide a comparable pinhole effect.

[0127] **FIG. 36** shows another embodiment of a mask **34***v* that includes an aperture **38***v* and that is in the shape of a half-moon. As discussed in more detail below, the mask **34***v* may be implanted or inserted into a lower portion of the cornea **12** where, as described above, the combination of the mask **34***v* and the eyelid **62** provides the pinhole effect.

[0128] Other embodiments employ different ways of controlling the light transmissivity through a mask. For example, the mask may be a gel-filled disk, as shown in **FIG. 19**. The gel may be a hydrogel or collagen, or other suitable material that is biocompatible with the mask material and can be introduced into the interior of the mask. The gel within the mask may include particulate **66** suspended within the gel. Examples of suitable particulate are gold, titanium, and carbon particulate, which, as discussed above, may alternatively be deposited on the surface of the mask.

[0129] The material of the mask **34** may be any biocompatible polymeric material. Where a gel is used, the material is suitable for holding a gel. Examples of suitable materials for the mask **34** include the preferred polymethylmethacrylate or other suitable polymers, such as polycarbonates and the like. Of course, as indicated above, for non-gel-filled materials, a preferred material may be a fibrous material, such as a Dacron mesh.

[0130] The mask **34** may also be made to include a medicinal fluid, such as an antibiotic that can be selectively released after application, insertion, or implantation of the mask **34** into the eye of the patient. Release of an antibiotic after application, insertion, or implantation provides faster healing of the incision. The mask **34** may also be coated with other desired drugs or antibiotics. For example, it is known that cholesterol deposits can build up on the eye. Accordingly, the mask **34** may be provided with a releasable cholesterol deterring drug. The drug may be coated on the surface of the mask **34** or, in an alternative embodiment, incorporated into the polymeric material (such as PMMA) from which the mask **34** is formed.

[0131] **FIGS. 37 and 38** illustrate one embodiment where a mask **34***w* comprises a plurality of nanites **68**. "Nanites" are small particulate structures that have been adapted to selectively transmit or block light entering the eye of the patient. The particles may be of a very small size typical of the particles used in nanotechnology applications. The nanites **68** are suspended in the gel or otherwise inserted into the interior of the mask **34***w*, as generally shown in **FIGS. 37 and 38**. The nanites **68** can be preprogrammed to respond to different light environments.

[0132] Thus, as shown in **FIG. 37**, in a high light environment, the nanites **68** turn and position themselves to substantially and selectively block some of the light from entering the eye. However, in a low light environment where it is desirable for more light to enter the eye, nanites may respond by turning or be otherwise positioned to allow more light to enter the eye, as shown in **FIG. 38**.

[0133] Nano-devices or nanites are crystalline structures grown in laboratories. The nanites may be treated such that they are receptive to different stimuli such as light. In

accordance with one aspect of the present invention, the nanites can be imparted with energy where, in response to a low light and high light environments, they rotate in the manner described above and generally shown in **FIG. 38**.

[**0134**] Nanoscale devices and systems and their fabrication are described in Smith et al., "Nanofabrication," Physics Today, February 1990, pp. 24-30 and in Craighead, "Nanoelectromechanical Systems," Science, Nov. 24, 2000, Vol. 290, pp. 1532-1535, both of which are incorporated by reference herein in their entirety. Tailoring the properties of small-sized particles for optical applications is disclosed in Chen et al. "Diffractive Phase Elements Based on Two-Dimensional Artificial Dielectrics," Optics Letters, Jan. 15, 1995, Vol. 20, No. 2, pp. 121-123, also incorporated by reference herein in its entirety.

[**0135**] Masks **34** made in accordance with the present invention may be further modified to include other properties. **FIG. 39** shows one embodiment of a mask **34***x* that includes a bar code **70** or other printed indicia.

[**0136**] The masks described herein may be incorporated into the eye of a patient in different ways. For example, as discussed in more detail below in connection with **FIG. 52**, the mask **34** may be provided as a contact lens placed on the surface of the eyeball **10**. Alternatively, the mask **34** may be incorporated in an artificial intraocular lens designed to replace the original lens **14** of the patient. Preferably, however, the mask **34** is provided as a corneal implant or inlay, where it is physically inserted between the layers of the cornea **12**.

[**0137**] When used as a corneal implant, layers of the cornea **12** are peeled away to allow insertion of the mask **34**. Typically, the optical surgeon (using a laser) cuts away and peels away a flap of the overlying corneal epithelium. The mask **34** is then inserted and the flap is placed back in its original position where, over time, it grows back and seals the eyeball. In some embodiments, the mask **34** is attached or fixed to the eye **10** by support strands **72** and **74** shown in **FIG. 40** and generally described in U.S. Pat. No. 4,976,732, incorporated by reference herein in its entirety.

[**0138**] In certain circumstances, to accommodate the mask **34**, the surgeon may be required to remove additional corneal tissue. Thus, in one embodiment, the surgeon may use a laser to peel away additional layers of the cornea **12** to provide a pocket that will accommodate the mask **34**. Application of the mask **34** to the cornea **12** of the eye **10** of a patient is described in greater detail in connection with **FIGS. 53A-54C**.

[**0139**] Removal of the mask **34** may be achieved by simply making an additional incision in the cornea **12**, lifting the flap and removing the mask **34**. Alternatively, ablation techniques may be used to completely remove the mask **34**.

[**0140**] **FIGS. 41 and 42** illustrate another embodiment, of a mask **34***y* that includes a coiled strand **80** of a fibrous or other material. Strand **80** is coiled over itself to form the mask **34***y*, which may therefore be described as a spiral-like mask. This arrangement provides a pinhole or aperture **38***y* substantially in the center of the mask **34***y*. The mask **34***y* can be removed by a technician or surgeon who grasps the strand **80** with tweezers **82** through an opening made in a flap of the corneal **12**. **FIG. 42** shows this removal technique.

[**0141**] Further mask details are disclosed in U.S. Pat. No. 4,976,732, issued Dec. 11, 1990 and in U.S. Provisional Application Ser. No. 60/473,824, filed May 28, 2003, both of which are incorporated by reference herein in their entirety.

III. Methods of Applying Pinhole Aperture Devices

[**0142**] The various masks discussed herein can be used to improve the vision of a presbyopic patient as well as patient's with other vision problems. The masks discussed herein can be deployed in combination with a LASIK procedure, to eliminate the effects of abrasions, aberrations, and divots in the cornea. It is also believed that the masks disclosed herein can be used to treat patients suffering from macular degeneration, e.g., by directing light rays to unaffected portions of retina, thereby improving the vision of the patient. Whatever treatment is contemplated, more precise the alignment of the central region of a mask with a pin-hole aperture with the visual axis of the patient is believed to provide greater clinical effect to the patient.

A. Alignment of the Pinhole Aperture with the Patient's Visual Axis

[**0143**] Alignment of the central region of the pinhole aperture **38**, in particular, the optical axis **39**, of the mask **34** with the visual axis of the eye **10** may be achieved in a variety of ways. As discussed more fully below, such alignment may be achieved by imaging two reference targets at different distances and effecting movement of the patient's eye to a position where the images of the first and second reference targets appear aligned as viewed by the patient's eye. When the patient views the targets as being aligned, the patient's visual axis is located.

[**0144**] **FIG. 43** is a cross-sectional view of the eye **10**, similar to that shown in **FIG. 1**, indicating a first axis **1000** and a second axis **1004**. The first axis **1000** represents the visual axis, or line of sight, of the patient and the second axis **1004** indicates the axis of symmetry of the eye **10**. The visual axis **1000** is an axis that connects the fovea **20** and a target **1008**. The visual axis **1000** also extends through the central point **28** of the entrance pupil **26**. The target **1008** is sometimes referred to herein as a "fixation point." The visual axis **1000** also corresponds to the chief ray of the bundle of rays emanating from the target **1008** that passes through the pupil **22** and reaches the fovea **20**. The axis of symmetry **1004** is an axis passing through the central point **28** of the entrance pupil **26** and the center of rotation **30** of the eye **10**. As described above, the cornea **12** is located at the front of the eye **10** and, along with the iris **22**, admits light into the eye **10**. Light entering the eye **10** is focused by the combined imaging properties of the cornea **12** and the intraocular lens **14** (see **FIGS. 2-3**).

[**0145**] In a normal eye, the image of the target **1008** is formed at the retina **16**. The fovea **20** (the region of the retina **16** with particularly high resolution) is slightly off-set from the axis of symmetry **1004** of the eye **10**. This visual axis **1000** is typically inclined at an angle θ of about six (6) degrees to the axis of symmetry **1004** of the eye **10** for an eye with a centered iris.

[**0146**] **FIGS. 44A and 44B** illustrate single-target fixation methods for aligning an eye with an optical axis of an instrument also referred to herein as an "instrument axis." In **FIG. 44A**, the eye **10** is shown looking into an aperture of

a projection lens **1012**. The lens aperture is shown as the entire lens **1012**. The projection lens **1012** reimages a reference target **1016** at an infinite distance, producing a collimated beam **1020**.

[**0147**] The reference target **1016** in **FIG. 44A** is shown reimaged at an infinite distance, which is achieved by positioning the target object at a distance **1024** equal to the focal length f of the lens **1012**, i.e. the reference target **1016** is at the lens focal point. To first-order approximation, the relationship between the object and the image distances for a lens of focal length f follows the Gaussian equation (1/A)=(1/f)+(1/B) where B and A are respectively the object and image distances measured from the lens center. Because the illuminated target appears at an infinite distance as viewed by the eye **10**, individual light rays **1020***a* to **1020***g* are parallel to each other.

[**0148**] **FIG. 44A** shows the eye **10** fixated on the reference target **1016** along a ray **1020***c*, which appears to come from the reference target **1016** as imaged by the projection lens **1012**. The eye **10** is here decentered a distance **1028** from an optical axis **1032** of the instrument, i.e., the instrument axis, which may be the central axis of the lens **1012**. This decentration of the eye **10** with respect to the optical axis **1032** of the instrument does not affect fixation to an infinitely distant image because all rays projected by the lens **1012** are parallel. As such, in an instrument that relies on fixation to a single target imaged at infinity, an eye can be fixated on the target but still be off-center of the optical axis of the instrument.

[**0149**] **FIG. 44B** is similar to **FIG. 44A**, except that a reference target **1016'** is located somewhat closer to the projection lens **1012** that is the reference target **1016** so that an image **1036** of the reference target **1016'** appears at a large but finite distance **1040** behind the lens **1012**. As was the case in **FIG. 44A**, the eye **10** in **FIG. 44B** is fixated on the reference target **1016'** along a ray **1020***c'*, which is decentered a distance **1028** from an optical axis **1032** of the instrument. However, the rays **1020***a'* to **1020***g'* projected by the lens **1012** shown in **FIG. 44B** are seen to diverge as if they originated at the image **1036** of the reference target **1016'**, which is located on the optical axis **1032** of the lens **1012** at a finite distance **1040** from the lens **1012**. If the decentration of the eye **10** (corresponding to the distance **1028**) changes, the eye **10** must rotate somewhat about its center of rotation **30** in order to fixate on the image **1036**. The eye **10** in **FIG. 44B** is shown rotated by some angle so as to align its visual axis **1000** with the direction of propagation of ray **1020***c'*. Thus, in general, a decentered eye fixated on a finite-distance target is not merely off-center but is also angularly offset from the optical axis **1032** of the instrument.

[**0150**] **FIG. 45A** shows one embodiment of a projection lens **1012** used to create an optical image at infinite distance, as was schematically shown in **FIG. 44A**. The reference target **1016** typically is a back-illuminated pattern on a transparent glass reticle **1044**. The reference target **1016** is located at a distance **1024** on the lens' optical axis **1032** at the lens' focal point, i.e. the reference target **1016** is located such that the distance **1024** is equal to the distance f. A diffusing plate **1048** and a condensing lens **1052** are used to ensure full illumination of the reference target **1016** throughout the aperture of the projection lens **1012**. Light rays projected by the projection lens **1012** are substantially parallel depending upon the degree of imaging perfection achieved in the optical system. Assuming a well-corrected lens with small aberrations, the image as observed through the aperture of the projection lens **1012** will appear to be at infinity.

[**0151**] **FIG. 45B** shows a somewhat different optical system in which a target **1016'** is projected so that an image **1036** appears at a large but finite distance **1040** behind the lens **1012**, as was shown schematically in **FIG. 44B**. The diffusing plate **1048** and the condensing lens **1052** again are used to ensure that full illumination of the target reference **112'** is achieved throughout the aperture of the projection lens **1012**. In the system of **FIG. 45B**, the reference target **1016'** is located at an object distance **1024'**, which is inside the focal point in accordance with the aforementioned Gaussian equation. Thus, the object distance **1024'** is a distance that is less than the focal length f of the lens **1012'**. The path of a typical light ray **1056** from the center of the reference target **1016'** is shown. If the eye **10** is aligned with this ray **1056**, the reference target **1016** is observed as if it were located at the location of the image **1036**, i.e. at a finite distance. The ray **1056** would then be similar to ray **1020***c'* of **FIG. 44B**, and fixation of the eye **10** could be established as appropriate for the given degree of decentration from the optical axis **1032**.

[**0152**] **FIG. 46** illustrates a fixation method whereby the single-target fixation methods shown in **FIGS. 44A and 44B** are both used simultaneously in a dual-target fixation system. With two fixation targets **1016** and **1016'** at different distances, the eye **10** will see angular disparity (parallax) between the target images (i.e., they will not appear to be superimposed) if the eye is decentered. The rays **1020***a* to **1020***g* of the infinite-distance target **1016** are parallel to one another, while the rays **1020***a'* to **1020***g'* of the finite distance target **1016'** diverge. The only rays of the targets that coincide are rays **1020***d* and **10204***d'*, which are collinear along the optical axis **1032** of the instrument. Thus, the eye **10** can be simultaneously fixated on both targets if the visual axis, represented by the first axis **1000** of the eye **10**, is centered on the optical axis of the instrument, i.e. along the ray **1020***d* (which is the same as **1020***d'*). Thus, when the visual axis of the eye **10** lies on the optical axis **1032** of the apparatus, both images are fixated.

[**0153**] **FIG. 47** shows schematically an apparatus with which two reticle patterns could be projected simultaneously by the same projection lens to provide fixation targets **1016** and **1016'** at a large distance **1024** (such as infinity) and a shorter (finite) distance **1024'**. It is preferable that both fixation targets are at relatively large distances so that only slight focus accommodation of the eye **10** is required to compensate for these different distances. By instructing the patient to move his or her eye transversely with respect to the instrument axis until a visual event occurs, e.g., angular displacement (parallax) between the images is minimized, alignment of the eye **10** with the optical axis **1032** of the apparatus is facilitated. Providing two fixation targets at different apparent distances will simplify accurate alignment of the sighted eye with an ophthalmic apparatus in the surgical procedures disclosed herein and in other similar surgical procedures.

[**0154**] **FIG. 48** shows another embodiment of an apparatus for combining two fixation targets **1016** and **1016'** to

project them simultaneously at different axial distances. A beamsplitter plate or cube **1060** is inserted between the patterns and the projection lens **1012** so each pattern can be illuminated independently. In the embodiments of **FIGS. 46 and 47**, the targets **1016**, **1016'** can be opaque lines seen against a light background, bright lines seen against a dark background, or a combination of these forms.

[**0155**] **FIG. 49A** shows an example of a typical dual pattern as viewed by the patient when the patterns are aligned, i.e. when the patient's eye is aligned with the optical axis of the apparatus. The dual pattern set in this embodiment comprises an opaque fine-line cross **1064** seen against a broader bright cross **1068**. **FIG. 49B** shows the same dual pattern set as shown in **FIG. 49A**, except the patterns are offset, indicating that the eye **10** is decentered with respect to the optical axis of the associated optical instrument.

[**0156**] **FIG. 50A** shows an example of another dual pattern as viewed by the patient when the patterns are aligned, i.e. when the patient's eye is aligned with the optical axis of the ophthalmic instrument. The dual pattern set in this embodiment comprises an opaque circle **1072** seen against a bright circle **1076**. The circle **1072** has a diameter that is greater than the diameter of the circle **1076**. **FIG. 50B** shows the same dual pattern set as shown in **FIG. 50A**, except the patterns are offset, indicating that the eye **10** is decentered with respect the optical axis of the associated optical instrument. It is not necessary that the targets appear as crosses or circles; patterns such as dots, squares, and other shapes and patterns also can suffice.

[**0157**] In another embodiment, color is used to indicate when the patient's eye is aligned with the optical axis of the apparatus. For example, a dual color set can be provided. The dual color set may comprise a first region of a first color and a second region of a second color. As discussed above in connection with the dual pattern sets, the patient visual axis is located when the first color and the second color are in a particular position relative to each other. This may cause a desired visual effect to the patient's eye, e.g., when the first region of the first color is aligned with the second region of the second color, the patient may observe a region of a third color. For example, if the first region is colored blue and the second region is colored yellow, the patient will see a region of green. Additional details concerning locating a patient's visual axis or line of sight are contained in U.S. Pat. No. 5,474,548, issued Dec. 12, 1995, incorporated by reference herein in its entirety.

[**0158**] **FIG. 51** shows one embodiment of an ophthalmic instrument **1200** that can be used in connection with various methods described herein to locate the visual axis of a patient. The instrument **1200** includes an optics housing **1202** and a patient locating fixture **1204** that is coupled with the optics housing **1202**. The optics housing **1202** includes an optical system **1206** that is configured to project two reticle patterns simultaneously to provide fixation targets at a large distance, e.g., infinity, and a shorter, finite distance.

[**0159**] In the illustrated embodiment, the optical system **1206** of the instrument includes a first reference target **1208**, a second reference target **1210**, and a projection lens **1212**. The first and second reference targets **1208**, **1210** are imaged by the projection lens **1212** along an instrument axis **1213** of the ophthalmic instrument **1200**. In one embodiment, the first reference target **1208** is formed on a first glass reticle **1214** located a first distance **1216** from the lens **1212** and the second target **1210** is formed on a second glass reticle **1218** located a second distance **1220** from the lens **1212**. Preferably, the second distance **1220** is equal to the focal length f of the lens **1212**, as was discussed in connection with **FIG. 44A**. As discussed above, positioning the second target **1210** at the focal length f of the lens **1212** causes the second target **1210** to be imaged at an infinite distance from the lens **1212**. The first distance **1216** preferably is less than the second distance **1220**. As discussed above, the first reference target **1208** is thereby imaged at a large but finite distance from the lens **1212**. By positioning the first and second reference targets **1208**, **1210** in this manner, the method set forth above for aligning the eye **10** of the patient may be implemented with the ophthalmic instrument **1200**.

[**0160**] The optical system **1206** preferably also includes a light source **1222** that marks the visual axis of the patient after the visual axis has been located in the manner described above. In the illustrated embodiment, the light source **1222** is positioned separately from the first and second reference targets **1208**, **1210**. In one embodiment, the light source **1222** is positioned at a ninety degree angle to the instrument axis **1213** and is configured to direct light toward the axis **1213**. In the illustrated embodiment, a beamsplitter plate or cube **1224** is provided between the first and second reference targets **1208**, **1210** and the patient to route light rays emitted by the light source **1222** to the eye of the patient. The beamsplitter **1224** is an optical component that reflects light rays from the direction of the light source **1222**, but permits the light rays to pass through the beamsplitter along the instrument axis **1213**. Thus, light rays form the first and second reference targets **1208**, **1210** and from the light source **1222** may be propagated toward the eye of the patient. Other embodiments are also possible. For example, the beamsplitter **1224** could be replaced with a mirror that is movable into and out of the instrument axis **1213** to alternately reflect light from the light source **1222** to the eye or to permit light from the first and second reference targets **1208**, **1210** to reach the eye.

[**0161**] The patient locating fixture **1204** includes an elongate spacer **1232** and a contoured locating pad **1234**. The contoured locating pad **1234** defines an aperture through which the patient may look along the instrument axis **213**. The spacer **1232** is coupled with the optics housing **1202** and extends a distance **1236** between the housing **1202** and the contoured locating pad **1234**. In one embodiment, the spacer **1232** defines a lumen **1238** that extends between the contoured locating pads **1234** and the optics housing **1202**. In some embodiments, the magnitude of the distance **1236** may be selected to increase the certainty of the location of the patient's visual axis. In some embodiments, it is sufficient that the distance **1236** be a relatively fixed distance.

[**0162**] When the alignment apparatus **1200** is used, the patient's head is brought into contact with the contoured locating pad **1234**, which locates the patients eye **10** in the aperture at a fixed distance from the first and second reference targets **1208**, **1210**. Once the patient's head is positioned in the contoured locating pad **1234**, the patient may move the eye **10** as discussed above, to locate the visual axis. After locating the visual axis, the light source **1222** is engaged to emit light toward the eye **10**, e.g., as reflected by the beamsplitter **1224**.

[0163] In the illustrated embodiment, at least some of the light emitted by the light source **1222** is reflected by the beamsplitter **1224** along the instrument axis **1213** toward the patient's eye **10**. Because the visual axis of the eye **10** was previously aligned with the instrument axis **1213**, the light from the light source **1222** reflected by the beamsplitter **1224** is also aligned with the visual axis of the eye **10**.

[0164] The reflected light provides a visual marker of the location of the patient's visual axis. The marking function of the light source **1222** is particularly useful in connection with the methods, described below, of applying a mask. Additional embodiments of ophthalmic instruments embodying this technique are described below in connection with **FIGS. 55-59**.

B. Methods of Applying a Mask

[0165] Having described a method for properly locating the visual axis of the eye **10** a patient and for visually marking the visual axis, various methods for applying a mask to the eye will be discussed.

[0166] **FIG. 52** shows an exemplary process for screening a patient interested in increasing his or her depth of focus. The process begins at step **1300**, in which the patient is fitted with soft contact lenses, i.e., a soft contact lens in placed in each of the patient's eyes. If needed, the soft contact lenses may include vision correction. Next, at step **1310**, the visual axis of each of the patient's eyes is located as described above. At a step **1320**, a mask, such as any of those described above, is placed on the soft contact lenses such that the optical axis of the aperture of the mask is aligned with the visual axis of the eye. In this position, the mask will be located generally concentric with the patient's pupil. In addition, the curvature of the mask should parallel the curvature of the patient's cornea. The process continues at a step **1330**, in which the patient is fitted with a second set of soft contact lenses, i.e., a second soft contact lens is placed over the mask in each of the patient's eyes. The second contact lens holds the mask in a substantially constant position. Last, at step **1340**, the patient's vision is tested. During testing, it is advisable to check the positioning of the mask to ensure that the optical axis of the aperture of the mask is substantially collinear with the visual axis of the eye. Further details of testing are set forth in U.S. Pat. No. 6,554,424, issued Apr. 29, 2003, incorporated by reference herein in its entirety.

[0167] In accordance with a still further embodiment of the invention, a mask is surgically implanted into the eye of a patient interested in increasing his or her depth of focus. For example, a patient may suffer from presbyopia, as discussed above. The mask may be a mask as described herein, similar to those described in the prior art, or a mask combining one or more of these properties. Further, the mask may be configured to correct visual aberrations. To aid the surgeon surgically implanting a mask into a patient's eye, the mask may be pre-rolled or folded for ease of implantation.

[0168] The mask may be implanted in several locations. For example, the mask may be implanted underneath the cornea's epithelium sheet, beneath the cornea's Bowman membrane, in the top layer of the cornea's stroma, or in the cornea's stroma. When the mask is placed underneath the cornea's epithelium sheet, removal of the mask requires little more than removal of the cornea's epithelium sheet.

[0169] **FIGS. 53***a* through **53***c* show a mask **1400** inserted underneath an epithelium sheet **1410**. In this embodiment, the surgeon first removes the epithelium sheet **1410**. For example, as shown in **FIG. 53***a*, the epithelium sheet **1410** may be rolled back. Then, as shown in **FIG. 53***b*, the surgeon creates a depression **1415** in a Bowman's membrane **420** corresponding to the visual axis of the eye. The visual axis of the eye may be located as described above and may be marked by use of the alignment apparatus **1200** or other similar apparatus. The depression **1415** should be of sufficient depth and width to both expose the top layer **1430** of the stroma **1440** and to accommodate the mask **1400**. The mask **1400** is then placed in the depression **1415**. Because the depression **1415** is located in a position to correspond to the visual axis of the patient's eye, the central axis of the pinhole aperture of the mask **1400** will be substantially collinear with the visual axis of the eye. This will provide the greatest improvement in vision possible with the mask **1400**. Last, the epithelium sheet **1410** is placed over the mask **1400**. Over time, as shown in **FIG. 53***c*, the epithelium sheet **1410** will grow and adhere to the top layer **1430** of the stroma **1440**, as well as the mask **1400** depending, of course, on the composition of the mask **1400**. As needed, a contact lens may be placed over the incised cornea to protect the mask.

[0170] **FIGS. 54***a* through **54***c* show a mask **1500** inserted beneath a Bowman's membrane **1520** of an eye. In this embodiment, as shown in **FIG. 54***a*, the surgeon first hinges open the Bowman's membrane **1520**. Then, as shown in **FIG. 54***b*, the surgeon creates a depression **1515** in a top layer **1530** of a stroma **1540** corresponding to the visual axis of the eye. The visual axis of the eye may be located as described above and may be marked by using the alignment apparatus **1200** or other similar apparatus. The depression **1515** should be of sufficient depth and width to accommodate the mask **1500**. Then, the mask **1500** is placed in the depression **1515**. Because the depression **1515** is located in a position to correspond to the visual axis of the patient's eye, the central axis of the pinhole aperture of the mask **1500** will be substantially collinear with the visual axis of the eye. This will provide the greatest improvement in vision possible with the mask **1500**. Last, the Bowman's membrane **1520** is placed over the mask **1500**. Over time, as shown in **FIG. 54***c*, the epithelium sheet **1510** will grow over the incised area of the Bowman's membrane **1520**. As needed, a contact lens may be placed over the incised cornea to protect the mask.

[0171] In another embodiment, a mask of sufficient thinness, i.e., less than substantially 20 microns, may be placed underneath epithelium sheet **1410**. In another embodiment, an optic mark having a thickness less than about 20 microns may be placed beneath Bowman's membrane **1520** without creating a depression in the top layer of the stroma.

[0172] In an alternate method for surgically implanting a mask in the eye of a patient, the mask may be threaded into a channel created in the top layer of the stroma. In this method, a curved channeling tool creates a channel in the top layer of the stroma, the channel being in a plane parallel to the surface of the cornea. The channel is formed in a position corresponding to the visual axis of the eye. The channeling tool either pierces the surface of the cornea or, in the alternative, is inserted via a small superficial radial incision. In the alternative, a laser focusing an ablative beam may

create the channel in the top layer of the stroma. In this embodiment, the mask may be a single segment with a break, or it may be two or more segments. In any event, the mask in this embodiment is positioned in the channel and is thereby located so that the central axis of the pinhole aperture formed by the mask is substantially collinear with the patient's visual axis to provide the greatest improvement in the patient's depth of focus.

[0173] In another alternate method for surgically implanting a mask in the eye of a patient, the mask may be injected into the top layer of the stroma. In this embodiment, an injection tool with a stop penetrates the surface of the cornea to the specified depth. For example, the injection tool may be a ring of needles capable of producing a mask with a single injection. In the alternative, a channel may first be created in the top layer of the stroma in a position corresponding to the visual axis of the patient. Then, the injector tool may inject the mask into the channel. In this embodiment, the mask may be a pigment, or it may be pieces of pigmented material suspended in a bio-compatible medium. The pigment material may be made of a polymer or, in the alternative, made of a suture material. In any event, the mask injected into the channel is thereby positioned so that the central axis of the pinhole aperture formed by the pigment material is substantially collinear with the visual axis of the patient.

[0174] In another method for surgically implanting a mask in the eye of a patient, the mask may be placed beneath the corneal flap created during keratectomy, when the outermost 20% of the cornea is hinged open. As with the implantation methods discussed above, a mask placed beneath the corneal flap created during keratectomy should be substantially aligned with the patient's visual axis, as discussed above, for greatest effect.

[0175] In another method for surgically implanting a mask in the eye of a patient, the mask may be aligned with the patient's visual axis and placed in a pocket created in the cornea's stroma.

[0176] Further details concerning alignment apparatuses are disclosed in U.S. Provisional Application Ser. No. 60/479,129, filed Jun. 17, 2003, incorporated by reference herein in its entirety.

IV. Further Surgical Systems for Aligning a Pinhole Aperture with a Patient's Eye

[0177] **FIG. 55** shows a surgical system **2000** that employs dual target fixation in a manner similar to that discussed above in connection with **FIGS. 43-51**. The surgical system **2000** enables the identification of a unique feature of a patient's eye in connection with a surgical procedure. The surgical system **2000** is similar to the ophthalmic instrument **1200** except as set forth below. As discussed below, in one arrangement, the surgical system **2000** is configured to align an axis of the patient's eye, e.g., the patient's line of sight (sometimes referred to herein as the "visual axis"), with an axis of the system **2000**. The axis of the system **2000** may be a viewing axis along which the patient may direct an eye. As discussed above, such alignment is particularly useful in many surgical procedures, including those that benefit from precise knowledge of the location of one or more structures or features of the eye on which the procedures is being performed.

[0178] In one embodiment, the surgical system **2000** includes a surgical viewing device **2004** and an alignment device **2008**. In one embodiment, the surgical viewing device **2004** includes a surgical microscope. The surgical viewing device **2004** may be any device or combination of devices that enables a surgeon to visualize the surgical site with sufficient clarity or that enhances the surgeon's visualization of the surgical site. A surgeon also may elect to use the alignment device **2004** without a viewing device. As discussed more fully below in connection another embodiment of a surgical system shown in **FIG. 56**, the surgical system **2000** preferably also includes a fixture configured to conveniently mount one or more components to the surgical viewing device **2004**.

[0179] In one embodiment, the alignment device **2008** includes an alignment module **2020**, a marking module **2024**, and an image capture module **2028**. As discussed below, in another embodiment, the marking module **2024** is eliminated. Where the marking module **2024** is eliminated, one or more of its functions may be performed by the image capture module **2028**. In another embodiment, the image capture module **2028** is eliminated. The alignment device **2004** preferably also has a control device **2032** that directs one or more components of the alignment device **2004**. As discussed more fully below, the control device **2032** includes a computer **2036** and signal lines **2040***a*, **2040***b*, and a trigger **2042** in one embodiment.

[0180] The alignment module **2020** includes components that enable a patient to align a feature related to the patient's eye, vision, or sense of sight with an instrument axis, e.g., an axis of the alignment device **2008**. In one embodiment, the alignment module **2020** includes a plurality of targets (e.g., two targets) that are located on the instrument axis. In the illustrated embodiment, the alignment module **2020** includes a first target **2056** and a second target **2060**. The alignment module **2020** may be employed to align the patient's line-of-sight with an axis **2052** that extends perpendicular to the faces of the targets **2056**, **2060**.

[0181] Although the alignment device **2008** could be configured such that the patient is positioned relative thereto so that the eye is positioned along the axis **2052**, it may be more convenient to position the patient such that an eye **2064** of the patient is not on the axis **2052**. For example, as shown in **FIG. 55**, the patient may be positioned a distance **2068** from the axis **2052**. **FIG. 55** shows that the gaze of the patient's eye **2064** is directed generally along a patient viewing axis **2072**.

[0182] In this arrangement, the alignment device **2008** is configured such that the patient viewing axis **2072** is at about a ninety degree angle with respect to the instrument axis **2052**. In this embodiment, a path **2076** optically connecting the targets **2056**, **2060** with the patient's eye **2064** extends partially along the axis **2052** and partially along the patient viewing axis **2072**. The optical path **2076** defines the path along which the images of the targets **2056**, **2060** are cast when the alignment device **2008** is configured such that the patient's eye **2064** is not on the axis **2052**.

[0183] Positioning the patient off of the axis **2052**, may be facilitated by one or more components that redirect light traveling along or parallel to the axis **2052**. In one embodiment, the alignment device **2008** includes a beamsplitter **2080** located on the axis **2052** to direct along the patient

viewing axis **2072** light rays coming toward the beamsplitter **2080** from the direction of the targets **2056**, **2060**. In this embodiment, at least a portion of the optical path **2076** is defined from the patient's eye **2064** to the beamsplitter **2080** and from the beamsplitter **2080** to the first and second targets **2056**, **2060**. Although the alignment device **2008** is configured to enable the patient viewing axis **2072** to be at about a ninety degree angle with respect to the axis **2052**, other angles are possible and may be employed as desired. The arrangement of **FIG. 55** is convenient because it enables a surgeon to be directly above and relatively close to the patient if the patient is positioned on his or her back on an operating table.

[**0184**] In one embodiment, the first target **2056** is on the axis **2052** and on the optical path **2076** between the second target **2060** and the patient's eye **2064**. More particularly, light rays that are directed from the second target **2060** intersect the first target **2056** and are thereafter directed toward the beamsplitter **2080**. As discussed more fully below, the first and second targets **2056**, **2060** are configured to project a suitable pattern toward the patient's eye **2064**. The patient interacts with the projected images of the first and second targets **2056**, **2060** to align the line-of-sight (or other unique anatomical feature) of the patient's eye **2064** or of the patient's sense of vision with an axis of the instrument, such as the axis **2052**, the viewing axis **2072**, or the optical path **2076**.

[**0185**] The first and second targets **2056**, **2060** may take any suitable form. The targets **2056**, **2060** may be similar to those hereinbefore described. The targets **2056**, **2060** may be formed on separate reticles or as part of a single alignment target. In one embodiment, at least one of the first and second targets **2056**, **2060** includes a glass reticle with a pattern formed thereon. The pattern on the first target **2056** and the pattern on the second target **2060** may be linear patterns that are combined to form a third linear pattern when the patient's line-of-sight is aligned with the axis **2052** or optical path **2076**.

[**0186**] Although shown as separate elements, the first and second targets **2056**, **2060** may be formed on a alignment target. **FIGS. 55A-55C** shows one embodiment of an alignment target **2081**. The alignment target **2081** can be formed of glass or another substantially transparent medium. The alignment target **2081** includes a first surface **2082** and a second surface **2083**. The first and second surfaces **2082**, **2083** are separated by a distance **2084**. The distance **2084** is selected to provide sufficient separation between the first and second surfaces **2082**, **2083** to facilitate alignment by the patient by any of the methods described herein. In one embodiment, the alignment target **2081** includes a first pattern **2085** that may comprise a linear pattern formed on the first surface **2082** and a second pattern **2086** that may comprise a linear pattern formed on the second surface **2083**. The first and second patterns **2085**, **2086** are selected so that when the patient's line-of-sight is properly aligned with an axis of the alignment device **2008**, the first and second patterns **2085**, **2086** form a selected pattern (as in **FIG. 55B**) but when the patient's line-of-sight is properly aligned with an axis of the alignment device **2008**, the first and second patterns **2085**, **2086** do not form the selected pattern (as in **FIG. 55C**). In the illustrated embodiment, the first and second pattern **2085**, **2086** each are generally L-shaped. When aligned, the first and second patterns **2085**, **2086** form a cross. When not aligned, a gap is formed between the patterns and they appear as an L and an inverted L. This arrangement advantageously exploits vernier acuity, which is the ability of the eye to keenly detect misalignment of displaced lines. Any other combination of non-linear or linear patterns (e.g., other linear patterns that exploit vernier acuity) can be used as targets, as discussed above.

[**0187**] The first and second targets **2056**, **2060** (or the first and second patterns **2085**, **2086**) may be made visible to the patient's eye **2064** in any suitable manner. For example, a target illuminator **2090** may be provided to make the targets **2056**, **2060** visible to the eye **2064**. In one embodiment, the target illuminator **2090** is a source of radiant energy, such as a light source. The light source can be any suitable light source, such as an incandescent light, a fluorescent light, one or more light emitting diodes, or any other source of light to illuminate the targets **2056**, **2060**.

[**0188**] As discussed more fully below, the alignment module **2020** also may include one or more optic elements, such as lenses, that relatively sharply focus the images projected from the first and second targets **2056**, **2060** to present sharp images to the patient's eye **2064**. In such arrangements, the focal length of the optic element or system of optical elements may be located at any suitable location, e.g., at the first or second targets **2056**, **2060**, between the first and second targets **2056**, **2060** in front of the first target **2056**, or behind the second target **2060**. The focal length is the distance from a location (e.g., the location of an optic element) to the plane at which the optic element focuses the target images projected from the first and second target **2056**, **2060**.

[**0189**] **FIG. 55** shows a series of arrows that indicate the projection of the images of the first and second targets **2056**, **2060** to the patient's eye **2064**. In particular, an arrow **2094** indicates the direction of light cast by the target illuminator **2090** along the axis **2052** toward the first and second targets **2056**, **2060**. The light strikes the first and second targets **2056**, **2060** and is absorbed by or passed through the targets to cast an image of the targets **2056**, **2060** along the axis **2052** in a direction indicated by an arrow **2098**. In the embodiment of **FIG. 55**, the image of the first and second targets **2056**, **2060** intersects a beamsplitter **2102** that forms a part of the marking module **2024** and the image capture module **2028**. The beamsplitter **2102** is configured to transmit the majority of the light conveying the images of the first and second targets **2056**, **2060** toward the beamsplitter **2080** as indicated by an arrow **2106**. The beamsplitter **2102** will be discussed in greater detail below. The light is thereafter reflected by the beamsplitter **2080** along the patient viewing axis **2072** and toward the patient's eye **2064**. As discussed more fully below, in some embodiments, the beamsplitter **2080** transmits some of the incident light beyond the beamsplitter **2080** along the axis **2050**. In one embodiment, 70 percent of the light incident on the beamsplitter **2080** is reflected toward the patient's eye **2064** and 30 percent is transmitter. One skilled in the art will recognize that the beamsplitter **2080** can be configured to transmit and reflect in any suitable fraction.

[**0190**] While the target illuminator **2090** and the first and second targets **2056**, **2060** project the images of the targets to the patient's eye **2064**, the patient may interact with those images to align a feature of the patient's eye **2064** with an

axis of the alignment device **2008**. In the embodiment illustrated by **FIG. 55**, the patient aligns the line-of-sight of the eye **2064** with the patient viewing axis **2072** of the alignment device **2008**.

[**0191**] Techniques for aligning the line of sight of the patient's eye **2064** with the instrument axis have been discussed above. In the context of the embodiment of **FIG. 55**, the patient is positioned such that the optical path **2076** intersects the patient's eye **2064**. In one method, the patient is instructed to focus on the first target **2056**. Motion is provided between the patient's eye **2064** and the optical path **2076** (and therefore between the patient's eye **2064** and the targets **2056**, **2060**). The relative motion between the patient's eye **2064** and the targets **2056**, **2060** may be provided by the patient moving his or her head with respect to the patient viewing axis **2072**. Alternatively, the patient may be enabled to move all or a portion of the surgical system **2000** while the patient remains stationary. As discussed above, when the first and second targets **2056**, **2060** appear aligned (e.g., the L patterns **2085**, **2086** merge to form a cross), the line-of-sight of the patient is aligned with the patient viewing axis **2072**, the optical path **2076**, and the axis **2052** of the alignment module **2020**.

[**0192**] Although aligning the eye may be sufficient to provide relatively precise placement of the masks described herein, one or both of the marking module **2024** and the image capture module **2028** may be included to assist the surgeon in placing a mask after the eye **2064** has been aligned. At least one of the marking module **2024** and the image capture module **2028** may be used to correlate the line-of-sight of the patient's eye **2064**, which is not otherwise visible, with a visual cue, such as a visible physical feature of the patient's eye, a marker projected onto the eye or an image of the eye, or a virtual image of a marker visible to the surgeon, or any combination of the foregoing. As is discussed in more detail below, the virtual image may be an image that is directed toward the surgeon's eye that appears from the surgeon's point of view to be on the eye **2064** at a pre-selected location.

[**0193**] In one embodiment, the marking module **2024** is configured to produce an image, sometimes referred to herein as a "marking image", that is visible to the surgeon and that is assists the surgeon in placing a mask or performing another surgical procedure after the line of sight of the eye **2064** has been located. The marking module **2024** of the alignment device **2008** shown includes a marking target **2120** and a marking target illuminator **2124**. The marking target illuminator **2124** preferably is a source of light, such as any of those discussed above in connection with the target illuminator **2090**.

[**0194**] **FIG. 55** shows that in one embodiment, the marking target **2120** is a structure configured to produce a marking image when light is projected onto the marking target **2120**. The marking target **2120** may be similar to the targets **2056**, **2060**. In some embodiments, the marking target **2120** is a glass reticle with a suitable geometrical pattern formed thereon. The pattern formed on the marking target **2120** may be a clear two dimensional shape that is surrounded by one or more opaque regions. For example, a clear annulus of selected width surrounded by opaque regions could be provided. In another embodiment, the marking target **2120** may be a glass reticle with an opaque two dimensional shape surrounded by substantially clear regions. As discussed below, in other embodiments, the marking target **2120** need not be made of glass and need not have a fixed pattern. The marking target **2120** may be located in any suitable location with respect to the beamsplitter **2080** or the alignment device **2008** as discussed below.

[**0195**] **FIG. 55** shows that in one embodiment, the marking image is generated in a manner similar to the manner in which the images of the first and second targets **2056**, **2060** are generated. In particular, the marking target **2124** and the marking target illuminator **2124** cooperate to produce, generate, or project the marking image along a marking image axis **2128**. The marking image is conveyed by light along the axis **2128**. The marking target illuminator **2124** casts light toward the marking target **2120** in a direction indicated by an arrow **2132**. The marking target **2120** interacts with the light cast by the marking target illuminator **2124**, e.g., by at least one of transmitting, absorbing, filtering, and attenuating at least a portion of the light. An arrow **2136** indicates the direction along which the marking image generated by the interaction of the marking target illuminator **2124** and the marking target **2120** is conveyed. The marking image preferably is conveyed along the marking axis **2128**. In the illustrated embodiment, the marking target **2120** is located off of the axis **2052** and the image of the marking target initially is cast in a direction generally perpendicular to the axis **2052**.

[**0196**] A beamsplitter **2140**, to be discussed below in connection with the image capture module **2028**, is positioned on the marking axis **2128** in the embodiment of **FIG. 55**. However, the beamsplitter **2140** is configured to be substantially transparent to light being transmitted along the marking axis **2128** from the direction of the marking target **2120**. Thus, the light conveying the marking image is substantially entirely transmitted beyond the beamsplitter **2140** along the marking axis **2128** toward the axis **2052** as indicated by an arrow **2144**. Thus, the beamsplitter **2140** generally does not affect the marking image. A surface of the beamsplitter **2102** that faces the marking target **2120** is reflective to light. Thus, the light conveying the marking image is reflected and thereafter is conveyed along the axis **2052** as indicated by the arrow **2106**. The surface of the beamsplitter **2080** that faces the beamsplitter **2102** also is reflective to at least some light (e.g., 70 percent of the incident light, as discussed above). Thus, the light conveying the marking image is reflected and thereafter is conveyed along the patient viewing axis **2072** toward the patient's eye **2064** as indicated by the arrow **2148**. Thus, a marking image projected from the marking target **2120** may be projected onto the patient's eye **2064**.

[**0197**] As discussed more fully below, projecting the marking image onto the patient's eye **2064** may assist the surgeon in accurately placing a mask. For example, the surgeon may be assisted in that the location of line-of-sight of the patient's eye (or some other generally invisible feature of the eye **2064**) is correlated with a visible feature of the eye, such as the iris or other anatomical feature. In one technique, the marking image is a substantially circular ring that has a diameter that is greater than the size of the inner periphery of the iris under surgical conditions (e.g., the prevailing light and the state of dilation of the patient's eye **2064**). In another technique, the marking image is a sub-

stantially circular ring that has a diameter that is less than the size of the outer periphery of the iris under surgical conditions (e.g., light and dilation of the eye **2064**). In another technique, the marking image is a substantially circular ring that has a size that is correlated to another feature of the eye **2064**, e.g., the limbus of the eye.

[**0198**] In one embodiment of the system **2000**, a marking module is provided that includes a secondary marking module. The secondary marking module is not routed through the optics of associated with the alignment device **2008**. Rather, the secondary marking module is coupled with the alignment device **2008**. In one embodiment, the secondary marking module includes a source of radiant energy, e.g., a laser or light source similar to any of these discussed herein. The source of radiant energy is configured to direct a plurality of spots (e.g., two, three, four, or more than four spots) onto the patient's eye **2064**. The spots preferably are small, bright spots. The spots indicate positions on the eye **2064** that correlate with a feature of a mask, such as an edge of a mask, when the mask is in the correct position with respect to the line-of-sight of the eye **2064**. The spots can be aligned with the projected marking target such that they hit at a selected location on the projected marking target (e.g., circumferentially spaced locations on the inner edge, on the outer edge, or on both the inner and outer edges). Thus, the marking module may give a visual cue as to the proper positioning of a mask that is correlated to the location of the line-of-sight without passing through the optics of the alignment device. The visual cue of the secondary marking module may be coordinated with the marking image of the marking module **2024** in some embodiments.

[**0199**] In some techniques, it may be beneficial to increase the visibility of a visual cue generated for the benefit of the surgeon (e.g., the reflection of the image of the marking target **2120**) on the eye **2064**. In some cases, this is due to the generally poor reflection of marking images off of the cornea. Where reflection of the marking image off of the cornea is poor, the reflection of the image may be quite dim. In addition, the cornea is an off-center aspherical structure, so the corneal reflection (purkinje images) may be offset from the location of the intersection of the visual axis and the corneal surface as viewed by the surgeon.

[**0200**] One technique for increasing the visibility of a visual cue involves applying a substance to the eye that can react with the projected image of the marking target **2120**. For example, a dye, such as fluorescein dye, can be applied to the surface of the eye. Then the marking target illuminator **2124** may be activated to cause an image of the marking target **2120** to be projected onto the eye, as discussed above. In one embodiment, the marking target illuminator **2124** is configured to project light from all or a discrete portion of the visible spectrum of electromagnetic radiant energy, e.g., the wavelengths corresponding to blue light, to project the image of the marking target **2120** onto the eye **2064**. The projected image interacts with the dye and causes the image of the marking target **2120** to be illuminated on the surface of the cornea. The presence of the dye greatly increases the visibility of the image of the marking target. For example, where the marking target **2120** is a ring, a bright ring will be visible to the surgeon because the light causes the dye to fluoresce. This technique substantially eliminates errors in placement of a mask due to the presence of the purkinje images and may generally increase the brightness of the image of the marking target **2120**.

[**0201**] Another technique for increasing the visibility of a visual cue on the eye involves applying a visual cue enhancing device to at least a portion of the anterior surface of the eye **2064**. For example, in one technique, a drape is placed over the cornea. The drape may have any suitable configuration. For example, the drape may be a relatively thin structure that will substantially conform to the anterior structure of the eye. The drape may be formed in a manner similar to the formation of a conventional contact lens. In one technique, the drape is a contact lens. The visual cue enhancing device preferably has suitable reflecting properties. In one embodiment, the visual cue enhancing device diffusely reflects the light projecting the image of the marking target **2120** onto the cornea. In one embodiment, the visual cue enhancing device is configured to interact with a discrete portion of the visible spectrum of electromagnetic radiant energy, e.g., the wavelengths thereof corresponding to blue light.

[**0202**] As discussed above the alignment device **2008** shown in **FIG. 55** also includes an image capture module **2028**. Some variations do not include the image capture module **2028**. The image capture module **2028** of the surgical system **2000** is capable of capturing one or more images of the patient's eye **2064** to assist the surgeon in performing surgical procedures on the eye **2064**. The image capture module **2028** preferably includes a device to capture an image, such as a camera **2200** and a display device **2204** to display an image. The display device **2204** may be a liquid crystal display. The image capture module **2028** may be controlled in part by the control device **2032** of the surgical system **2000**. For example, the computer **2036** may be employed to process images captured by the camera **2200** and to convey an image to the display device **2204** where it is made visible to the surgeon. The computer **2036** may also direct the operation of or be responsive to at least one of the camera **2200**, the display device **2204**, the trigger **2042**, and any other component of the image capture module **2028**.

[**0203**] The camera **2200** can be any suitable camera. One type of camera that can be used is a charge-coupled device camera, referred to herein as a CCD camera. One type of CCD camera incorporates a silicon chip, the surface of which includes light-sensitive pixels. When light, e.g., a photon or light particle, hits a pixel, an electric charge is registered at the pixels that can be detected. Images of sufficient resolution can be generated with a large array of sensitive pixels. As discussed more fully below, one advantageous embodiment provides precise alignment of a selected pixel (e.g., one in the exact geometric center of the display device **2204**) with the axis **2052**. When such alignment is provided, the marking module may not be needed to align a mask with the line-of-sight of the eye **2064**.

[**0204**] As discussed above, an image captured by the camera **2200** aids the surgeon attempting to align a mask, such as any of the masks described herein, with the eye **2064**. In one arrangement, the image capture module **2028** is configured to capture an image of one or more physical attributes of the eye **2064**, the location of which may be adequately correlated to the line-of-sight of the eye **2064**. For example, the image of the patient's iris may be directed along the patient viewing axis **2072** to the beamsplitter **2080**

as indicated by the arrow **2148**. As mentioned above, a side of the beamsplitter **2080** that faces the beamsplitter **2080** is reflective to light transmitted from the eye **2064**. Thus, at least a substantial portion of the light conveying the image of the iris of the eye **2064** is reflected by the beamsplitter **2080** and is conveyed along the axis **2052** toward the beamsplitter **2102**, as indicated by the arrow **2106**. As discussed above, the surface of the beamsplitter **2102** facing the beamsplitter **2080** is reflective to light. Thus, substantially all of the light conveying the image of the iris is reflected by the beamsplitter **2102** and is conveyed along the marking axis **2128** toward the beamsplitter **2140**, as indicated by the arrow **2144**. The surface of the beamsplitter **2140** facing the beamsplitter **2102** and the camera **2200** is reflective to light. Thus, substantially all of the light conveying the image of the iris is reflected along an image capture axis **2212** that extends between the beamsplitter **2140** and the camera **2200**. The light is conveyed along an image capture axis **2212** as indicated by an arrow **2216**.

[**0205**] The image captured by the camera **2200** is conveyed to the computer **2036** by way of a signal line **2040***a*. The computer **2036** processes the signal in a suitable manner and generates signals to be conveyed along a signal line **2040***b* to the display device **2204**. Any suitable signal line and computer or other signal processing device can be used to convey signals from the camera **2200** to the display device **2204**. The signal lines **2040***a*, **2040***b* need not be physical lines. For example, any suitable wireless technology may be used in combination with or in place of physical lines or wires.

[**0206**] The capturing of the image by the camera **2200** may be triggered in any suitable way. For example, the trigger **2042** may be configured to be manually actuated. In one embodiment, the trigger **2042** is configured to be actuated by the patient when his or her eye **2064** is aligned (e.g., when the targets **2056**, **2060** are aligned, as discussed above). By enabling the patient to trigger the capturing of the image of the eye **2064** by the image capture module **2028**, the likelihood of the eye **2064** moving prior to the capturing of the image is greatly reduced. In another embodiment, another person participating in the procedure may be permitted to trigger the capturing of the image, e.g., on the patient's cue. In another embodiment, the control device **2032** may be configured to automatically capture the image of the patient's eye **2064** based on a predetermined criteria.

[**0207**] The display device **2204** is configured to be illuminated to direct an image along the axis **2052** toward the beamsplitter **2080** as indicated by an arrow **2208**. The surface of the beamsplitter **2080** that faces the display device **2204** preferably is reflective to light directed from the location of the beamsplitter **2080**. Thus, the image on the display **2052** is reflected by the beamsplitter **2080** toward an eye **2212** of the surgeon as indicated by an arrow **2216**. The beamsplitter **2080** preferably is transparent from the perspective of the surgeon's eye **2212**. Thus, the surgeon may simultaneously view the patient's eye **2064** and the image on the display device **2204** in one embodiment. In one embodiment where both the marking module **2024** and the image capture module **2028** are present, the marking image may be projected at the same time that an image is displayed on the display device **2204**. The marking image and the image on the display will appear to both be on the patient's eye. In one arrangement, they have the same configuration (e.g., size and shape) and therefore overlap. This can reinforce the image from the perspective of the surgeon, further increasing the visibility of the visual cue provided by the marking image.

[**0208**] The display device **2204** is located at a distance **2220** from the beamsplitter **2080**. The patient is located a distance **2224** from the axis **2052**. Preferably the distance **2220** is about equal to the distance **2224**. Thus, both the display device **2204** and the patient's eye **2064** are at the focal length of the surgical viewing device **2004**. This assures that the image generated by the display device **2204** is in focus at the same time that the patient's eye is in focus.

[**0209**] In one embodiment, the system **2000** is configured to track movement of the patient's eye **2064** during the procedure. In one configuration, the trigger **2042** is actuated by the patient when the eye **2064** is aligned with an axis of the alignment device **2008**. Although a mask is implanted shortly thereafter, the patient's eye is not constrained and may thereafter move to some extent. In order to correct for such movement, the image capture module **2028** may be configured to respond to such movements by moving the image formed on the display device **2204**. For example, a ring may be formed on the display device **2204** that is similar to those discussed above in connection with the marking target **2120**. The beamsplitter **2080** enables the surgeon to see the ring visually overlaid on the patient's eye **2064**. The image capture module **2028** compares the real-time position of the patient's eye **2064** with the image of the eye captured when the trigger **2042** is actuated. Differences in the real-time position and the position captured by the camera **2200** are determined. The position of the ring is moved an amount corresponding to the differences in position. As a result, from the perspective of the surgeon, movements of the ring and the eye correspond and the ring continues to indicate the correct position to place a mask.

[**0210**] As discussed above, several variations of the system **2000** are contemplated. A first variation is substantially identical to the embodiment shown in **FIG. 55**, except as set forth below. In the first variation, the video capture module **2028** is eliminated. This embodiment is similar to that set forth above in connection with **FIG. 51**. In the arrangement of **FIG. 55**, the marking module **2024** is configured to project the marking target onto the surface of the patient's eye. This variation is advantageous in that it has a relatively simple construction. Also, this variation projects the marking image onto the surface of the cornea, proximate the surgical location.

[**0211**] In one implementation of the first variation, the marking module **2024** is configured to display the marking image to the surgeon's eye **2212** but not to the patient's eye **2064**. This may be provided by positioning the marking target **2120** approximately in the location of the display device **2204**. The marking image may be generated and presented to the surgeon in any suitable manner. For example, the marking target **2120** and marking target illuminator **2124** may be repositioned so that they project the image of the marking target **2120** as indicated by the arrows **2208**, **2216**. The marking target **2120** and the marking target illuminator **2124** may be replaced by a unitary display, such as an LCD display. This implementation of the first variation is advantageous in that the marking image is visible to the

surgeon but is not visible to the patient. The patient is freed from having to respond to or being subject to the marking image. This can increase alignment performance by increasing patient comfort and decreasing distractions, thereby enabling the patient to remain still during the procedure.

[0212] In another implementation of the first variation, a dual marking image is presented to the eye **2212** of the surgeon. In one form, this implementation has a marking module **2024** similar to that shown in **FIG. 55** and discussed above, except as set forth below. A virtual image is presented to the surgeon's eye **2212**. In one form, a virtual image generation surface is positioned in substantially the same location as the display device **2204**. The surface may be a mirror, another reflective surface, or a non-reflective surface. In one embodiment, the display device **2204** is a white card. A first fraction of the light conveying the marking image is reflected by the beamsplitter **2080** to the patient's eye **2064**. The marking image is thus formed on the patient's eye. A second fraction of the light conveying the marking image is transmitted to the virtual image generation surface. The marking image is formed on or reflected by the virtual image generation surface. The marking target thus also is visible to the surgeon's eye **2212** in the form of a virtual image of the target. The virtual image and the marking image formed on the patient's eye are both visible to the surgeon. This implementation of the first variation is advantageous in that the virtual image and the marking image of the marking target are visible to the surgeon's eye **2212** and are reinforced each other making the marking image highly visible to the surgeon.

[0213] In a second variation, the marking module **2024** is eliminated. In this embodiment, the image capture module **2028** provides a visual cue for the surgeon to assist in the placement of a mask. In particular, an image can be displayed on the display device **2204**, as discussed above. The image can be generated in response to the patient actuating the trigger **2042**. In one technique, the patient actuates the trigger when the targets **2056**, **2060** appear aligned, as discussed above. In this variation, care should be taken to determine the position of the display device **2204** in the alignment device because the image formed on the display device **2204** is to give the surgeon a visual cue indicating the location of the line-of-sight of the patient. In one embodiment, the display device **2204** is carefully coupled with the alignment module so that the axis **2052** extends through a known portion (e.g., a known pixel) thereof. Because the precise location of the axis **2052** on the display device **2204** is known, the relationship of the image formed thereon to the line-of-sight of the patient is known.

[0214] **FIG. 56** shows a portion of a surgical system **2400** that is similar to the surgical system **2000** discussed above except as set forth below. The surgical system **2400** may be modified according to any of the variations and embodiments hereinbefore described.

[0215] The portion of the surgical system **2400** is shown from the surgeon's viewpoint in **FIG. 56**. The surgical system **2400** includes an alignment device **2404** and a fixture **2408**. The alignment device **2404** is similar to the alignment device **2008** discussed above, except as set forth below. The surgical system **2400** is shown without a surgical microscope or other viewing device, but is configured to be coupled with one by way of the fixture **2408**.

[0216] The fixture **2408** may take any suitable form. In the illustrated embodiment, the fixture **2408** includes a clamp **2412**, an elevation adjustment mechanism **2416**, and suitable members to interconnect the clamp **2408** and the mechanism **2416**. In the embodiment of **FIG. 56**, the clamp **2412** is a ring clamp that includes a first side portion **2420**, a second side portion **2424**, and a clamping mechanism **2426** to actuate the first and second side portion **2420**, **2424** with respect to each other. The first side portion **2420** has a first arcuate inner surface **2428** and the second side portion **2424** has a second arcuate inner surface **2432** that faces the first arcuate inner surface **2428**. The clamping mechanism **2426** is coupled with each of the first and second side portions **2420**, **2424** to cause the first and second arcuate inner surfaces **2428**, **2432** to move toward or away from each other. As the first and second arcuate inner surfaces **2428**, **2432** move toward each other they apply a force to a structure, such as a portion of a surgical microscope, placed between the first and second arcuate inner surfaces **2428**, **2432**. In one embodiment, the force applied by the first and second arcuate inner surfaces **2428**, **2432** is sufficient to clamp the alignment device **2404** with respect to a surgical viewing aid. In one embodiment, the clamp **2412** is configured to couple with any one of (or more than one of) the currently commercially available surgical microscopes.

[0217] The fixture **2408** preferably also is configured to suspend the alignment device **2404** at an elevation below the clamp **2412**. In the illustrated embodiment, a bracket **2440** is coupled with the clamp **2412**, which is an L-shaped bracket in the illustrated embodiment with a portion of the L extending downward from the clamp **2412**. **FIG. 56** shows the L-shaped bracket spaced laterally from the clamp **2412** by a spacer **2444**. In one embodiment, the bracket **2440** is pivotably coupled with the spacer **2444** so that the alignment device **2404** can be easily rotated out of the field of view of the surgical microscope or viewing aid, which is visible through the spaced defined between the surfaces **2428**, **2432**.

[0218] Preferably the fixture **2408** is also configured to enable the alignment device **2404** to be positioned at a selected elevation within a range of elevations beneath the clamp **2412**. The elevation of the alignment device **2404** may be easily and quickly adjusted by manipulating a suitable mechanism. For example, manual actuation may be employed by providing a knob **2460** coupled with a rack-and-pinion gear coupling **2464**. Of course the rack-and-pinion gear coupling **2464** can be actuated by another manual device that is more remote, such as by a foot pedal or trigger or by an automated device.

[0219] **FIGS. 57-59** show further details of the alignment device **2404**. The alignment device **2404** is operatively coupled with an illuminator control device **2500** and includes an alignment module **2504**, a marking module **2508**, and an image routing module **2512**. As discussed below, the illuminator control device **2500** controls light or energy sources associated with the alignment control device **2404**. In some embodiments, the illuminator control device **2500** forms a part of a computer or other signal processing device, similar to the computer **2036** discussed above.

[0220] The alignment module **2504** is similar to the alignment module **2020** except as set forth below. The alignment module **2504** includes a housing **2520** that extends between a first end **2524** and a second end **2528**. The first end **2524**

of the housing **2520** is coupled with the image routing module **2512** and interacts with the image routing module **2512** in a manner described below. The housing **2520** includes a rigid body **2532** that preferably is hollow. An axis **2536** extends within the hollow portion of the housing **2520** between the first and second ends **2524**, **2528**. In the illustrated embodiment, the second end **2528** of the housing **2520** is enclosed by an end plate **2540**.

[**0221**] The housing **2520** is configured to protect a variety of components that are positioned in the hollow spaced defined therein. In one embodiment, a target illuminator **2560** is positioned inside the housing **2520** near the second end **2528** thereof. A power cable **2564** (or other electrical conveyance) that extends from the end plate **2540** electrically connects the target illuminator **2560** to a power source. The target illuminator **2560** could also be triggered and powered by a wireless connection. In one arrangement, the power source forms a portion of the illuminator control device **2500** to which the power cable **2564** is connected. Power may be from any suitable power source, e.g., from a battery or electrical outlet of suitable voltage.

[**0222**] As discussed above, the illuminator control device **2500** enables the surgeon (or other person assisting in a procedure) to control the amount of energy supplied to the target illuminator **2560** in the alignment module **2504**. In one embodiment, the illuminator control device **2500** has a brightness control so that the brightness of the target illumination **2560** can be adjusted. The brightness control may be actuated in a suitable manner, such as by a brightness control knob **2568**. The brightness control may take any other suitable form to provide manual analog (e.g., continuous) adjustment of the amount of energy applied to the target illuminator **2560** or to provide manual digital (e.g., discrete) adjustment of the amount of energy applied to the target illuminator **2560**. In some embodiments, the brightness control may be adjustable automatically, e.g., under computer control. The illuminator control device **2500** may also have an on-off switch **2572** configured to selectively apply and cut off power to the target illuminator **2560**. The on-off switch **2572** may be operated manually, automatically, or in a partially manual and partially automatic mode. The brightness control and on-off switch could be controlled wirelessly in another embodiment.

[**0223**] Also located in the housing **2520** are a first target **2592**, a second target **2596**, and a lens **2600**. As discussed above, the first and second targets **2592**, **2596** are configured to present a composite image to the patient's eye such that the patient may align the line-of-sight of the eye with an axis (e.g., the axis **2536**) of the alignment module **2504**. The first and second targets **2592**, **2596** are similar to the targets discussed above. In particular, the alignment target **2081**, which includes two targets on opposite ends of a single component, may be positioned within the housing **2520**.

[**0224**] The lens **2600** may be any suitable lens. Preferably the lens **2600** is configured to sharply focus one or both of the images of the first and second targets **2592**, **2596** in a manner similar to the focus of the targets **2056**, **2060**, discussed above.

[**0225**] In one embodiment, the alignment module **2504** is configured such that the position of the first and second targets **2592**, **2596** within the housing **2520** can be adjusted. The adjustability of the first and second targets **2592**, **2596** may be provided with any suitable arrangement. **FIGS. 57-58** shows that in one embodiment the alignment module **2504** includes a target adjustment device **2612** to provide rapid gross adjustment and fine adjustment of the positions of the targets **2592**, **2596** within the housing **2520**.

[**0226**] In one embodiment, the target adjustment device **2612** includes a support member **2616** that extends along at least a portion of the housing **2520** between the first end **2524** and the second end **2528**. In one embodiment, the support member **2616** is coupled with the end plate **2540** and with the image routing module **2512**. In one embodiment, the target adjustment device **2612** includes a lens fixture **2620** that is coupled with the lens **2600** and a target fixture **2624** that is coupled with the first and second targets **2592**, **2596**. In another embodiment, each of the first and second targets **2592**, **2596** is coupled with a separate target fixture so that the targets may be individually positioned and adjusted. The lens **2600** may be adjustable as shown, or in a fixed position. Movement of the lens and the target **2592**, **2696** enable the patterns on the targets **2592**, **2596** to be brought into focus from the patient of view.

[**0227**] In one arrangement, the support member **2616** is a threaded rod and each of the first and second target fixtures **2620**, **2624** has a corresponding threaded through hole to receive the threaded support member **2616**. Preferably an adjustment device, such as a knob **2628** is coupled with the threaded support member **2616** so that the support member **2616** may be rotated. The knob **2628** may be knurled to make it easier to grasp and rotate. Rotation of the support member **2616** causes the first and second target fixtures **2620**, **2624** to translate on the support member **2616** along the outside of the housing **2520**. The movement of the first and second target fixtures **2620**, **2624** provides a corresponding movement of the first and second targets **2592**, **2596** within the housing **2520**.

[**0228**] In one embodiment a quick release mechanism **2640** is provided to enable the first and second target fixtures **2620**, **2624** selectively to clamp and to release the support member **2616**. The quick release mechanism **2640** can be a spring loaded clamp that causes the through holes formed in the first and second target fixtures **2620**, **2624** to open to create a gap through which the support member **2616** can pass. When the first and second target fixtures **2620**, **2624** are removed from the support member **2616**, the can be quickly moved to another position on the support member **2616**. After rapid repositioning, fine positioning of the first and second target fixtures **2620**, **2624** may be achieved with by turning the support member **2616**.

[**0229**] As discussed above, the alignment device **2404** also includes a marking module **2508** that is similar to the marking module **2024** described above, except as set forth below. The marking module includes a housing **2642** that is generally rigid and that defines a hollow space within the housing. The housing **2642** includes a first end **2644** that is coupled with the image routing module **2512** and a second end **2648** that is closed by an end plate **2652**. In one embodiment, the housing **2642** includes a first portion **2656** and a second portion **2660**. The first and second portions **2656**, **2660** preferably are configured to be disengaged from each other so that components located in the hollow space defined in the housing **2642** to be accessed. Such rapid access facilitates servicing and reconfiguring of the compo-

nents located in the housing **2642**. The first portion **2656** extends between the first end **2644** and a midpoint of the housing **2642**. The second portion **2660** extends between the first portion **2656** and the second end **2648** of the housing **2642**. In one embodiment, the first portion **2656** has a male member with external threads and the second portion **2660** has a female member with internal thread such that the first and second portions **2656**, **2660** may be engaged with and disengaged from each other by way of the threads.

[**0230**] As discussed above, the housing **2642** provides a space in which one or more components may be positioned. In the illustrated embodiment, the housing **2642** encloses a marking target illuminator **2680** and a marking target **2684**.

[**0231**] The marking target illuminator **2680** may be a suitable source of radiant energy, e.g., a light source, such as an incandescent light, a fluorescent light, a light-emitting diode, or other source of radiant energy. As with the target illuminators discussed above, the marking target illuminator **2680** may include or be coupled with suitable optical components to process the light generated thereby in a useful manner, e.g., by providing one or more filters to modify the light, e.g., by allowing a subset of the spectrum of light energy emitted by the light source (e.g., one or more bands of the electromagnetic spectrum) to be transmitted toward the marking target **2684**.

[**0232**] In the illustrated embodiment, the marking target illuminator **2680** is located near the end plate **2652**. A power cable **2688** (or other electrical conveyance) that extends from the end plate **2652** electrically connects the marking target illuminator **2680** to a power source. In one arrangement, the power source forms a portion of the illuminator control device **2500** to which the power cable **2688** is connected. Power may be from any suitable power source, e.g., from a battery or electrical outlet of suitable voltage.

[**0233**] As discussed above, the illuminator control device **2500** enables the surgeon (or other person assisting in a procedure) to control the amount of energy supplied to the target illuminator **2680** in the marking module **2508**. The illuminator control device **2500** has a brightness control so that the brightness of the marking target illumination **2680** can be adjusted. The brightness control may be actuated in a suitable manner, such as by a brightness control knob **2692**. The brightness control may be similar to that discussed above in connection with the brightness control of the target illuminator **2560**. The illuminator control device **2500** may also have an on-off switch **2696** configured to selectively apply and cut off power to the marking target illuminator **2680**. The on-off switch **2696** may be operated manually, automatically, or in a partially manual and partially automatic mode. Any of the power supply, the brightness control, and the on-off switch may be implemented wirelessly in various other embodiments.

[**0234**] In one embodiment, the marking target **2684** is a reticle, e.g., made of glass, with an annular shape formed thereon. For example, the annular shape formed on the marking target **2684** may be a substantially clear annulus surrounded by opaque regions. In this configuration, light directed toward the marking target **2684** interacts with the marking target **2684** to produce and annular image. In another embodiment, the marking target **2684** may be a substantially clear reticle with an opaque shape, such as an opaque annular shape. The annular image is directed into the image routing device **2684**, as discussed further below. The marking target **2684** may be housed in a fixture **2718** that is removable, e.g., when the first portion **2656** and the second portion **2660** of the housing **2642** are decoupled. The first portion **2656** of the housing **2642** is configured to engage the fixture **2718** to relatively precisely position the marking target **2684** with respect to an axis of the housing **2642**.

[**0235**] **FIG. 59** shows the image routing module **2512** in greater detail. The image routing module **2512** is primarily useful for routing light that conveys the target and marking images to an eye of a patient. The image routing module **2512** provides flexibility in the positioning of the various components of the alignment device **2404**. For example, the image routing module **2512** enables the housing **2520** and the housing **2556** to be generally in the same plane and positioned generally parallel to each other. This provides a relatively compact arrangement for the alignment device **2404**, which is advantageous in the surgical setting because, as discussed above, it is desirable for the surgeon to be as close to the surgical site as possible. In addition, the compact arrangement of the alignment device **2404** minimizes or at least reduces the extent to which the alignment device **2404** interferes with free movement of the surgeon and others assisting the surgeon.

[**0236**] **FIGS. 58 and 59** shows that the image routing module **2512** includes a housing **2720** that is coupled with the first end **2524** and the housing **2520** and with the first end **2644** of the housing **2642**. A space defined within the housing **2720** houses a first optic device **2728** and a second optic device **2732**. The first optic device **2728** has a reflective surface that faces the marking target **2684** and is configured to reflect light conveying an image of the marking target **2684** toward the second optic device **2732**. The first optic device **2728** may be a mirror. The second optic device **2732** has a surface **2736** that faces the first optic device **2728** and is reflective to light from the first optic device **2728**. The second optic device **2732** thus reflects light that is directed toward it by the first optic device **2728**.

[**0237**] The image routing module **2512** also may include a third optic device **2740** and a frame **2744** coupled with the housing **2720**. The frame **2744** is configured to position and orient the third optic device **2740** with respect to the housing **2720**. In one embodiment, the third optic device **2740** is a beamsplitter and the frame **2744** holds the third optic device **2740** at about a forty-five degree angle with respect to the axis **2520**. In this position, the third optic device **2740** interacts with light reflected by the first surface **2736** of the second optic device **2732**. The third optic device **2740** may operate in a manner similar to the beamsplitter **2080** of **FIG. 55**.

[**0238**] The second optic device **2732** is configured to be transparent to substantially all of the light conveying an image along the axis **2536** such that the image conveyed along the axis **2536** may be directed to the third optic device **2740** and thereafter to an eye of a surgeon, as discussed about in connection with **FIG. 55**.

[**0239**] Although the image routing device is shown with first, second, and third optic devices **2728**, **2732**, **2740** to route light conveying images in a particular manner, one skilled in the art will recognize that the image routing device **2512** could have more or fewer optic devices that route the image, depending on the desired geometry and compactness of the alignment device **2404**.

[0240] A variation of the alignment device **2404** provides a marking module with a secondary marking module not routed through the optics of the alignment device **2404**. In one embodiment, the secondary marking module includes a source of radiant energy, e.g., a laser or other light source. The source of radiant energy is configured to direct a plurality of spots (e.g., three, four, or more than four spots) onto the patient's eye. The spots indicate positions on the eye that correlate with an edge of a mask when the mask is in the correct position with respect to the line-of-sight of the eye **2064**. The spots can be aligned with the projected marking target such that they hit at a selected location on the projected marking target (e.g., circumferentially spaced locations on the inner edge, on the outer edge, or on both the inner and outer edges). At least a portion of the secondary marking module is coupled with the frame **2744** in one embodiment. A laser of the secondary marking module could be attached to the frame **2744** and suspended therefrom, oriented downward toward the patient's eye. As discussed above, this arrangement provides a secondary device for marking the proper location of a mask with respect to a patient's line of sight after the line of sight has been identified.

[0241] Although various exemplary embodiments of apparatuses and methods for aligning a patient's line-of-sight with an axis of an instrument in connection with the application of a mask have been discussed hereinabove, it should be apparent to those skilled in the art that various changes and modifications can be made which will achieve at least some of the advantages of the invention without departing from, the true scope of the invention. These and other obvious modifications are intended to be covered by the appended claims.

V. Masks Configured to Reduce the Visibility of Diffraction Patterns

[0242] Many of the foregoing masks can be used to improve the depth of focus of a patient. Various additional mask embodiments are discussed below. Some of the embodiments described below include nutrient transport structures that are configured to enhance or maintain nutrient flow between adjacent tissues by facilitating transport of nutrients across the mask. The nutrient transport structures of some of the embodiments described below are configured to at least substantially prevent nutrient depletion in adjacent tissues. The nutrient transport structures can decrease negative effects due to the presence of the mask in adjacent corneal layers when the mask is implanted in the cornea, increasing the longevity of the masks. The inventors have discovered that certain arrangements of nutrient transport structures generate diffraction patterns that interfere with the vision improving effect of the masks described herein. Accordingly, certain masks are described herein that include nutrient transport structures that do not generate diffraction patterns or otherwise interfere with the vision enhancing effects of the mask embodiments.

[0243] **FIGS. 60-61** show one embodiment of a mask **3000** configured to increase depth of focus of an eye of a patient suffering from presbyopia. The mask **3000** is similar to the masks hereinbefore described, except as set forth below. The mask **3000** is configured to be applied to an eye of a patient, e.g., by being implanted in the cornea of the patient. The mask **3000** may be implanted within the cornea in any suitable manner, such as those discussed above in connection with **FIGS. 53A-54C**.

[0244] In one embodiment, the mask **3000** includes a body **3004** that has an anterior surface **3008** and a posterior surface **3012**. In one embodiment, the body **3004** is capable of substantially maintaining natural nutrient flow between the first corneal layer and the second corneal layer. In one embodiment, the material is selected to maintain at least about ninety-six percent of the natural flow of at least one nutrient (e.g., glucose) between a first corneal layer (e.g., the layer **1410**) and a second corneal layer (e.g., the layer **1430**). The body **3004** may be formed of any suitable material, including at least one of an open cell foam material, an expanded solid material, and a substantially opaque material. In one embodiment, the material used to form the body **3004** has relatively high water content.

[0245] In one embodiment, the mask **3000** includes and a nutrient transport structure **3016**. The nutrient transport structure **3016** may comprise a plurality of holes **3020**. The holes **3020** are shown on only a portion of the mask **3000**, but the holes **3020** preferably are located throughout the body **3004** in one embodiment. In one embodiment, the holes **3020** are arranged in a hex pattern, which is illustrated by a plurality of locations **3020'** in **FIG. 62A**. As discussed below, a plurality of locations may be defined and later used in the later formation of a plurality of holes **3020** on the mask **3000**. The mask **3000** has an outer periphery **3024** that defines an outer edge of the body **3004**. In some embodiments, the mask **3000** includes an aperture **3028** at least partially surrounded by the outer periphery **3024** and a non-transmissive portion **3032** located between the outer periphery **3024** and the aperture **3028**.

[0246] Preferably the mask **3000** is symmetrical, e.g., symmetrical about a mask axis **3036**. In one embodiment, the outer periphery **3024** of the mask **3000** is circular and has a diameter of less than about 6 mm in one embodiment. In another embodiment, the mask is circular and has a diameter in the range of 4 to 6 mm. In another embodiment, the mask **3000** is circular and has a diameter of less than 4 mm. The outer periphery **3024** has a diameter of about 3.8 mm in another embodiment. In some embodiments, masks that are asymmetrical or that are not symmetrical about a mask axis provide benefits, such as enabling a mask to be located or maintained in a selected position with respect to the anatomy of the eye.

[0247] The body **3004** of the mask **3000** may be configured to coupled with a particular anatomical region of the eye. The body **3004** of the mask **3000** may be configured to conform to the native anatomy of the region of the eye in which it is to be applied. For example, where the mask **3000** is to be coupled with an ocular structure that has curvature, the body **3004** may be provided with an amount of curvature along the mask axis **3036** that corresponds to the anatomical curvature. For example, one environment in which the mask **3000** may be deployed is within the cornea of the eye of a patient. The cornea has an amount of curvature that varies from person to person about a substantially constant mean value within an identifiable group, e.g., adults. When applying the mask **3000** within the cornea, at least one of the anterior and posterior surfaces **3008**, **3012** of the mask **3000** may be provided with an amount of curvature corresponding to that of the layers of the cornea between which the mask **3000** is applied.

[0248] In some embodiments, the mask **3000** has a desired amount of optical power. Optical power may be provided by configuring the at least one of the anterior and posterior surfaces **3008**, **3012** with curvature. In one embodiment, the anterior and posterior surfaces **3008**, **3012** are provided with different amounts of curvature. In this embodiment, the mask **3000** has varying thickness from the outer periphery **3024** to the aperture **3028**.

[0249] In one embodiment, one of the anterior surface **3008** and the posterior surface **3012** of the body **3004** is substantially planar. In one planar embodiment, very little or no uniform curvature can be measured across the planar surface. In another embodiment, both of the anterior and posterior surfaces **3008**, **3012** are substantially planar. In one embodiment, the body **3004** of the mask **3000** has a thickness **3038** of between about 5 micron and about 10 micron. In one embodiment, the thickness **3038** of the mask **3000** is about 5 micron. In another embodiment, the thickness **3038** of the mask **3000** is about 8 micron. In another embodiment, the thickness **3038** of the mask **3000** is about 10 micron.

[0250] Thinner masks generally are more suitable for applications wherein the mask **3000** is implanted at a relatively shallow location in (e.g., close to the anterior surface of) the cornea. In thinner masks, the body **3004** may be sufficiently flexible such that it can take on the curvature of the structures with which it is coupled without negatively affecting the optical performance of the mask **3000**. In one application, the mask **3000** is configured to be implanted about 5 um beneath the anterior surface of the cornea. In another application, the mask **3000** is configured to be implanted about 65 um beneath the anterior surface of the cornea. In another application, the mask **3000** is configured to be implanted about 125 um beneath the anterior surface of the cornea. Further details regarding implanting the mask **3000** in the cornea are discussed above in connection with **FIGS. 53A-54C**.

[0251] A substantially planar mask has several advantages over a non-planar mask. For example, a substantially planar mask can be fabricated more easily than one that has to be formed to a particular curvature. In particular, the process steps involved in inducing curvature in the mask **3000** can be eliminated. Also, a substantially planar mask may be more amenable to use on a wider distribution of the patient population (or among different sub-groups of a broader patient population) because the substantially planar mask uses the curvature of each patient's cornea to induce the appropriate amount of curvature in the body **3004**.

[0252] In some embodiments, the mask **3000** is configured specifically for the manner and location of coupling with the eye. In particular, the mask **3000** may be larger if applied over the eye as a contact lens or may be smaller if applied within the eye posterior of the cornea, e.g., proximate a surface of the lens of the eye. As discussed above, the thickness **3038** of the body **3004** of the mask **3000** may be varied based on where the mask **3000** is implanted. For implantation at deeper levels within the cornea, a thicker mask may be advantageous. Thicker masks are advantageous in some applications. For example, they are generally easier to handle, and therefore are easier to fabricate and to implant. Thicker masks may benefit more from having a preformed curvature than thinner masks. A thicker mask could be configured to have little or no curvature prior to implantation if it is configured to conform to the curvature of the native anatomy when applied.

[0253] The aperture **3028** is configured to transmit substantially all incident light along the mask axis **3036**. The non-transmissive portion **3032** surrounds at least a portion of the aperture **3028** and substantially prevents transmission of incident light thereon. As discussed in connection with the above masks, the aperture **3028** may be a through-hole in the body **3004** or a substantially light transmissive (e.g., transparent) portion thereof. The aperture **3028** of the mask **3000** generally is defined within the outer periphery **3024** of the mask **3000**. The aperture **3028** may take any of suitable configurations, such as those described above in connection with **FIGS. 6-42**.

[0254] In one embodiment, the aperture **3028** is substantially circular and is substantially centered in the mask **3000**. The size of the aperture **3028** may be any size that is effective to increase the depth of focus of an eye of a patient suffering from presbyopia. For example, the aperture **3028** can be circular, having a diameter of less than about 2.2 mm in one embodiment. In another embodiment, the diameter of the aperture is between about 1.8 mm and about 2.2 mm. In another embodiment, the aperture **3028** is circular and has a diameter of about 1.8 mm or less.

[0255] The non-transmissive portion **3032** is configured to prevent transmission of radiant energy through the mask **3000**. For example, in one embodiment, the non-transmissive portion **3032** prevents transmission of substantially all of at least a portion of the spectrum of the incident radiant energy. In one embodiment, the non-transmissive portion **3032** is configured to prevent transmission of substantially all visible light, e.g., radiant energy in the electromagnetic spectrum that is visible to the human eye. The non-transmissive portion **3032** may substantially prevent transmission of radiant energy outside the range visible to humans in some embodiments.

[0256] As discussed above in connection with **FIG. 3**, preventing transmission of light through the non-transmissive portion **3032** decreases the amount of light that reaches the retina and the fovea that would not converge at the retina and fovea to form a sharp image. As discussed above in connection with **FIG. 4**, the size of the aperture **3028** is such that the light transmitted therethrough generally converges at the retina or fovea. Accordingly, a much sharper image is presented to the eye than would otherwise be the case without the mask **3000**.

[0257] In one embodiment, the non-transmissive portion **3032** prevents transmission of about 90 percent of incident light. In another embodiment, the non-transmissive portion **3032** prevents transmission of about 92 percent of all incident light. The non-transmissive portion **3032** of the mask **3000** may be configured to be opaque to prevent the transmission of light. As used herein the term "opaque" is intended to be a broad term meaning capable of preventing the transmission of radiant energy, e.g., light energy, and also covers structures and arrangements that absorb or otherwise block all or less than all or at least a substantial portion of the light. In one embodiment, at least a portion of the body **3004** is configured to be opaque to more than 99 percent of the light incident thereon.

[0258] As discussed above, the non-transmissive portion **3032** may be configured to prevent transmission of light

without absorbing the incident light. For example, the mask **3000** could be made reflective or could be made to interact with the light in a more complex manner, as discussed in U.S. Pat. No. 6,554,424, issued Apr. 29, 2003, which is hereby incorporated by reference herein in its entirety.

[**0259**] As discussed above, the mask **3000** also has a nutrient transport structure that in some embodiments comprises the plurality of holes **3020**. The presence of the plurality of holes **3020** (or other transport structure) may affect the transmission of light through the non-transmissive portion **3032** by potentially allowing more light to pass through the mask **3000**. In one embodiment, the non-transmissive portion **3032** is configured to absorb about 99 percent or more of the incident light from passing through the mask **3000** without holes **3020** being present. The presence of the plurality of holes **3020** allows more light to pass through the non-transmissive portion **3032** such that only about 92 percent of the light incident on the non-transmissive portion **3032** is prevented from passing through the non-transmissive portion **3032**. The holes **3020** may reduce the benefit of the aperture **3028** on the depth of focus of the eye by allowing more light to pass through the non-transmissive portion to the retina.

[**0260**] Reduction in the depth of focus benefit of the aperture **3028** due to the holes **3020** is balanced by the nutrient transmission benefits of the holes **3020**. In one embodiment, the transport structure **3016** (e.g., the holes **3020**) is capable of substantially maintaining natural nutrient flow from a first corneal layer (i.e., one that is adjacent to the anterior surface **3008** of the mask **3000**) to the second corneal layer (i.e., one that is adjacent to the posterior surface **3012** of the mask **3000**). The plurality of holes **3020** are configured to enable nutrients to pass through the mask **3000** between the anterior surface **3008** and the posterior surface **3012**. As discussed above, the holes **3020** of the mask **3000** shown in **FIG. 60** may be located anywhere on the mask **3000**. Other mask embodiments described hereinbelow locate substantially all of the nutrient transport structure in one or more regions of a mask.

[**0261**] The holes **3020** of **FIG. 60** extends at least partially between the anterior surface **3008** and the posterior surface **3012** of the mask **3000**. In one embodiment, each of the holes **3020** includes a hole entrance **3060** and a hole exit **3064**. The hole entrance **3060** is located adjacent to the anterior surface **3008** of the mask **3000**. The hole exit **3064** is located adjacent to the posterior surface **3012** of the mask **3000**. In one embodiment, each of the holes **3020** extends the entire distance between the anterior surface **3008** and the posterior surface **3012** of the mask **3000**.

[**0262**] The transport structure **3016** is configured to maintain the transport of one or more nutrients across the mask **3000**. The transport structure **3016** of the mask **3000** provides sufficient flow of one or more nutrients across the mask **3000** to prevent depletion of nutrients at least at one of the first and second corneal layers (e.g., the layers **1410** and **1430**). One nutrient of particular importance to the viability of the adjacent corneal layers is glucose. The transport structure **3016** of the mask **3000** provides sufficient flow of glucose across the mask **3000** between the first and second corneal layers to prevent glucose depletion that would harm the adjacent corneal tissue. Thus, the mask **3000** is capable of substantially maintaining nutrient flow (e.g., glucose flow) between adjacent corneal layers. In one embodiment, the nutrient transport structure **3016** is configured to prevent depletion of more than about 4 percent of glucose (or other biological substance) in adjacent tissue of at least one of the first corneal layer and the second corneal layer.

[**0263**] The holes **3020** may be configured to maintain the transport of nutrients across the mask **3000**. In one embodiment, the holes **3020** are formed with a diameter of about 0.015 mm or more. In another embodiment, the holes have a diameter of about 0.020 mm. In another embodiment, the holes have a diameter of about 0.025 mm. In another embodiment, the holes **3020** have a diameter in the range of about 0.020 mm to about 0.029 mm. The number of holes in the plurality of holes **3020** is selected such that the sum of the surface areas of the hole entrances **3060** of all the holes **3000** comprises about 5 percent or more of surface area of the anterior surface **3008** of the mask **3000**. In another embodiment, the number of holes **3020** is selected such that the sum of the surface areas of the hole exits **3064** of all the holes **3020** comprises about 5 percent or more of surface area of the posterior surface **3012** of the mask **3000**. In another embodiment, the number of holes **3020** is selected such that the sum of the surface areas of the hole exits **3064** of all the holes **3020** comprises about 5 percent or more of surface area of the posterior surface **3012** of the mask **3012** and the sum of the surface areas of the hole entrances **3060** of all the holes **3020** comprises about 5 percent or more of surface area of the anterior surface **3008** of the mask **3000**.

[**0264**] Each of the holes **3020** may have a relatively constant cross-sectional area. In one embodiment, the cross-sectional shape of each of the holes **3020** is substantially circular. Each of the holes **3020** may comprise a cylinder extending between the anterior surface **3008** and the posterior surface **3012**.

[**0265**] The relative position of the holes **3020** is of interest in some embodiments. As discussed above, the holes **3020** of the mask **3000** are hex-packed, e.g., arranged in a hex pattern. In particular, in this embodiment, each of the holes **3020** is separated from the adjacent holes **3020** by a substantially constant distance, sometimes referred to herein as a hole pitch **3072**. In one embodiment, the hole pitch **3072** is about 0.062 mm.

[**0266**] The embodiment of **FIG. 60** advantageously enables nutrients to flow from the first corneal layer to the second corneal layer. The inventors have discovered that negative visual effects can arise due to the presence of the transport structure **3016**. For example, in some cases, a hex packed arrangement of the holes **3020** can generate diffraction patterns visible to the patient. For example, patients might observe a plurality of spots, e.g., six spots, surrounding a central light with holes **3020** having a hex patterned.

[**0267**] The inventors have discovered a variety of techniques that produce advantageous arrangements of a transport structure such that diffraction patterns and other deleterious visual effects do not substantially inhibit other visual benefits of a mask. In one embodiment, where diffraction effects would be observable, the nutrient transport structure is arranged to spread the diffracted light out uniformly across the image to eliminate observable spots. In another embodiment, the nutrient transport structure employs a pattern that substantially eliminates diffraction patterns or pushes the patterns to the periphery of the image.

[0268] **FIG. 62B-62C** show two embodiments of patterns of holes **4020** that may be applied to a mask that is otherwise substantially similar to the mask **3000**. The holes **4020** of the hole patterns of **FIGS. 62A-62B** are spaced from each other by a random hole spacing or hole pitch. In other embodiments discussed below, holes are spaced from each other by a non-uniform amount, e.g., not a random amount. In one embodiment, the holes **4020** have a substantially uniform shape (cylindrical shafts having a substantially constant cross-sectional area). **FIG. 62C** illustrates a plurality of holes **4020** separated by a random spacing, wherein the density of the holes is greater than that of **FIG. 62B**. Generally, the higher the percentage of the mask body that has holes the more the mask will transport nutrients in a manner similar to the native tissue. One way to provide a higher percentage of hole area is to increase the density of the holes. Increase hole density can also permit smaller holes to achieve the same nutrient transport as is achieved by less dense, larger holes.

[0269] **FIG. 63A** shows a portion of another mask **4000***a* that is substantially similar to the mask **3000**, except as set forth below. The mask **4000***a* has a plurality of holes **4020***a*. A substantial number of the holes **4020***a* have a non-uniform size. The holes **4020***a* may be uniform in cross-sectional shape. The cross-sectional shape of the holes **4020***a* is substantially circular in one embodiment. The holes **4020***a* may be circular in shape and have the same diameter from a hole entrance to a hole exit, but are otherwise non-uniform in at least one aspect, e.g., in size. It may be preferable to vary the size of a substantial number of the holes by a random amount. In another embodiment, the holes **4020***a* are non-uniform (e.g., random) in size and are separated by a non-uniform (e.g., a random) spacing.

[0270] **FIG. 63B** illustrates another embodiment of a mask **4000***b* that is substantially similar to the mask **3000**, except as set forth below. The mask **4000***b* includes a body **4004***b*. The mask **4000***b* has a transport structure **4016***b* that includes a plurality of holes **4020***b* with a non-uniform facet orientation. In particular, each of the holes **4020***b* has a hole entrance **4060***b* that may be located at an anterior surface **4008***b* of the mask **4000***b*. A facet **4062***b* of the hole entrance **4060***b* is defined by a portion of the body **4004***b* of the mask **4000***b* surrounding the hole entrance **4060***b*. The facet **4062***b* is the shape of the hole entrance **4060***b* at the anterior surface **4008***b*. In one embodiment, most or all the facets **4062***b* have an elongate shape, e.g., an oblong shape, with a long axis and a short axis that is perpendicular to the long axis. The facets **4062***b* may be substantially uniform in shape. In one embodiment, the orientation of facets **4062***b* is not uniform. For example, a substantial number of the facets **4062** may have a non-uniform orientation. In one arrangement, a substantial number of the facets **4062** have a random orientation. In some embodiments, the facets **4062***b* are non-uniform (e.g., random) in shape and are non-uniform (e.g., random) in orientation.

[0271] Other embodiments may be provided that vary at least one aspect, including one or more of the foregoing aspects, of a plurality of holes to reduce the tendency of the holes to produce visible diffraction patterns or patterns that otherwise reduce the vision improvement that may be provided by a mask with an aperture, such as any of those described above. For example, in one embodiment, the hole size, shape, and orientation of at least a substantial number of the holes may be varied randomly or may be otherwise non-uniform.

[0272] **FIG. 64** shows another embodiment of a mask **4200** that is substantially similar to any of the masks hereinbefore described, except as set forth below. The mask **4200** includes a body **4204**. The body **4204** has an outer peripheral region **4205**, an inner peripheral region **4206**, and a hole region **4207**. The hole region **4207** is located between the outer peripheral region **4205** and the outer peripheral region **4206**. The body **4204** may also include an aperture region, where the aperture (discussed below) is not a through hole. The mask **4200** also includes a nutrient transport structure **4216**. In one embodiment, the nutrient transport structure includes a plurality of holes **4220**. At least a substantial portion of the holes **4220** (e.g., all of the holes) are located in the hole region **4207**. As above, only a portion of the nutrient structure **4216** is shown for simplicity. But it should be understood that the hole **4220** may be located through the hole region **4207**.

[0273] The outer peripheral region **4205** may extend from an outer periphery **4224** of the mask **4200** to a selected outer circumference **4226** of the mask **4200**. The selected outer circumference **4225** of the mask **4200** is located a selected radial distance from the outer periphery **4224** of the mask **4200**. In one embodiment, the selected outer circumference **4225** of the mask **4200** is located about 0.05 mm from the outer periphery **4224** of the mask **4200**.

[0274] The inner peripheral region **4206** may extend from an inner location, e.g., an inner periphery **4226** adjacent an aperture **4228** of the mask **4200** to a selected inner circumference **4227** of the mask **4200**. The selected inner circumference **4227** of the mask **4200** is located a selected radial distance from the inner periphery **4226** of the mask **4200**. In one embodiment, the selected inner circumference **4227** of the mask **4200** is located about 0.05 mm from the inner periphery **4226**.

[0275] The mask **4200** may be the product of a process that involves random selection of a plurality of locations and formation of holes on the mask **4200** corresponding to the locations. As discussed further below, the method can also involve determining whether the selected locations satisfy one or more criteria. For example, one criterion prohibits all, at least a majority, or at least a substantial portion of the holes from being formed at locations that correspond to the inner or outer peripheral regions **4205**, **4206**. Another criterion prohibits all, at least a majority, or at least a substantial portion of the holes **4220** from being formed too close to each other. For example, such a criterion could be used to assure that a wall thickness, e.g., the shortest distance between adjacent holes, is not less than a predetermined amount. In one embodiment, the wall thickness is prevented from being less than about 20 microns.

[0276] In a variation of the embodiment of **FIG. 64**, the outer peripheral region **4205** is eliminated and the hole region **4207** extends from the inner peripheral region **4206** to an outer periphery **4224**. In another variation of the embodiment of **FIG. 64**, the inner peripheral region **4206** is eliminated and the hole region **4207** extends from the outer peripheral region **4205** to an inner periphery **4226**.

[0277] **FIG. 61B** shows a mask **4300** that is similar to the mask **3000** except as set forth below. The mask **4300**

includes a body **4304** that has an anterior surface **4308** and a posterior surface **4312**. The mask **4300** also includes a nutrient transport structure **4316** that, in one embodiment, includes a plurality of holes **4320**. The holes **4320** are formed in the body **4304** so that nutrient transport is provided but transmission of radiant energy (e.g., light) to the retinal locations adjacent the fovea through the holes **4304** is substantially prevented. In particular, the holes **4304** are formed such that when the eye with which the mask **4300** is coupled is directed at an object to be viewed, light conveying the image of that object that enters the holes **4320** cannot exit the holes along a path ending near the fovea.

[**0278**] In one embodiment, each of the holes **4320** has a hole entrance **4360** and a hole exit **4364**. Each of the holes **4320** extends along a transport axis **4366**. The transport axis **4366** is formed to substantially prevent propagation of light from the anterior surface **4308** to the posterior surface **4312** through the holes **4320**. In one embodiment, at least a substantial number of the holes **4320** have a size to the transport axis **4366** that is less than a thickness of the mask **4300**. In another embodiment, at least a substantial number of the holes **4320** have a longest dimension of a perimeter at least at one of the anterior or posterior surfaces **4308**, **4312** (e.g., a facet) that is less than a thickness of the mask **4300**. In some embodiments, the transport axis **4366** is formed at an angle with respect to a mask axis **4336** that substantially prevents propagation of light from the anterior surface **4308** to the posterior surface **4312** through the hole **4320**. In another embodiment, the transport axis **4366** of one or more holes **4320** is formed at an angle with respect to the mask axis **4336** that is large enough to prevent the projection of most of the hole entrance **4360** from overlapping the hole exit **4364**.

[**0279**] In one embodiment, the hole **4320** is circular in cross-section and has a diameter between about 0.5 micron and about 8 micron and the transport axis **4366** is between 5 and 85 degrees. The length of each of the holes **4320** (e.g., the distance between the anterior surface **4308** and the posterior surface **4312**) is between about 8 and about 92 micron. In another embodiment, the diameter of the holes **4320** is about 5 micron and the transport angle is about 40 degrees or more. As the length of the holes **4320** increases it may be desirable to include additional holes **4320**. In some cases, additional holes **4320** counteract the tendency of longer holes to reduce the amount of nutrient flow through the mask **4300**.

[**0280**] **FIG. 61C** shows another embodiment of a mask **4400** similar to the mask **3000**, except as set forth below. The mask **4400** includes a body **4404** that has an anterior surface **4408**, a first mask layer **4410** adjacent the anterior surface **44008**, a posterior surface **4412**, a second mask layer **4414** adjacent the posterior surface **4412**, and a third layer **4415** located between the first mask layer **4410** and the second mask layer **4414**. The mask **4400** also includes a nutrient transport structure **4416** that, in one embodiment, includes a plurality of holes **4420**. The holes **4420** are formed in the body **4404** so that nutrient are transported across the mask, as discussed above, but transmission of radiant energy (e.g., light) to retinal locations adjacent the fovea through the holes **4404** is substantially prevented. In particular, the holes **4404** are formed such that when the eye with which the mask **4400** is coupled is directed at an object to be viewed, light conveying the image of that object that enters the holes **4420** cannot exit the holes along a path ending near the fovea.

[**0281**] In one embodiment, at least one of the holes **4420** extends along a non-linear path that substantially prevents propagation of light from the anterior surface to the posterior surface through the at least one hole. In one embodiment, the mask **4400** includes a first hole portion **4420***a* that extends along a first transport axis **4466***a*, the second mask layer **4414** includes a second hole portion **4420***b* extending along a second transport axis **4466***b*, and the third mask layer **4415** includes a third hole portion **4420***c* extending along a third transport axis **4466***c*. The first, second, and third transport axes **4466***a*, **4466***b*, **4466***c* preferably are not collinear. In one embodiment, the first and second transport axes **4466***a*, **4466***b* are parallel but are off-set by a first selected amount. In one embodiment, the second and third transport axes **4466***b*, **4466***c* are parallel but are off-set by a second selected amount. In the illustrated embodiment, each of the transport axes **44466***a*, **4466***b*, **4466***c* are off-set by one-half of the width of the hole portions **4420***a*, **4420***b*, **4420***c*. Thus, the inner-most edge of the hole portion **4420***a* is spaced from the axis **4336** by a distance that is equal to or greater than the distance of the outer-most edge of the hole portion **4420***b* from the axis **4336**. This spacing substantially prevents light from passing through the holes **4420** from the anterior surface **4408** to the posterior surface **4412**.

[**0282**] In one embodiment, the first and second amounts are selected to substantially prevent the transmission of light therethrough. The first and second amounts of off-set may be achieved in any suitable fashion. One technique for forming the hole portions **4420***a*, **4420***b*, **4420***c* with the desired off-set is to provide a layered structure. As discussed above, the mask **4400** may include the first layer **4410**, the second layer **4414**, and the third layer **4415**. **FIG. 61C** shows that the mask **4400** can be formed with three layers. In another embodiment, the mask **4400** is formed of more than three layers. Providing more layers may advantageously further decrease the tendency of light to be transmitted through the holes **4420** onto the retina. This has the benefit of reducing the likelihood that a patient will observe or otherwise perceive a patter that will detract from the vision benefits of the mask **4400**. A further benefit is that less light will pass through the mask **4400**, thereby enhancing the depth of focus increase due to the pin-hole sized aperture formed therein.

[**0283**] In any of the foregoing mask embodiments, the body of the mask may be formed of a material selected to provide adequate nutrient transport and to substantially prevent negative optic effects, such as diffraction, as discussed above. In various embodiments, the masks are formed of an open cell foam material. In another embodiment, the masks are formed of an expanded solid material.

[**0284**] As discussed above in connection with **FIGS. 62B and 62C**, various random patterns of holes may advantageously be provided for nutrient transport. In some embodiment, it may be sufficient to provide regular patterns that are non-uniform in some aspect. Non-uniform aspects to the holes may be provided by any suitable technique.

[**0285**] In a first step of one technique, a plurality of locations **4020'** is generated. The locations **4020'** are a series of coordinates that may comprise a non-uniform pattern or a regular pattern. The locations **4020'** may be randomly

generated or may be related by a mathematical relationship (e.g., separated by a fixed spacing or by an amount that can be mathematically defined). In one embodiment, the locations are selected to be separated by a constant pitch or spacing and may be hex packed.

[0286] In a second step, a subset of the locations among the plurality of locations **4020'** is modified to maintain a performance characteristic of the mask. The performance characteristic may be any performance characteristic of the mask. For example, the performance characteristic may relate to the structural integrity of the mask. Where the plurality of locations **4020'** is selected at random, the process of modifying the subset of locations may make the resulting pattern of holes in the mask a "pseudo-random" pattern.

[0287] Where a hex packed pattern of locations (such as the locations **3020'** of **FIG. 62A**) is selected in the first step, the subset of locations may be moved with respect to their initial positions as selected in the first step. In one embodiment, each of the locations in the subset of locations is moved by an amount equal to a fraction of the hole spacing. For example, each of the locations in the subset of locations may be moved by an amount equal to one-quarter of the hole spacing. Where the subset of locations is moved by a constant amount, the locations that are moved preferably are randomly or pseudo-randomly selected. In another embodiment, the subset of location is moved by a random or a pseudo-random amount.

[0288] In one technique, an outer peripheral region is defined that extends between the outer periphery of the mask and a selected radial distance of about 0.05 mm from the outer periphery. In another embodiment, an inner peripheral region is defined that extends between an aperture of the mask and a selected radial distance of about 0.05 mm from the aperture. In another embodiment, an outer peripheral region is defined that extends between the outer periphery of the mask and a selected radial distance and an inner peripheral region is defined that extends between the aperture of the mask and a selected radial distance from the aperture. In one technique, the subset of location is modified by excluding those locations that would correspond to holes formed in the inner peripheral region or the outer peripheral region. By excluding locations in at least one of the outer peripheral region and the inner peripheral region, the strength of the mask in these regions is increased. Several benefits are provided by stronger inner and outer peripheral regions. For example, the mask may be easier to handle during manufacturing or when being applied to a patient without causing damage to the mask.

[0289] In another embodiment, the subset of locations is modified by comparing the separation of the holes with minimum and or maximum limits. For example, it may be desirable to assure that no two locations are closer than a minimum value. In some embodiments this is important to assure that the wall thickness, which corresponds to the separation between adjacent holes, is no less than a minimum amount. As discussed above, the minimum value of separation is about 20 microns in one embodiment, thereby providing a wall thickness of no less than about 20 microns.

[0290] In another embodiment, the subset of locations is modified and/or the pattern of location is augmented to maintain an optical characteristic of the mask. For example, the optical characteristic may be opacity and the subset of locations may be modified to maintain the opacity of a non-transmissive portion of a mask. In another embodiment, the subset of locations may be modified by equalizing the density of holes in a first region of the body compared with the density of holes in a second region of the body. For example, the locations corresponding to the first and second regions of the non-transmissive portion of the mask may be identified. In one embodiment, the first region and the second region are arcuate regions (e.g., wedges) of substantially equal area. A first areal density of locations (e.g., locations per square inch) is calculated for the locations corresponding to the first region and a second areal density of locations is calculated for the locations corresponding to the second region. In one embodiment, at least one location is added to either the first or the second region based on the comparison of the first and second areal densities. In another embodiment, at least one location is removed based on the comparison of the first and second areal densities.

[0291] The subset of locations may be modified to maintain nutrient transport of the mask. In one embodiment, the subset of location is modified to maintain glucose transport.

[0292] In a third step, a hole is formed in a body of a mask at locations corresponding to the pattern of locations as modified, augmented, or modified and augmented. The holes are configured to substantially maintain natural nutrient flow from the first layer to the second layer without producing visible diffraction patterns.

VI. Further Methods of Treating a Patient

[0293] As discussed above in, various techniques are particularly suited for treating a patient by applying masks such as those disclosed herein to an eye. For example, in some embodiments, the surgical system **2000** of **FIG. 55** employs a marking module **2024** that provides a visual cue in the form of a projected image for a surgeon during a procedure for applying a mask. In addition, some techniques for treating a patient involve positioning an implant with the aid of a marked reference point. These methods are illustrated by **FIGS. 65-66B**.

[0294] In one method, a patient is treated by placing an implant **5000** in a cornea **5004**. A corneal flap **5008** is lifted to expose a surface in the cornea **5004** (e.g., an intracorneal surface). Any suitable tool or technique may be used to lift the corneal flap **5008** to expose a surface in the cornea **5004**. For example, a blade (e.g., a microkeratome), a laser or an electrosurgical tool could be used to form a corneal flap. A reference point **5012** on the cornea **5004** is identified. The reference point **5012** thereafter is marked in one technique, as discussed further below. The implant **5000** is positioned on the intracorneal surface. In one embodiment, the flap **5008** is then closed to cover at least a portion of the implant **5000**.

[0295] The surface of the cornea that is exposed is a stromal surface in one technique. The stromal surface may be on the corneal flap **5008** or on an exposed surface from which the corneal flap **5008** is removed.

[0296] The reference point **5012** may be identified in any suitable manner. For example, the alignment devices and methods described above may be used to identify the reference point **5012**. In one technique, identifying the reference point **5012** involves illuminating a light spot (e.g., a spot of light formed by all or a discrete portion of radiant

energy corresponding to visible light, e.g., red light). As discussed above, the identifying of a reference point may further include placing liquid (e.g., a fluorescein dye or other dye) on the intracorneal surface. Preferably, identifying the reference point **5012** involves alignment using any of the techniques described herein.

[**0297**] As discussed above, various techniques may be used to mark an identified reference point. In one technique the reference point is marked by applying a dye to the cornea or otherwise spreading a material with known reflective properties onto the cornea. As discussed above, the dye may be a substance that interacts with radiant energy to increase the visibility of a marking target or other visual cue. The reference point may be marked by a dye with any suitable tool. The tool is configured so that it bites into a corneal layer, e.g., an anterior layer of the epithelium, and delivers a thin ink line into the corneal layer in one embodiment. The tool may be made sharp to bite into the epithelium. In one application, the tool is configured to deliver the dye as discussed above upon being lightly pressed against the eye. This arrangement is advantageous in that it does not form a larger impression in the eye. In another technique, the reference point may be marked by making an impression (e.g., a physical depression) on a surface of the cornea with or without additional delivery of a dye. In another technique, the reference point may be marked by illuminating a light or other source of radiant energy, e.g., a marking target illuminator and projecting that light onto the cornea (e.g., by projecting a marking target).

[**0298**] Any of the foregoing techniques for marking a reference point may be combined with techniques that make a mark that indicates the location of an axis of the eye, e.g., the visual axis or line-of-sight of the eye. In one technique, a mark indicates the approximate intersection of the visual axis and a surface of the cornea. In another technique, a mark is made approximately radially symmetrically disposed about the intersection of the visual axis and a surface of the cornea.

[**0299**] As discussed above, some techniques involve making a mark on an intracorneal surface. The mark may be made by any suitable technique. In one technique a mark is made by pressing an implement against the instracorneal surface. The implement may form a depression that has a size and shape that facilitate placement of a mask. For example, in one form the implement is configured to form a circular ring (e.g., a thin line of dye, or a physical depression, or both) with a diameter that is slightly larger than the outer diameter of a mask to be implanted. The circular ring can be formed to have a diameter between about 4 mm and about 5 mm. The intracorneal surface is on the corneal flap **5008** in one technique. In another technique, the intracorneal surface is on an exposed surface of the cornea from which the flap was removed. This exposed surface is sometimes referred to as a tissue bed.

[**0300**] In another technique, the corneal flap **5008** is lifted and thereafter is laid on an adjacent surface **5016** of the cornea **5004**. In another technique, the corneal flap **5008** is laid on a removable support **5020**, such as a sponge. In one technique, the removable support has a surface **5024** that is configured to maintain the native curvature of the corneal flap **5008**.

[**0301**] **FIG. 65** shows that the marked reference point **5012** is helpful in positioning an implant on an intracorneal surface. In particular, the marked reference point **5012** enables the implant to be positioned with respect to the visual axis of the eye. In the illustrated embodiment, the implant **5000** is positioned so that a centerline of the implant, indicated as M_{CL}, extends through the marked reference point **5012**.

[**0302**] **FIG. 65A** illustrates another technique wherein a reference **5012'** is a ring or other two dimensional mark. In such a case, the implant **5000** may be placed so that an outer edge of the implant and the ring correspond, e.g., such that the ring and the implant **5000** share the same or substantially the same center. Preferably, the ring and the implant **5000** are aligned so that the centerline of the implant M_{CL} is on the line of sight of the eye, as discussed above. The ring is shown in dashed lines because in the illustrated technique, it is formed on the anterior surface of the corneal flap **5008**.

[**0303**] In one technique, the corneal flap **5008** is closed by returning the corneal flap **5008** to the cornea **5004** with the implant **5000** on the corneal flap **5008**. In another technique, the corneal flap **5008** is closed by returning the corneal flap **5008** to the cornea **5004** over the implant **5000**, which previously was placed on the tissue bed (the exposed intracorneal surface).

[**0304**] When the intracorneal surface is a stromal surface, the implant **5000** is placed on the stromal surface. At least a portion of the implant **5000** is covered. In some techniques, the implant **5000** is covered by returning a flap with the implant **5000** thereon to the cornea **5004** to cover the stromal surface. In one technique, the stromal surface is exposed by lifting an epithelial layer to expose stroma. In another technique, the stromal surface is exposed by removing an epithelial layer to expose stroma. In some techniques, an additional step of replacing the epithelial layer to at least partially cover the implant **5000** is performed.

[**0305**] After the flap **5008** is closed to cover at least a portion of the implant **5000**, the implant **5000** may be repositioned to some extent in some applications. In one technique, pressure is applied to the implant **5000** to move the implant into alignment with the reference point **5012**. The pressure may be applied to the anterior surface of the cornea **5004** proximate an edge of the implant **5000** (e.g., directly above, above and outside a projection of the outer periphery of the implant **5000**, or above and inside a projection of the outer periphery of the implant **5000**). This may cause the implant to move slightly away from the edge proximate which pressure is applied. In another technique, pressure is applied directly to the implant. The implant **5000** may be repositioned in this manner if the reference point **5012** was marked on the flap **5008** or if the reference point **5012** was marked on the tissue bed.

[**0306**] **FIG. 66** shows that a patient may also be treated by a method that positions an implant **5100** in a cornea **5104**, e.g., in a corneal pocket **5108**. Any suitable tool or technique may be used to create or form the corneal pocket **5108**. For example, a blade (e.g., a microkeratome), a laser, or an electrosurgical tool could be used to create or form a pocket in the cornea **5104**. A reference point **5112** is identified on the cornea **5104**. The reference point may be identified by any suitable technique, such as those discussed herein. The reference point **5112** is marked by any suitable technique, such as those discussed herein. The corneal pocket **5108** is created to expose an intracorneal surface **5116**. The corneal

pocket **5108** may be created at any suitable depth, for example at a depth within a range of from about 50 microns to about 300 microns from the anterior surface of the cornea **5104**. The implant **5100** is positioned on the intracorneal surface **5116**. The marked reference point **5112** is helpful in positioning the implant **5100** on the intracorneal surface **5116**. The marked reference point **5112** enables the implant **5100** to be positioned with respect to the visual axis of the eye, as discussed above. In the illustrated embodiment, the implant **5100** is positioned so that a centerline M_{CL} of the implant **5100** extends through or adjacent to the marked reference point **5112**.

[**0307**] **FIG. 66A** illustrates another technique wherein a reference **5112'** is a ring or other two dimensional mark. In such case, the implant **5100** may be placed so that an outer edge of the implant and the ring correspond, e.g., such that the ring and the implant **5100** share the same or substantially the same center. Preferably, the ring and the implant **5100** are aligned so that the centerline of the implant M_{CL} is on the line of sight of the eye, as discussed above. The ring is shown in solid lines because in the illustrated embodiment, it is formed on the anterior surface of the cornea **5104** above the pocket **5108**.

[**0308**] After the implant **5100** is positioned in the pocket **5108**, the implant **5100** may be repositioned to some extent in some applications. In one technique, pressure is applied to the implant **5100** to move the implant into alignment with the reference point **5112**. The pressure may be applied to the anterior surface of the cornea **5104** proximate an edge of the implant **5100** (e.g., directly above, above and outside a projection of the outer periphery of the implant **5100**, or above and inside a projection of the outer periphery of the implant **5100**). This may cause the implant **5100** to move slightly away from the edge at which pressure is applied. In another technique, pressure is applied directly to the implant **5100**.

[**0309**] Although this invention has been disclosed in the context of certain preferred embodiments and examples, it will be understood by those skilled in the art that the present invention extends beyond the specifically disclosed embodiments to other alternative embodiments and/or uses of the invention and obvious modifications and equivalents thereof. In addition, while a number of variations of the invention have been shown and described in detail, other modifications, which are within the scope of this invention, will be readily apparent to those of skill in the art based upon this disclosure. It is also contemplated that various combinations or sub-combinations of the specific features and aspects of the embodiments may be made and still fall within the scope of the invention. Accordingly, it should be understood that various features and aspects of the disclosed embodiments can be combine with or substituted for one another in order to form varying modes of the disclosed invention. Thus, it is intended that the scope of the present invention herein disclosed should not be limited by the particular disclosed embodiments described above, but should be determined only by a fair reading of the claims that follow.

What is claimed is:

1. A method of increasing the depth of focus of an eye of a patient, the eye having a cornea and a visual axis, the method comprising:

aligning the visual axis with an instrument axis of an ophthalmic instrument, said instrument having an aperture through which the patient may look along the instrument axis, said aligning comprising:

imaging a first reference target on the instrument axis at a first distance with respect to the eye;

imaging a second reference target on the instrument axis, said second reference target being imaged at a second distance with respect to the patient's eye, the second distance being greater than the first distance; and

providing movement of the eye to a position where the images of the first and second reference targets appear to the patient's eye to be aligned;

aligning a mask comprising a pin-hole aperture having a mask axis with the instrument axis such that the mask axis is substantially collinear with the instrument axis;

accessing a layer of the cornea using a laser; and

applying the mask to the eye of the patient while maintaining the alignment of the mask axis and the instrument axis.

2. The method of claim 1, wherein accessing a layer of the cornea further comprises using the laser to form a corneal flap comprising at least the outer 5% of the cornea.

3. The method of claim 1, wherein accessing a layer of the cornea further comprises using the laser to create a pocket in the stroma at a position corresponding to the visual axis of the eye, the pocket being configured to receive the mask.

4. The method of claim 3, wherein applying the mask further comprises placing the mask in the pocket such that the mask axis corresponds with the visual axis of the eye.

5. A method of treating a patient, comprising the steps of:

identifying a reference point on a cornea;

marking the reference point;

accessing a stromal surface using a laser; and

positioning an implant on the stromal surface.

6. A method of treating a patient as in claim 5, wherein accessing a stromal surface further comprises lifting an epithelial layer to expose stroma.

7. A method of treating a patient as in claim 5, wherein accessing a stromal surface further comprises removing an epithelial layer to expose stroma.

8. A method of treating a patient as in claim 7, further comprising the step of replacing the epithelial layer to at least partially cover the implant.

9. A method of treating a patient as in claim 6, further comprising the step of replacing the epithelial layer to at least partially cover the implant.

* * * * *