Feb. 20, 1968 D. RONCO 3,369,543

MEDICINAL APPLICATORS

Filed March 30, 1965 2 Sheets-Sheet 1

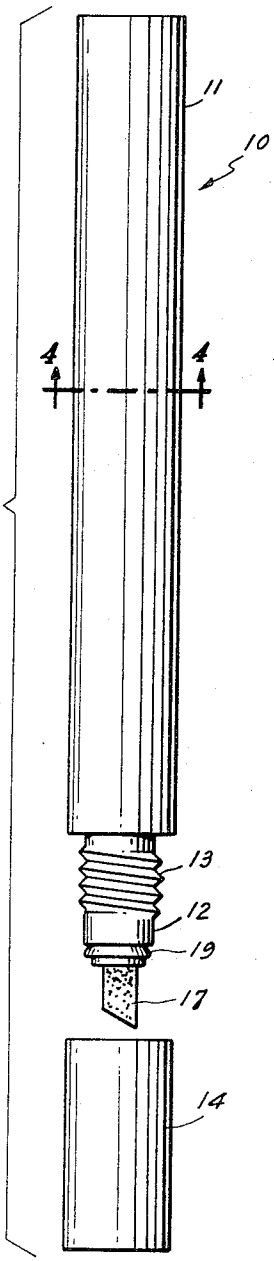

Fig. 1.

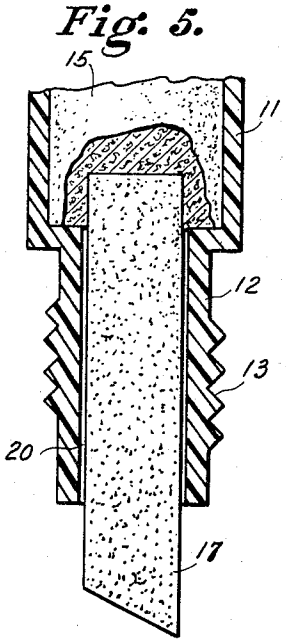

Fig. 5.

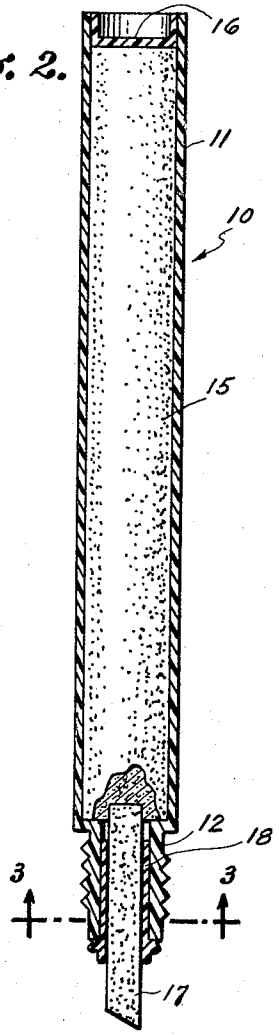

Fig. 2.

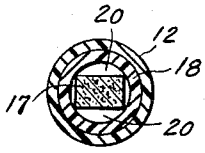

Fig. 3.

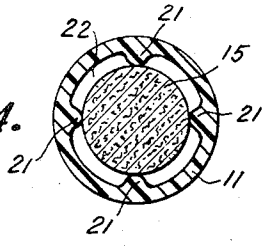

Fig. 4.

INVENTOR.
DENNIS RONCO

BY

ATTORNEY

Feb. 20, 1968 D. RONCO 3,369,543

MEDICINAL APPLICATORS

Filed March 30, 1965 2 Sheets-Sheet 2

Fig. 7.

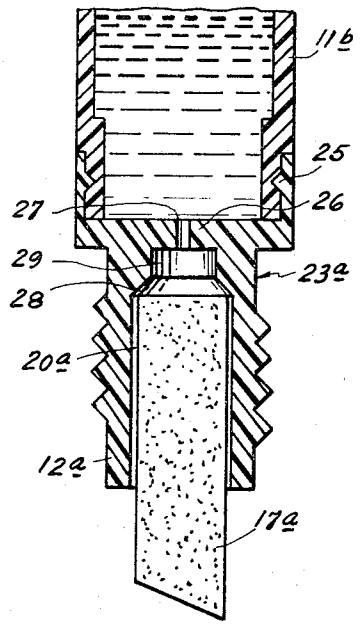

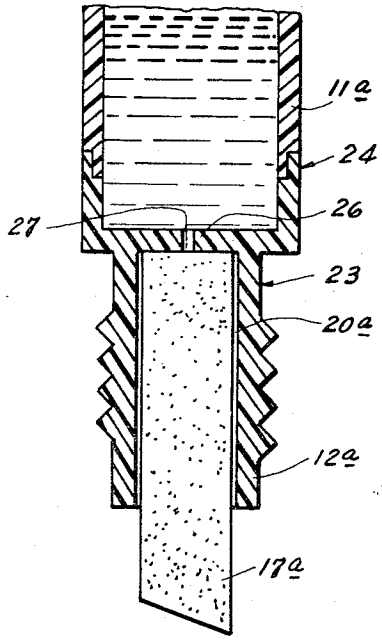

Fig. 8.

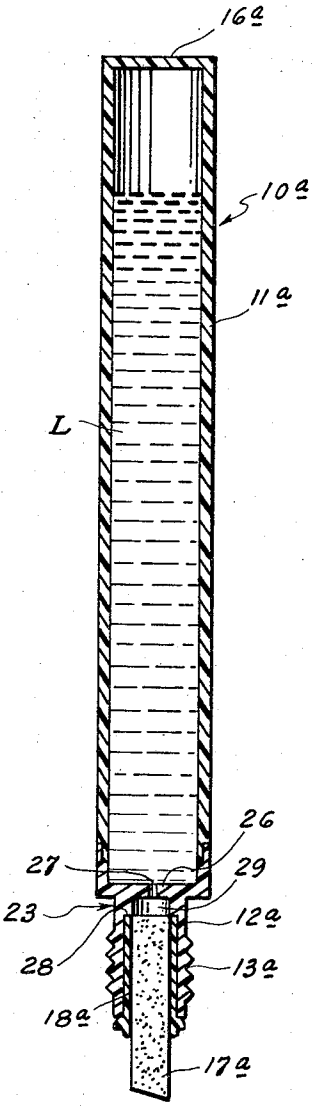

Fig. 6.

INVENTOR.
DENNIS RONCO

BY

ATTORNEY

United States Patent Office 3,369,543 Patented Feb. 20, 1968

3,369,543

MEDICINAL APPLICATORS

Dennis Ronco, Roseto, Pa., assignor to Deron Inc., West Easton, Pa., a corporation of Pennsylvania

Filed Mar. 30, 1965, Ser. No. 443,855
19 Claims. (Cl. 128—269)

ABSTRACT OF THE DISCLOSURE

A medicinal applicator comprising a resiliently deformable, hollow casing containing a liquid medicinal substance and having a neck opening at one end is provided with an absorbent wick member projecting axially from the neck and being frictionally retained either in the neck itself or in a sleeve which is removable with the wick member from the neck, and passages extend along, and are defined in part by the surface of the wick member to vent the interior of the casing to the atmosphere and to supplement the capillary transmission of the medicinal substance through the wick member when the casing is deformed by squeezing.

This invention relates generally to applicators for liquid medicinal substances, for example, antiseptic solutions such as tincture of iodine, Mercurochrome, and the like.

Heretofore, antiseptic solutions and other liquid medicinal substances to be applied externally have been contained in a glass bottle or the like having a removable stopper or cap provided with a depending glass rod which extends into the body of liquid medicinal substance in the bottle when the stopper or cap is positioned thereon. When the stopper or cap is removed from the bottle, it acts as a handle by which the glass rod can be manipulated to contact the wounded or other desired area of the skin for applying thereto the antiseptic solution or other liquid medicinal substance adhering to the rod. The described existing arrangement for applying liquid medicinal substances to external areas of the body is disadvantageous in that the amount of the antiseptic solution or other liquid medicinal substance adhering to the glass rod upon removal from the bottle decreases as the level of liquid medicinal substance in the bottle declines through use thereof so that it becomes difficult to apply sufficient quantities of the medicinal substance to the affected skin or other external area. Further, the glass rod frequently becomes detached from the stopper or cap in which case the supply of liquid medicinal substance in the bottle can no longer be applied conveniently even though a substantial quantity thereof may still remain. The glass bottle and glass applicating rod are not capable of withstanding rough handling or usage, and thus are subject to breakage when stored under conditions where rough handling or careless contact with hard objects is likely to occur, for example, in the glove compartments of automobiles. Further, most scrapes, superficial cuts and other skin injuries requiring the application of an antiseptic solution are inflicted by contact with the ground, pavement or other instrumentality which deposits dirt or grit in the wound so that it is necessary to cleanse or scrub the wound for removing the dirt or grit prior to the application of the antiseptic solution by the conventional glass applicator rod.

It is an object of this invention to provide applicators for storing and applying liquid medicinal substances which avoid the above mentioned disadvantages of the conventional arrangements heretobefore used for the stated purposes.

More specifically, it is an object of this invention to provide an applicator for a liquid medicinal substance, which applicator is substantially unbreakable even when subjected to severe shocks, and is capable of storing a substance quantity of a liquid medicinal substance in a leak-proof manner and of applying such substance to any desired external surface area of the body, for example, to a scrape, abrasion or cut.

A further object is to provide an applicator which, when it contains an antiseptic solution, can be employed for scrubbing or cleansing a scrape, abrasion, cut or other wound, as well as for applying the antiseptic solution thereto.

A further object is to provide an applicator of the described character which permits the application of the contained liquid medicinal substance at a controlled rate, as the circumstances require, and which is capable of discharging substantially the entire quantity of liquid medicinal substance contained therein, so as to avoid waste of the liquid medicinal substance.

In accordance with an aspect of this invention, a medicinal applicator generally comprises a hollow casing of resiliently deformable material, for example, of a relatively soft polyethylene, a quantity of antiseptic solution or other liquid medicinal substance contained in the casing, and an absorbent wick member projecting from the casing for the capillary transmission of the liquid medicinal substance therethrough to a desired area of application, for example, the area of a skin abrasion, scrape or cut, with the rate of flow of the liquid medicinal substance through and around the wick member being accelerated or increased by squeezing of the resiliently deformable casing.

The wick member which projects from the casing for transmitting the liquid medicinal substance to the affected skin area can be conveniently employed for scrubbing or cleansing such area, for example, for removing dirt or grit from a scrape or skin abrasion to which an antiseptic solution is being applied. In order to make possible the cleaning of the wick member for removal of coagulated blood, dirt or foreign substances therefrom, for example, by rinsing under a water tap or by immersion in a sterilizing solution, the wick member may be mounted in the casing so as to be conveniently removable therefrom. In accordance with a feature of this invention, convenient removal of the wick member is ensured by retaining the latter in a sleeve or holder which is frictionally held in the bore of a neck or terminal portion of the casing.

In one embodiment of this invention, the antiseptic solution or other liquid medicinal substance impregnates or saturates an absorbent body, for example, of cellulose fibres, which substantially fills the resiliently deformable casing so as to have the liquid medicinal substance expressed therefrom upon squeezing of the casing, and the inner end of the wick member contacts the absorbent body for receiving the liquid medicinal substance therefrom.

In another embodiment of this invention, a partition extends across the casing adjacent the inner end of the wick member and has a minute opening therein so that the surface tension of liquid medicinal substance contained in the casing normally prevents the flow thereof through the minute opening into the wick and flow of the liquid medicinal substance through the opening is achieved in response to an elevated pressure within the casing resulting from the squeezing thereof.

Still another object of this invention is to provide antiseptic solutions particularly adapted for use in applicators of the type described above by reason of the fact that such solutions can be transmitted, by capillary action, through the wick member of the applicator without clogging the same, and have an improved cleansing action

when the wick is used for cleaning or scrubbing a wound or abrasion.

The above, and other objects, features and advantages of this invention, will be apparent in the following detailed description of illustrative embodiments thereof which is to be read in connection with the accompanying drawing, wherein:

FIG. 1 is an elevational view of an applicator for liquid medicinal substances in accordance with an embodiment of this invention, which applicator is shown with its cap removed;

FIG. 2 is an axial sectional view of the applicator of FIG. 1;

FIG. 3 is an enlarged sectional view taken along the line 3—3 on FIG. 2;

FIG. 4 is an enlarged sectional view taken along the line 4—4 on FIG. 1;

FIG. 5 is a fragmentary sectional view corresponding to the lower portion of FIG. 2, but on an enlarged scale and showing a modification of the applicator;

FIG. 6 is a sectional view similar to that of FIG. 2, but showing another embodiment of the invention;

FIG. 7 is a fragmentary sectional view corresponding to the lower portion of FIG. 6, but on an enlarged scale and showing a modification of the embodiment of FIG. 6; and

FIG. 8 is a fragmentary sectional view similar to that of FIG. 7, but showing still another modification in accordance with the invention.

Referring to the drawing in detail, and initially to FIGS. 1 and 2 thereof, it will be seen that an applicator for liquid medicinal substances in accordance with one embodiment of this invention, as there illustrated and generally identified by the reference numeral **10**, includes an elongated hollow casing **11**, which is shown to be tubular, and which has a reduced neck **12** extending from one end and formed with external threads **13** for engagement with threads (not shown) within a closing or sealing cap (FIG. 1). In accordance with this invention, the container **11** is formed of a resiliently deformable or flexible plastic material, for example, soft polyethylene, and at least the side wall of the casing has its thickness dimensioned so that the casing can be easily squeezed to reduce the interior volume thereof.

The casing **11** is intended to contain a substantial quantity of a liquid medicinal substance, for example, an antiseptic solution, and, in the embodiment of the invention being described, the antiseptic solution or other liquid medicinal substance saturates or impregnates an absorbent body **15** (FIGS. 2 and 4) which substantially fills the interior of casing **11**. The absorbent body **15** may be conveniently formed of felted cellulose fibres and is inserted axially into casing **11** through the end of the latter remote from reduced neck **12**, whereupon such end of casing **11** is closed by an end wall **16** (FIG. 2) which may be spin-welded or ultrasonically welded to casing **11**.

The applicator **10** further includes an elongated wick member **17** formed of a compressed body of felted absorbent fibres, and which extends axially through neck **12**. The wick member **17** is dimensioned longtiudinally so that, when its inner end is in intimate contact with absorbent body **15**, for example, pressed into the adjacent end of body **15**, as shown on FIG. 2, the opposite end of the wick member projects substantially beyond neck **12**. By reason of the contact of the inner end of wick member **17** with absorbent body **15**, the wick member receives liquid medicinal substance from the body **15** and transmits such liquid substance, by capillary action, along wick member **17** to the outer projecting end of the latter. Thus, the outer projecting end of wick member **17**, which may be cut obliquely, as shown, or given any other desired configuration, can be contacted with a scraped, abraded or cut area of the skin surface to paint such area with the antiseptic solution or other liquid medicinal substance transmitted by capillary action through the wick member.

By reason of the resiliently deformable character of the material forming the casing **11**, which permits squeezing of the latter, it is possible to control the rate of flow of the antiseptic solution or other liquid medicinal substance through wick member **17** and onto the affected area. When casing **11** is squeezed to reduce its interior volum and thereby create an elevated pressure therein, such elevated pressure promotes an increased rate of flow of the liquid medicinal substance through wick member **17** and onto the affected skin area contacted by the outer end of the latter.

As shown particularly on FIGS. 2 and 3, the wick member **17** may be advantageously held in a sleeve or tubular holder which is frictionally retained in the bore of neck **12** and which has a rim **19** at its outer end for limiting the extension of sleeve **18** into the neck. The rim **19** is preferably undercut so that the user's fingernails can engage between the rim **19** and the adjacent end edge of neck **12** to facilitate the removal of the sleeve or holder **18** and its wick member **17** from the neck of casing **11**. The removed wick member can be easily cleaned, for example, by being held under a water tap or by submersion in a sterilizing solution, so as to remove coagulated blood, dirt, grease or other foreign substances therefrom. The removability of the wick **17** further permits replacement of the same, for example, when it is desired to change the shape of the outer end or operative tip thereof.

Alternatively, as shown on FIG. 5, the sleeve or holder **18** may be omitted, and the wick member **17** is then cross-sectionally dimensioned so as to engage closely in, and be frictionally held directly in the bore of neck **12**.

In either case, that is, whether the wick member **17** is mounted in a sleeve or holder **18** frictionally held in neck **12** or the wick member is mounted directly in the neck **12**, the wick member is preferably given a polygonal cross-sectional shape, for example, a rectangular cross-section as shown on FIG. 3, so that gaps or passages **20** are defined between the flat sides of the wick member and the adjacent cylindrical surface of the sleeve **18** or neck **12**. Such passages **20** open to the atmosphere at the outer or projecting end portion of the wick and serve to vent the interior of casing **11** to the atmosphere.

As shown on FIG. 4, the interior surface of casing **11** is preferably formed with axially extending ribs **21** establishing limited areas of contact of the wall of casing **11** with the absorbent body **15** therein. Passages **22** are defined between the adjacent ribs **21** so as to establish substantial communication between the closed end portion of the casing and the venting passages **20** running along wick member **17**. The ribs **21** perform the further function of localizing the pressures applied to the absorbent body **15**, when the casing **11** is squeezed, so as to promote the expressing of the liquid medicinal substance from the body **15** for accelerated flow thereof through wick member **17**. Such accelerated flow of the liquid medicinal substance occurs not only through the wick member **17** but also over the surfaces of the latter through the gaps **20**. Thus, by squeezing the resiliently deformable casing **11**, it is possible to apply substantial quantities of the antiseptic solution or other liquid medicinal substance to the affected skin areas.

Referring now to FIG. 6, it will be seen that, in an applicator **10***a* in accordance with another embodiment of this invention, the liquid medicinal substance is contained as a free body of liquid L within the container **11***a* of resiliently deformable plastic, rather than saturating or impregnating an absorbent body, as in the previously described embodiments. The container **11***a* is initially closed only at one end thereof, as by an end wall **16***a*, so that rapid filling of the container with the liquid L may be conveniently effected through the other end of the container. Such other end of the container is closed,

after the filling thereof, by a head **23** which is permanently secured to container **11***a* so as to form an integral part thereof. The permanent attachment of the head **23** to the container **11***a* may be effected by spin-welding, in which case, as shown particularly on FIG. 8, the container **11***a* and head **23** are preferably provided with cooperating rabbeted edges as at **24**. Alternatively, the head may be permanently joined to the container by ultrasonic sealing or welding, in which case, as shown particularly on FIG. 7, the head **23***a* and container **11***b* have axially telescoping portions which are respectively formed with a circumferential groove and a mating rib of V-shaped cross-section, as at **25**, so as to channel the sound waves to the desired joint or seal area. The head **23** or **23***a* includes a neck **12***a* which, as before, may be formed with external threads **13***a* for the removable attachment of a cap thereon. A partition **26** extending across the head **23** or **23***a* so as to be disposed adjacent the inner end of the wick member **17***a* which is mounted in the neck **12***a* and projects from the latter. The wick member **17***a* may be mounted directly within the neck **12***a*, as shown on FIGS. 7 and 8, or the wick member may be held in a sleeve or holder **18***a* which is frictionally retained in the neck **12***a* to facilitate the removal and cleaning of the wick member.

The partition **26** adjacent the inner end of wick member **17***a* has a minute opening **27** therein, for example, an opening with a diameter of .013 inch, so that normally the surface tension of the liquid medicinal substance L is sufficient to prevent the flow of the liquid substance through opening **27** and into wick **17***a* for capillary transmission by the latter to its exposed or projecting tip. However, when the resiliently deformable casing **11***a* is squeezed, the increased pressure within the casing drives the liquid medicinal substance through opening **27** for transmission by wick **17***a* to the affected skin area.

As in the first described embodiment of the invention, the wick member **17***a* preferably has a polygonal cross-section so as to define passages **20***a* (FIGS. 7 and 8) between the flat sides of the wick member and the cylindrical surface of the neck **23** or **23***a* or of the sleeve **18***a* in which the wick member is mounted. Such passages **20***a* serve the dual function of venting the interior of casing **11***a* to the atmosphere, by way of the opening **27**, thereby permitting the casing **11***a* to resiliently return to its original shape after the squeezing thereof, and further of permitting additional flow of the liquid medicinal substance through the passages **20***a* around wick member **17***a* when the casing **11***a* is squeezed extensively. Thus, the rate of flow of the antiseptic solution or other liquid medicinal substance through and over the wick member to the affected skin area can be regulated or controlled by varying the degree of squeezing of the resiliently deformable casing.

As shown on FIGS. 6 and 7, the neck **12***a* may be formed with an internal shoulder **28** spaced from the partition **26** so as to limit the insertion of the wick member **17***a* and sleeve **18***a*, or of the wick member alone, into the neck **12***a*, and thereby ensure that a space **29** will remain between the inner end of the wick member and the partition **26**. Such space **29** ensures that the wicking or capillary action of the wick member **17***a* will not be effective to draw the liquid medicinal substance through the opening **27** of partition **26** when the casing is not being squeezed. However, as shown on FIG. 8, the wick member **17***a* may be inserted in the neck **12***a* so as to abut directly against the partition **26** without inadvertently drawing liquid through the opening **27** provided that the partition **26** is of sufficient thickness to maintain spacing between the meniscus of the liquid extending across the inner end of opening **27** and the adjacent inner end surface of the wick member.

The liquid medicinal substance contained in the applicators embodying this invention may have any desired formulation provided that the same does not result in clogging of the wick member. Where the liquid medicinal substance is an antiseptic solution, it is particularly desirable that such solution include substantial amounts of acetone or some other similar solvent for grease, oil and dirt, thereby to enhance the cleansing action of the applicator when the wick member is used for scrubbing or cleaning a scrape, cut or other wound to which the antiseptic solution is being applied. The following specific examples of antiseptic solutions are merely illustrative of liquid medicinal substances that may be employed in applicators embodying this invention.

Example I

An antiseptic solution consisting of, for each 100 cc. of volume thereof, 0.1 gram thimerosal, 52.5 cc. alcohol, 15 cc. acetone, 0.1 gram mono-ethanol amine, and the balance distilled water.

Example II

An antiseptic solution consisting of, for each 100 cc. of volume thereof, 2 grams merbromin, 10 cc. acetone, 0.25 gram iso-octylphenoxypolyethoxyethanol, and the balance distilled water.

Example III

An antiseptic solution consisting of, by volume, 0.5% methyldenzethonium chloride, 4.0% alcohol, 0.35% iso-octylphenoxypolyethoxyethanol, 0.1% chlorthymol, and 95.05% distilled water.

Example IV

An antiseptic solution consisting of, for each 100 cc. of volume thereof, 2 grams powdered iodine, 2.5 grams sodium iodide, 5 cc. acetone, 50 cc. alcohol, and the balance distilled water.

Although illustrative embodiments of this invention have been described in detail herein with reference to the accompanying drawing, it is to be understood that the invention is not limited to those precise embodiments, and that various changes and modifications may be effected therein by one skilled in the art without departing from the scope or spirit of the invention, except as defined in the appended claims.

What is claimed is:

1. A medicinal applicator comprising a hollow casing of resiliently deformable material having on opening at one end, a liquid medicinal substance contained in said casing, an absorbent wick member projecting axially through said opening and being frictionally retained in the latter for the capillary transmission of said liquid medicinal substance therethrough to a desired area of application at a flow rate which is accelerated by squeezing of said resiliently deformable casing, and means which, together with the surface of said wick member, define passages therebetween extending along said wick member to vent the interior of said casing to the atmosphere and to supplement the capillary transmission of said medicinal substance upon squeezing of the casing.

2. A medicinal applicator as in claim **1**; wherein an absorbent body substantially fills the interior of said casing and has said liquid medicinal substance absorbed therein, said absorbent body extending into contact with the inner end of said wick member so that the latter draws the liquid medicinal substance from the absorbent body.

3. A medicinal applicator as in claim **2**; wherein said casing has internal ribs engageable with said absorbent body to apply relatively intensive pressure to localized portions of the absorbent body in response to squeezing of said casing.

4. A medicinal applicator according to claim **1**;

wherein said means is constituted by a neck defining said opening of the casing, the cross-sectional configurations of said wick member and of the inner surface of said neck being substantially different to define said passages therebetween.

5. A medicinal applicator according to claim 1;
wherein said casing has a neck defining said opening at one end, and said means includes a tubular sleeve having said wick member extending therethrough, said sleeve being frictionally held in said neck and the cross sectional configurations of said wick member and of the inner surface of said sleeve being substantially different to define said passages therebetween.

6. A medicinal applicator as in claim 1; wherein said resiliently deformable material of the casing is soft polyethylene.

7. A medicinal applicator as in claim 1; wherein said casing has a partition extending thereacross adjacent the inner end of said wick member, said partition having a minute opening extending therethrough so that the surface tension of said liquid medicinal substance normally prevents the flow thereof through said minute opening into said wick member and said passages and said flow is achieved only upon squeezing of said casing.

8. A medicinal applicator as in claim 7; wherein said minute opening has a diameter of approximately .013 inch.

9. A medicinal applicator as in claim 7; wherein said inner end of the wick member abuts against said partition.

10. A medicinal applicator as in claim 7; wherein said inner end of the wick member is spaced from said partition.

11. A medicinal applicator as in claim 1; wherein said liquid medicinal substance is an antiseptic solution consisting of, for each 100 cc. of volume thereof, 0.1 gram thimerosal, 52.5 cc. alcohol, 15 cc. acetone, 0.1 gram monoethanol amine, and the balance distilled water.

12. A medicinal applicator as in claim 1; wherein said liquid medicinal substance is an antiseptic solution consisting of, for each 100 cc. of volume, 2 grams merbromin, 10 cc. acetone, 0.25 gram iso-octylphenoxypolyethoxyethanol, and the balance distilled water.

13. A medicinal applicator as in claim 1; wherein said liquid medicinal substance is an antiseptic solution consisting of 0.5% methyldenzethonium chloride, 4.0% alcohol, 0.35% iso-octylphenoxypolyethoxyethanol, 0.1% chlorthymol, and 95.05% distilled water, all proportions being by volume.

14. A medicinal applicator as in claim 1; wherein said liquid medicinal substance is an antiseptic solution consisting of, for each 100 cc. of volume thereof, approximately 2 grams powdered iodine, 2.5 grams sodium iodide, 5 cc. acetone, 50 cc. alcohol, and the balance distilled water.

15. An applicator for a liquid medicinal substance comprising a hollow casing of resiliently deformable plastic material having an opening at one end and being adapted to contain a quantity of the liquid medicinal substance to be applied, an absorbent wick member projecting axially through said opening and being frictionally retained therein for the capillary transmission of liquid medicinal substance from within the casing to the outer end of said wick member for application to a desired area, and means which, together with the surface of said wick member, define passages therebetween extending along said wick member to vent the interior of said casing to the atmosphere and to supplement the transmission by capillary action through the wick member, said transmission of the liquid medicinal substance being accelerated by squeezing of said resiliently deformable casing.

16. An applicator according to claim 15;
wherein said means is constituted by a neck defining said opening of the casing, the cross-sectional configurations of said wick member and of the inner surface of said neck being substantially different to define said passages therebetween.

17. An applicator according to claim 15;
wherein said casing has a neck defining said opening at one end, and said means includes a tubular sleeve having said wick member extending therethrough, said sleeve being frictionally held in said neck and the cross-sectional configurations of said wick member and of the inner surface of said sleeve being substantially different to define said passages therebetween.

18. An applicator as in claim 15; wherein said casing contains an absorbent body adapted to be saturated with the liquid medicinal substance, and the inner end of said wick member extends into contact with said absorbent body to receive the liquid medicinal substance therefrom.

19. An applicator as in claim 15; wherein said casing has a partition therein adjacent the inner end of said wick member, said partition having a minute opening therein through which liquid medicinal substance can flow under the influence of an increased pressure in the casing resulting from squeezing of the latter.

References Cited

UNITED STATES PATENTS

1,705,256	3/1929	Krusi	128—269
2,361,647	10/1944	Nyden	222—92
2,636,644	4/1953	Taylor	206—56
3,227,319	1/1966	Rosier	222—92

ADELE M. EAGER, *Primary Examiner.*