March 7, 1950 E. HAECKER 2,499,824

EDGE LIGHTED SIGN

Filed Oct. 17, 1947

Fig. 5.

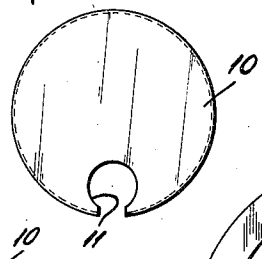

Fig. 1.

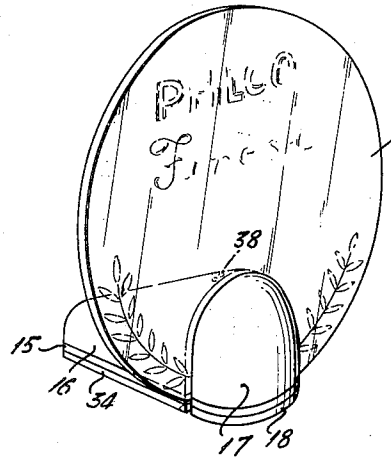

Fig. 4.

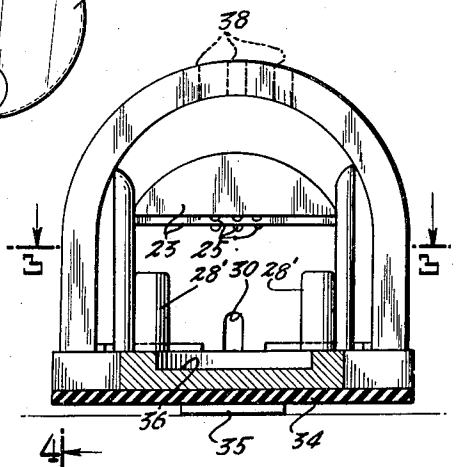

Fig. 2.

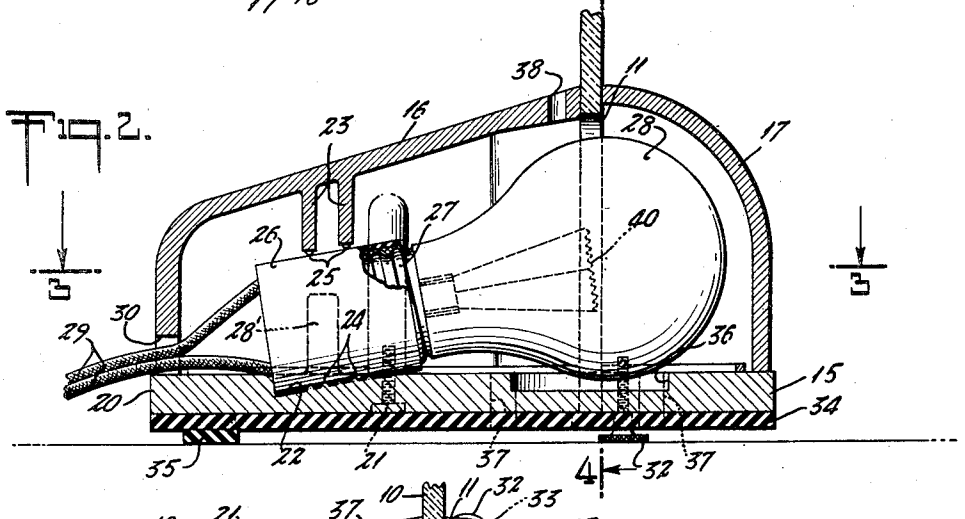

Fig. 3.

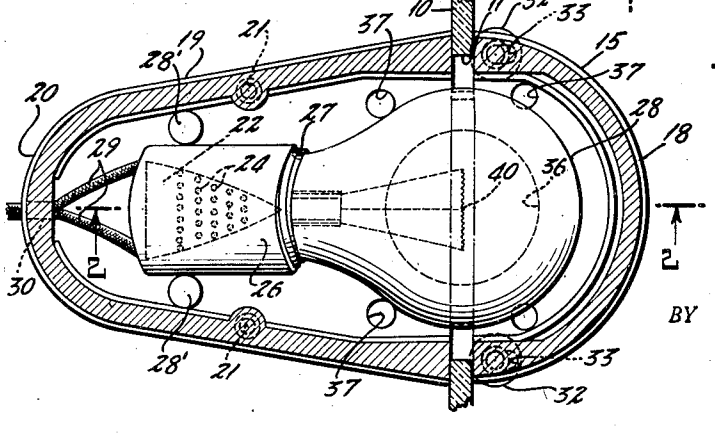

INVENTOR.
ERNEST HAECKER

BY

John M. Cook
ATTORNEY

Patented Mar. 7, 1950 2,499,824

UNITED STATES PATENT OFFICE

2,499,824

EDGE LIGHTED SIGN

Ernest Haecker, Philadelphia, Pa.

Application October 17, 1947, Serial No. 780,349

3 Claims. (Cl. 40—130)

1

The present invention relates to edge-lighted signs and is more particularly directed toward signs adapted to be lighted by a single incandescent lamp the axis of which is substantially normal to the plane of the panel forming the edge-lighted sign.

It has heretofore been customary in the manufacture of edge-lighted signs, to provide lighted panels of considerable length placed over, under, or alongside lamp boxes also of considerable length. One looking at such a sign from the front must, therefore, have a large amount of lamp box area in the field of view so that the attractiveness of the sign is impaired, and the useful area for sign purposes reduced. Furthermore, such lamp boxes on account of the size employed, contribute substantially to the cost of manufacture of the signs.

According to the present invention the edge-lighted signs are designed so that the projected area of the lamp housing in the field of view of the observer of the sign, is reduced to a minimum, it being only a little larger than the lamp bulb itself used in the sign.

According to the present invention almost the entire body of the lamp housing is to the rear of the sign proper and is out of view and unobtrusive. Where the sign is intended for mounting on a flat horizontal surface the housing affords a base or support of sufficient area to hold the sign upright.

The accompanying drawings show, for purposes of illustrating the present invention, an embodiment in which the invention may take form, it being understood that the drawings are illustrative of the invention rather than limiting the same.

In these drawings:

Figure 1 is a perspective view of an edge-lighted sign employing a circular sign panel and adapted for support above a table top or the like;

Figure 2 is a longitudinal sectional view taken on the line 2—2 of Figure 3;

Figure 3 is a horizontal sectional view taken on the line 3—3 of Figure 2;

Figure 4 is a sectional view taken on the line 4—4 of Figure 2, the panel being omitted; and

Figure 5 is a face view of the panel.

The sign illustrated in the drawings employs an indicia bearing transparent panel 10 here shown as circular in form. It may be of any other suitable shape and is preferably made of transparent plastic such as methyl methacrylate provided with rearwardly beveled periphery and

2

sign idicia engraved into it on the back side. The panel shown has an opening 11 of keyhole shape.

The panel is carried by a housing formed of three pieces of molded plastic material, namely, a base 15, a rear cover 16 and a front cover 17. The portion of the base below the front cover 17 is of semi-circular configuration shown at 18 while the portion of the base below the rear cover member 16 tapers generally rearwardly as indicated at 19 and has a rounded end as indicated at 20. The rear cover 16 is secured to the base 15 by screws indicated at 21—21. The upper rear surface of the base plate 15 is provided with a socket receiving seat or depression 22, while the end face of the cover member 16 is provided with ribs 23. These parts are provided with small bumps 24 and 25 adapted to clampingly engage the lower and upper surfaces of the insulating band 26 received about the shell contact of a lamp socket 27 so as to hold the socket against rotation when the lamp bulb 28 is inserted or removed. The socket is kept in alignment by posts 28' extending upwardly from the base and tightly engaging the sides of the socket. The wires 29 for supplying current to the lamp pass through a small slot 30 in the cover member 16.

The front cover member 17 is secured to the base plate by thumb screws 32 which pass through elongated slots 33 in the base. A cushioning pad 34 may, if desired, be secured to the bottom of the base plate 15 by adhesive and this cushion pad may be provided with a foot 35 at the rear. This foot and the two screws 32—32 may provide a suitable support for the entire sign.

The filament of the lamp bulb 28 is indicated at 40. This lamp is the usual loop type filament in which the plane of the filament is at right angles to the axis of the lamp and the parts are so proportioned that the filament is directly in line with the transparent panel 10 so that the rays emitted in the plane of the filament reach the panel. In order to reduce the vertical height of the housing the base is provided with a recess 36 which accommodates the bottom part of the lamp bulb. The base is provided with holes 37—37 and the rear cover plate with holes 38 to facilitate ventilation.

It is obvious that various arrangements utilizing the right angle relation of lamp axis and plane of the lighted panel with the lamp filament in the plane of the lighted panel, may be employed. The signs may be of a nature to be suspended with

the panel below the light source instead of supported on a flat surface as indicated in the drawings or the lamp may be centrally carried in a panel extending above and below the lamp as well as to the right and left of the lamp.

Since it is obvious that the invention may be embodied in other forms and constructions within the scope of the claims, I wish it to be understood that the particular form shown is but one of these forms, and various modifications and changes being possible, I do not otherwise limit myself in any way with respect thereto.

What is claimed is:

1. A sign comprising a base plate, a rear cover member, a front cover member, the cover members being detachably secured to the base and separated by a vertical slot, a transparent sign panel carried in the slot and extending outwardly therefrom and having edge lightable indicia, a lamp socket clamped between the base and rear cover members with its axis at substantially right angles to the plane of the panel, and an incandescent lamp bulb in the socket with its filament substantially in the plane of the panel, the panel having a hole to accommodate the lamp bulb.

2. A sign as claimed in claim 1, wherein the base and rear cover members have projections frictionally engaging the socket to prevent rotation as the lamp is threaded into and out of the socket.

3. A sign as claimed in claim 1, wherein the cover members have vertical side walls up to substantially the level of the center of the lamp filament and generally circular upper walls.

ERNEST HAECKER.

REFERENCES CITED

The following references are of record in the file of this patent:

UNITED STATES PATENTS

Number	Name	Date
1,435,002	Goodwin et al.	Nov. 7, 1922
2,097,625	Langlotz	Nov. 2, 1937
2,272,040	Muldoon	Feb. 3, 1942

FOREIGN PATENTS

Number	Country	Date
418,975	Germany	May 10, 1926
817,194	France	May 24, 1937