US00D660698S

(12) United States Design Patent

Dombrowski et al.

(10) Patent No.: US D660,698 S

(45) Date of Patent: ** May 29, 2012

(54) **PACKAGING FOR PERSONAL CARE COMPOSITION**

(75) Inventors: **David Dombrowski**, Liberty Township, OH (US); **George Scott Kerr**, Mason, OH (US)

(73) Assignee: **The Procter & Gamble Company**, Cincinnati, OH (US)

(**) Term: **14 Years**

(21) Appl. No.: **29/408,806**

(22) Filed: **Dec. 16, 2011**

Related U.S. Application Data

(62) Division of application No. 29/354,847, filed on Jan. 29, 2010, now Pat. No. Des. 653,122.

(51) **LOC (9) Cl.** **09-07**

(52) **U.S. Cl.** **D9/448**

(58) **Field of Classification Search** D9/682–694, D9/516–575, 434–454; D6/542; 222/129, 222/135, 153.01, 153.03, 153.04, 153.09, 222/153.11–153.14, 182, 631, 635, 209, 222/211–213, 215, 321.7–321.9, 372, 373, 222/378, 379, 383.1, 384–386, 398, 400.7, 222/400.8, 401, 402.1–402.25, 491, 494, 222/505, 507, 544, 566–575; 215/379–384; 220/669–675

See application file for complete search history.

(56) **References Cited**

U.S. PATENT DOCUMENTS

D16,712	S	5/1886	Underwood	
D74,436	S	2/1928	Hally-Smith	
D182,444	S	4/1958	Sinclair et al.	
D186,860	S	12/1959	Speaker	
2,921,722	A	1/1960	Focht	
3,146,920	A *	9/1964	Benjamin	222/321.7
D210,516	S	3/1968	Mascia et al.	
D210,701	S *	4/1968	Coons	D9/448
D244,008	S	4/1977	Aeschlimann	
D246,892	S	1/1978	East	
4,307,823	A *	12/1981	Heiss et al.	222/633
D328,712	S *	8/1992	Butler et al.	D9/526
D337,527	S	7/1993	Klapwald	
D369,980	S	5/1996	Dinand	
D371,295	S *	7/1996	Wadsworth et al.	D9/448
D372,860	S	8/1996	Lathrop et al.	
D375,051	S	10/1996	Lathrop et al.	
D381,580	S	7/1997	Kokenge et al.	
D383,982	S	9/1997	Tippitt et al.	
5,842,604	A *	12/1998	Stahley et al.	222/95
D406,062	S	2/1999	Brewer	
D421,215	S	2/2000	Crawford	
D445,686	S	7/2001	Danielo et al.	
D457,424	S	5/2002	Lillelund et al.	
D498,646	S	11/2004	Drennow	
D559,682	S *	1/2008	Meeker et al.	D9/448
D569,248	S *	5/2008	Seum et al.	D9/448
D571,204	S *	6/2008	Sweeton	D9/448

(Continued)

FOREIGN PATENT DOCUMENTS

CN	3358196	3/2004

(Continued)

Primary Examiner — Catherine Tuttle

(74) *Attorney, Agent, or Firm* — Carl J. Roof

(57) **CLAIM**

The ornamental design for a package for personal care composition, as shown and described.

DESCRIPTION

FIG. **1** is a perspective view of a package for personal care composition;

FIG. **2** is a side view thereof;

FIG. **3** is a front side view thereof;

FIG. **4** is a back view thereof;

FIG. **5** is a top view thereof; and,

FIG. **6** is a bottom view thereof.

The broken lines are included for the purpose of illustrating portions of the package for personal care composition that form no part of the claimed design.

1 Claim, 2 Drawing Sheets

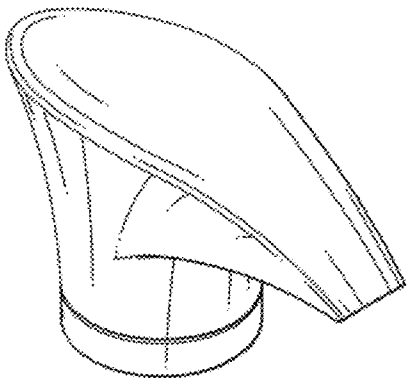

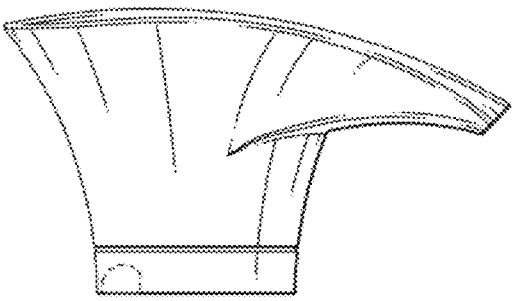

U.S. PATENT DOCUMENTS

D591,612	S *	5/2009	Ames et al.	D9/685
D623,071	S	9/2010	Driskell et al.	
7,798,373	B1 *	9/2010	Wroblewski et al.	222/209
2006/0186139	A1	8/2006	Laidler et al.	
2010/0051650	A1 *	3/2010	Chou	222/383.1
2010/0089946	A1	4/2010	Py	

FOREIGN PATENT DOCUMENTS

EM	000452354-0001	*	2/2006
GB	DES. 2023428		11/1992
GB	DES. 2035513		4/1994
GB	DES. 2088443		6/2000

* cited by examiner

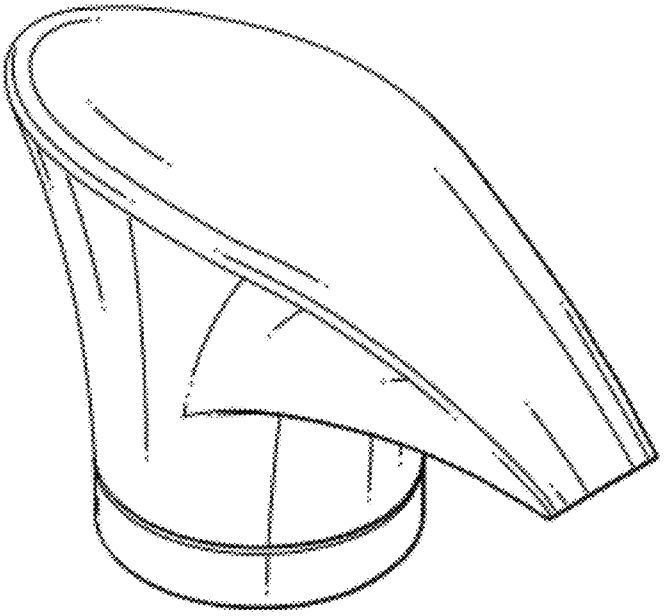

FIG. 1

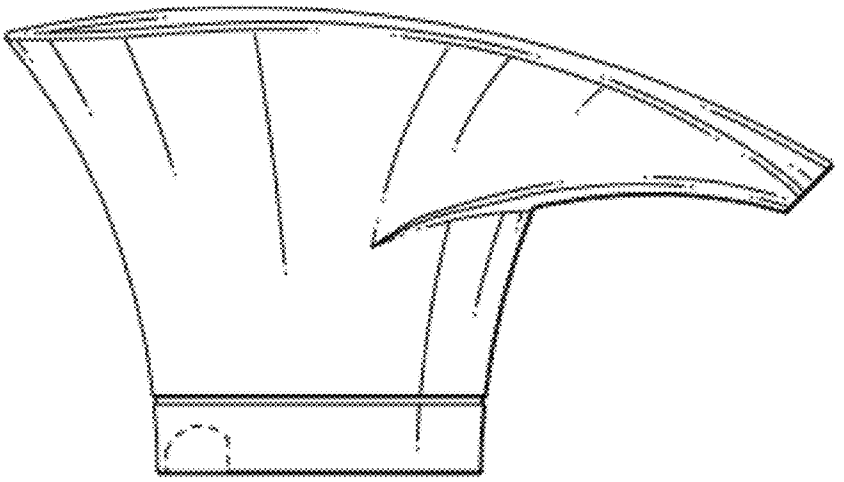

FIG. 2

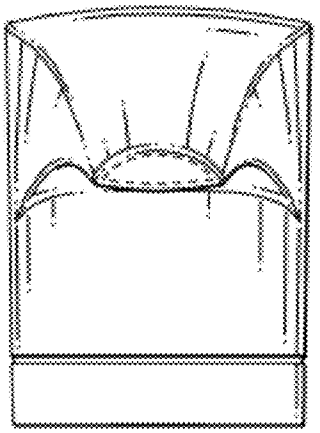

FIG. 3

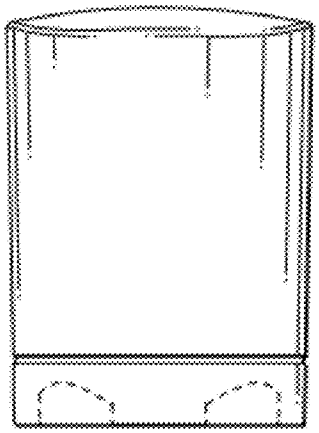

FIG. 4

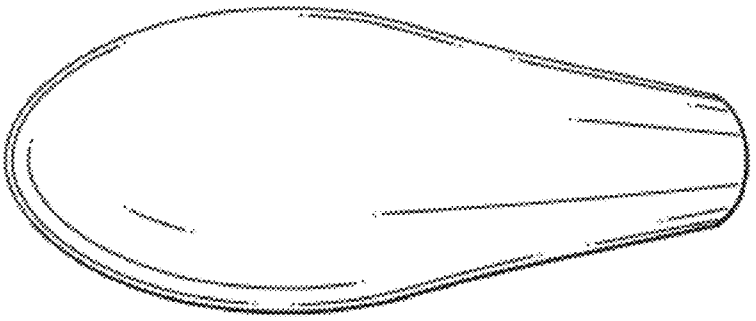

FIG. 5

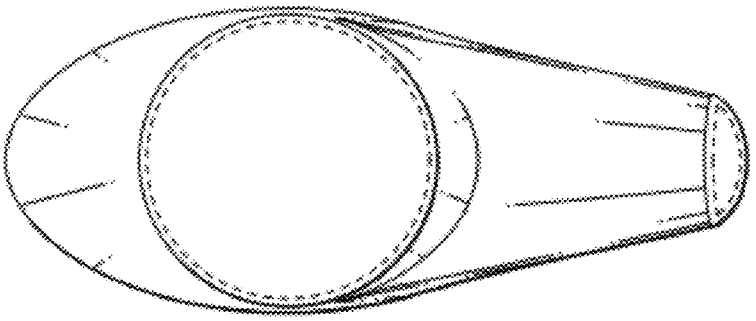

FIG. 6