Oct. 20, 1970 E. KODRA 3,535,057

SCREW COMPRESSOR

Filed Sept. 6, 1968 5 Sheets-Sheet 1

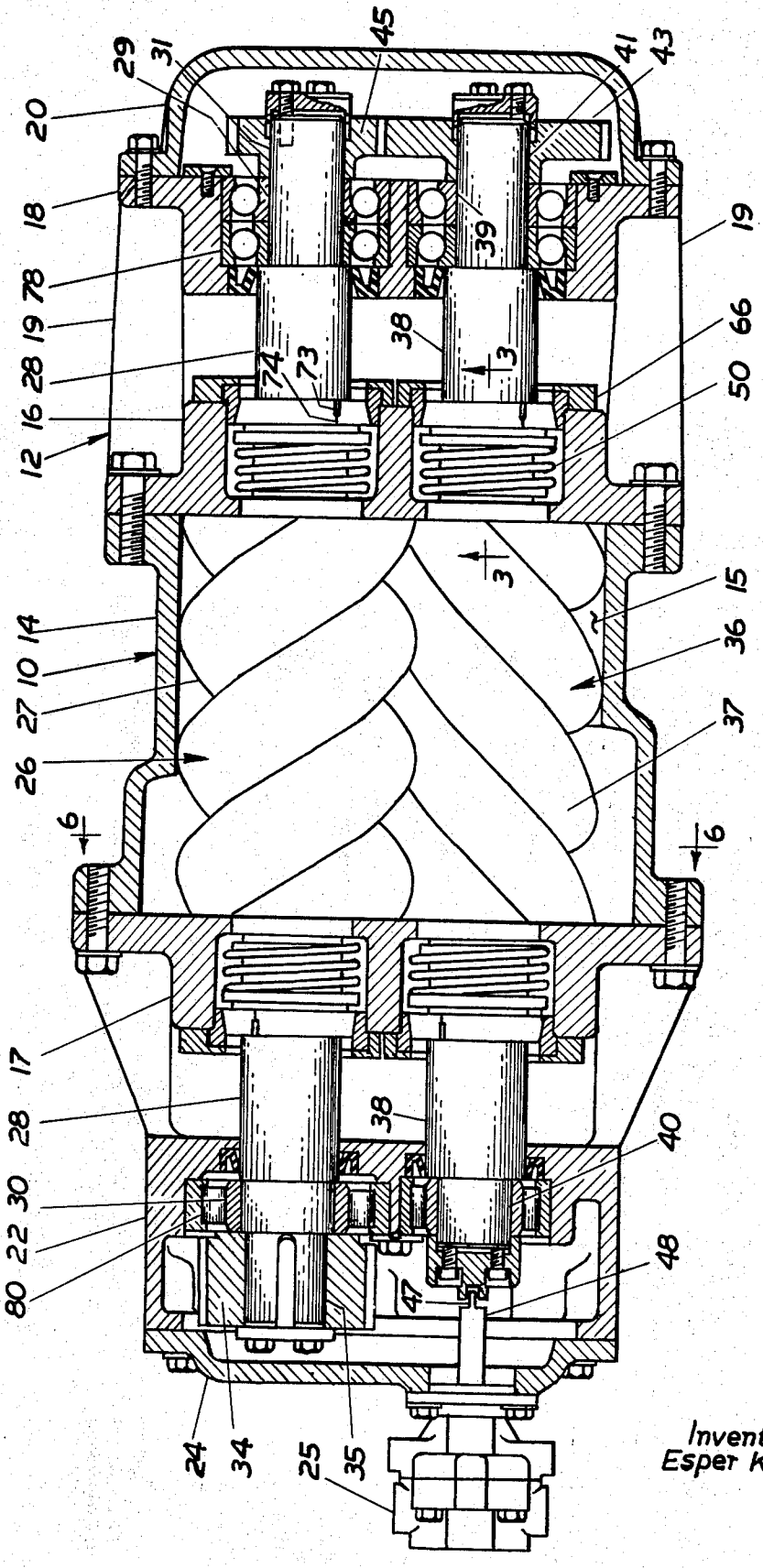

Fig. 1.

Inventor
Esper Kodra.

Oct. 20, 1970 E. KODRA 3,535,057

SCREW COMPRESSOR

Filed Sept. 6, 1968 5 Sheets-Sheet 2

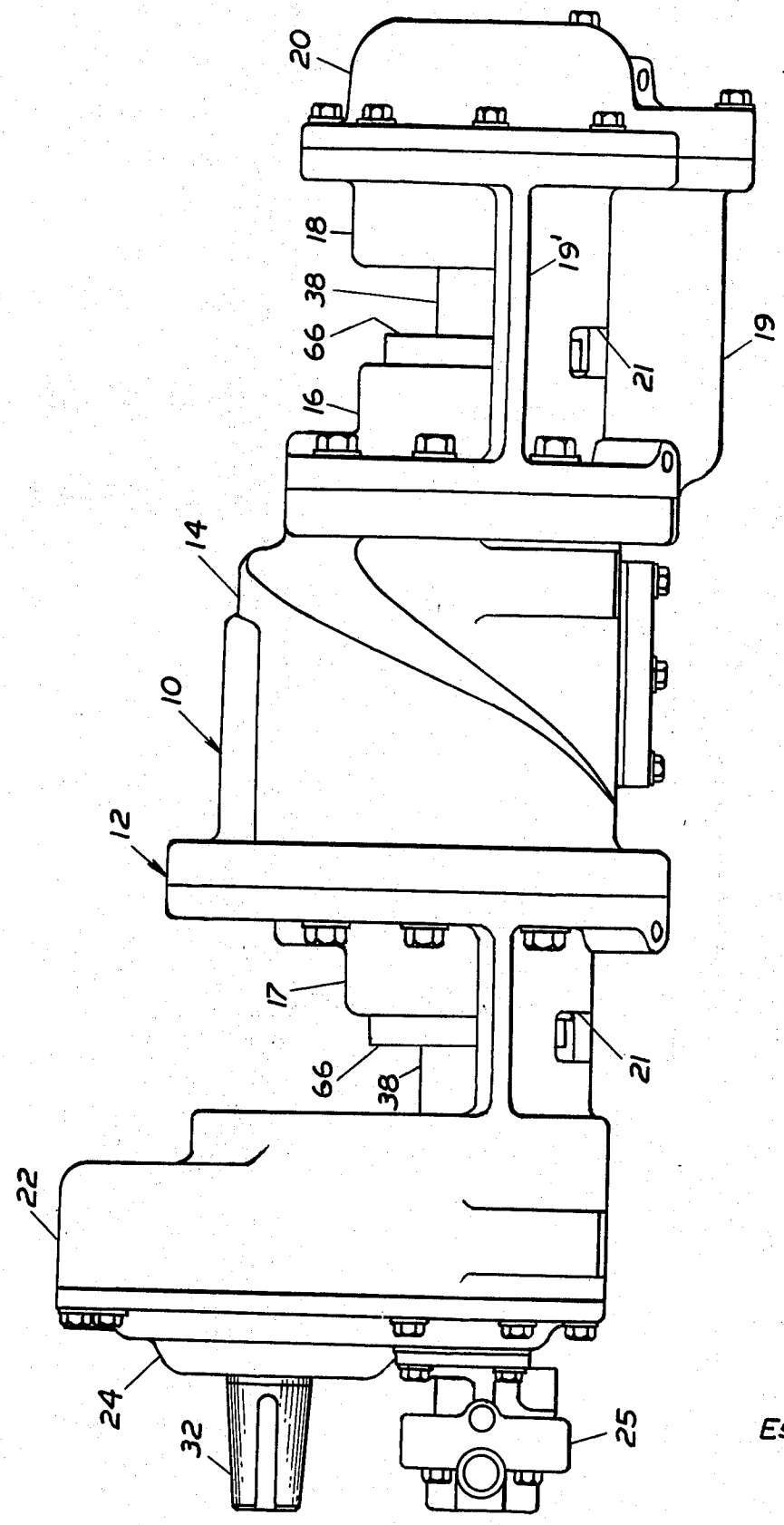

Fig. 2.

Inventor
Esper Kodra.

Oct. 20, 1970 E. KODRA 3,535,057

SCREW COMPRESSOR

Filed Sept. 6, 1968 5 Sheets-Sheet 3

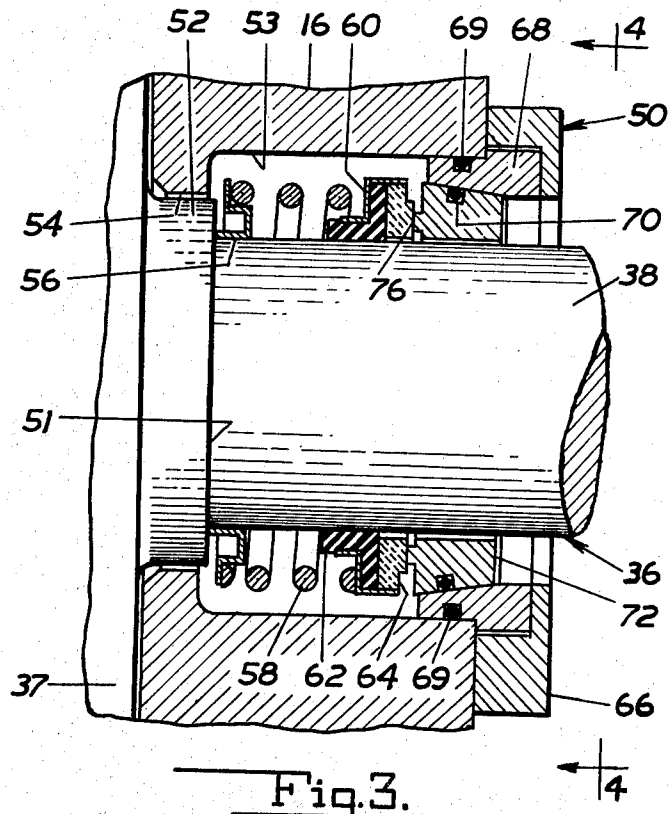

Fig. 3.

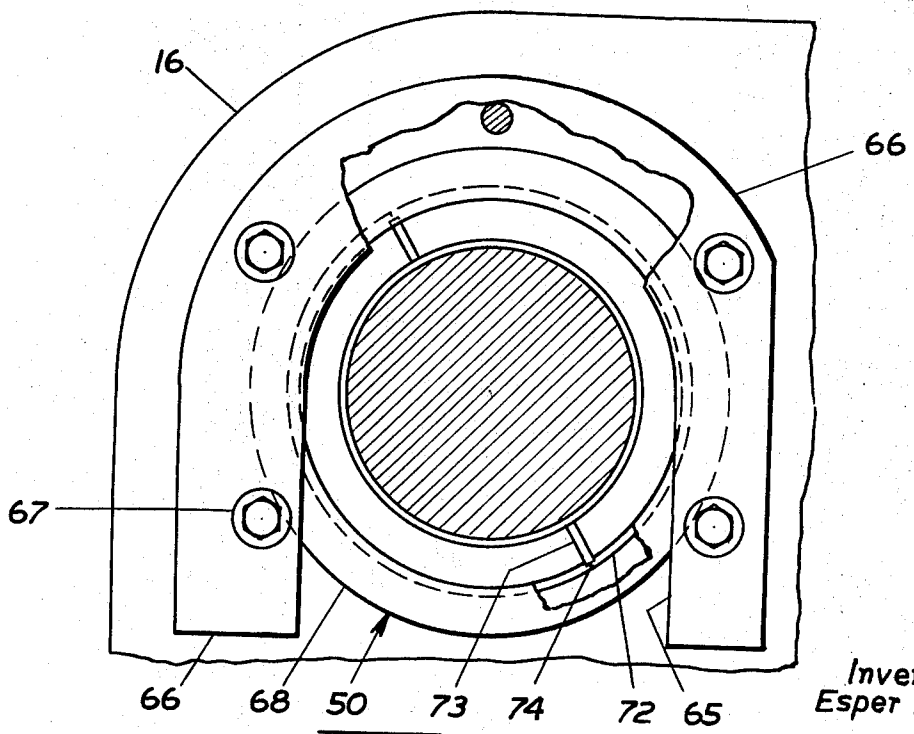

Fig. 4.

Inventor
Esper Kodra.

Oct. 20, 1970 E. KODRA 3,535,057

SCREW COMPRESSOR

Filed Sept. 6, 1968 5 Sheets-Sheet 4

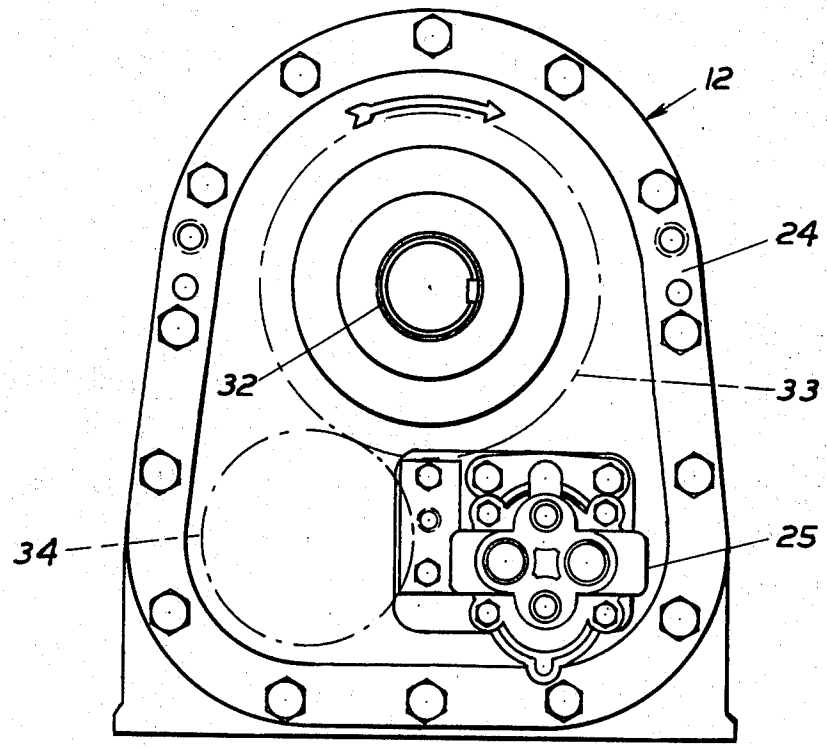

Fig.5.

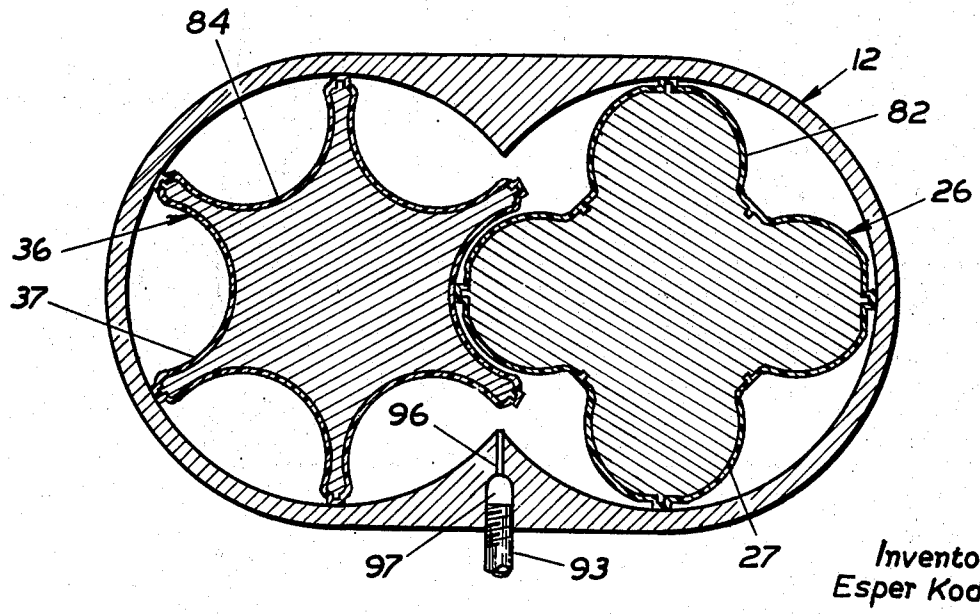

Inventor
Esper Kodra.

Fig.6.

Oct. 20, 1970 E. KODRA 3,535,057

SCREW COMPRESSOR

Filed Sept. 6, 1968 5 Sheets-Sheet 5

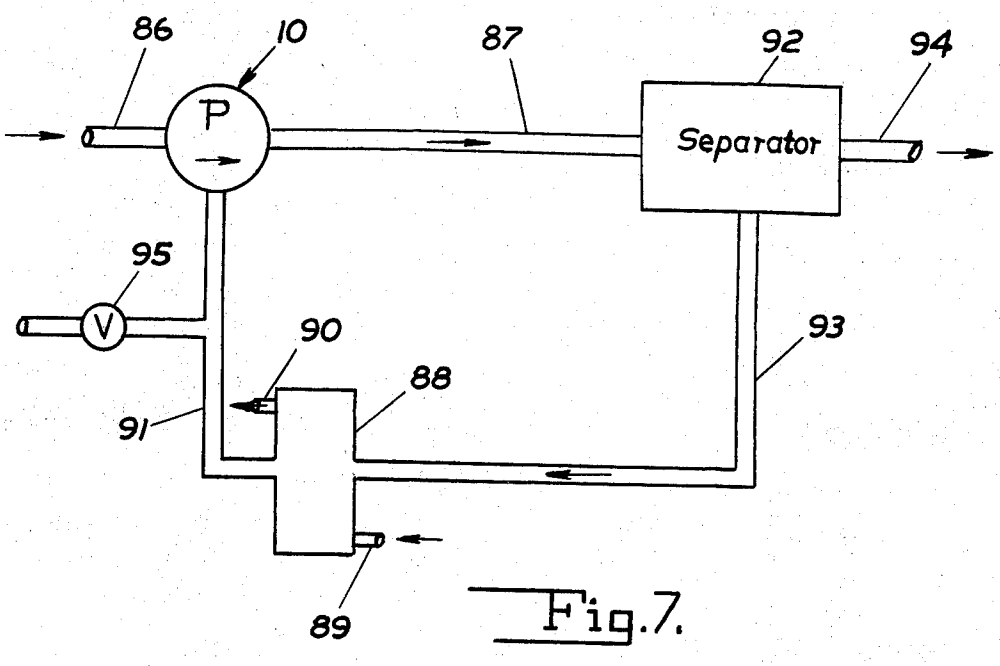

Fig. 7.

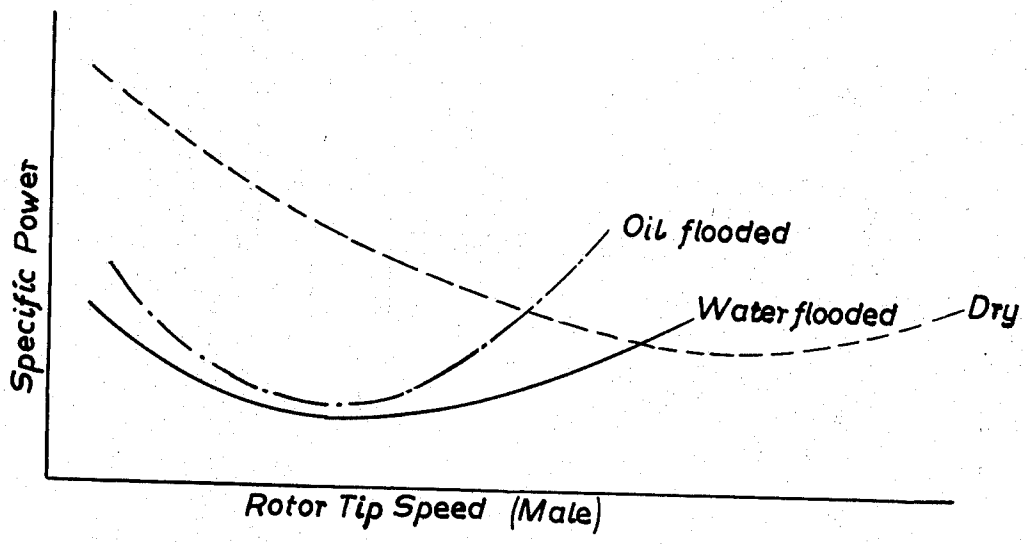

Fig. 8.

Inventor
Esper Kodra.

United States Patent Office 3,535,057 Patented Oct. 20, 1970

3,535,057

SCREW COMPRESSOR

Esper Kodra, 118 Belmont Court,
Michigan City, Ind. 46560

Filed Sept. 6, 1968, Ser. No. 758,032
Int. Cl. F04c 17/12, 29/04
U.S. Cl. 418—1 9 Claims

ABSTRACT OF THE DISCLOSURE

A screw compressor provided with an abradable and/or deformable coating, on one or both rotors to provide for running into a desired close fit for operation as a water flooded compressor and having housings for the screw supporting bearings separate from the screw enclosing housing to prevent cross leakage of injected water and bearing lubricant.

The screw compressor of this invention is of a type well known in the art wherein one or more male helical rotors mates with one or more female helical rotors to provide variable volume compression pockets progressing axially from one end of said rotors to the other to provide positive displacement compression for gaseous media such as air. This compressor is similar to that disclosed, described and shown in U.S. Pat. 3,245,612 (Nillson) except for hereinafter delineated significant differences.

Screw compressors of the general type of this invention have been used for many years and have served the purpose for which they were designed although presenting the following problems at least some of which are solved by the structure according to the present invention:

Dry screw compressors:

(1) Extremely close machining tolerances necessary to reduce leakage along the sealing line;

(2) Extremely high speed operation to reduce leakage along the sealing line;

(3) The mandatory use of timing gears to prevent one rotor from touching another;

(4) High temperature produced due to high speed operation and lack of coolant in the compression chamber will in most cases require two stages with an intercooler for pressures greater than sixty (60) pounds per square inch;

In oil flooded compressors:

(5) Power loss due to churning of oil in the compression chamber;

(6) The presence of oil in the compressed gas;

(7) Relatively high delivery temperature due to the necessity of keeping the discharge temperature above the moisture condensation temperature.

The screw compressor of this invention being provided with rotors coated with an abradable or deformable coating widens the allowable machining tolerances at least in the direction of interferring rotors since the rotors necessarily very closely fitting can, without harm, be in slight interference i.e. have negative clearance therebetween when first installed in the housing and upon being slowly rotated the coating is abraded or deformed to provide the necessary operating clearance after a relatively small number of slow rotations.

Separate housings being provided for the bearings eliminates the possibility of lubricant from the bearings leaking into the compression chamber to contaminate the gaseous compressed product. Such separate housings also make it possible to employ replaceable compression cavity seals wherein the wearing complements are replaceable without removing the rotors from the bearings.

Operation of this compressor as a water flooded machine allows high mass flow to be used which coupled

with the high specific heat of the water will give nearly isothermal compression with the attendant advantages of low specific horse power and longer life for elements of the compressor.

Water flooded operation also assures completely oil free air.

The low viscosity of the water as compared to oil gives lower specific power requirements and allows higher rotational speed than with oil flooded machines.

These and other advantages of the screw compressor of this invention will become more readily apparent upon consideration of the following description and drawings in which:

FIG. 1 is a sectional view taken substantially on the common plane of the rotor center lines of a two rotor screw compressor constructed according to the principles of this invention;

FIG. 2 is a side elevational view of the compressor of FIG. 1;

FIG. 3 is a fragmentary sectional view taken substantially on line 3—3 of FIG. 1;

FIG. 4 is a fragmentary end view taken substantially on line 4—4 of FIG. 3;

FIG. 5 is a left end elevational view of the compressor of FIG. 1;

FIG. 6 is a sectional view taken substantially on line 6—6 of FIG. 1;

FIG. 7 is a schematic representation of a method of employing the compressor of this invention; and

FIG. 8 is a graphic representation of the specific power vs. rotor tip speed relationships of screw compressors.

Referring now to the drawings a preferred embodiment of the compressor of this invention generally indicated at **10** is shown in FIG. 1 as comprising a housing assembly generally indicated at **12** having a chamber **15** within a compression chamber housing **14** mounted between mated end plate and seal housings **16** and **17**, discharge and inlet housings, respectively, to the right and left of chamber housing **14** as viewed in FIG. 1. Spaced outwardly to the right as viewed in FIG. 1 is a separate bearing housing **18** rigidly secured to or preferably made integral with a plurality of axially extended mounting ribs **19** of the discharge seal housing **16** to provide bearing support as hereinafter made plain. The substantially horizontal ribs such as **19'** are provided with openings **21** to drain off accumulated liquids leaking from any of the housings along the shafts **28** and **38**.

To the extreme right as viewed in FIG. 1 the right hand end of the housing assembly **12** is completed by a cup shaped timing gear housing **20** secured to the right hand end of the housing assembly **12** as by cap screws or other threaded retaining means.

To the left of the compression chamber housing **14** the inlet seal housing **17** is rigidly connected to or made integral with a separate bearing and drive gear housing **22** by ribs **19** and **19'** as above described and a cup shaped end plate and oil pump mounting **24** enclose the left hand end of housing assembly **12**. On the outer surface of end plate **24** an oil pump **25** is mounted for purposes to be clear.

Rotatably mounted in the housing assembly **12** is a pair of screw compressor rotors of a type well known in the art being a male rotor **26** and a female rotor **36** upper and lower as viewed in FIG. 1, respectively. The male rotor **26** comprises a helix portion **27** mounted on or made integral with a shaft **28** extending through the seal housings **16** and **17**, respectively, to bearing portion **29** and **30** to the right and left, respectively, of the sealing portions of shaft **28** and extended therebeyond to gear mounting end portions **31** and **35** at the right and left hand ends of the shaft **28**, respectively.

Rotatably mounted within and extending outwardly from the end plate **24** is a drive shaft **32** (see FIG. 2) tapered and provided with a keyway or other means of connection to an internal combustion engine or electric motor or other power means for rotating the shaft **32**. Mounted on the portion of the shaft **32** extending within the drive gear housing **22** is a suitable drive gear **33**, shown only as a pitch line circle in FIG. 5, as being in toothed engagement with a suitable driven gear **34** seen in FIG. 1 as being mounted on shaft **28** in driving engagement with the gear mounting portion **35** of the male rotor shaft **28** so that power applied to the outboard end of the drive shaft **32** is transferred through the drive gear **33** and the driven gear **34** to the helical portion **27** of the shaft **28** to provide powered rotation thereto as required.

The female rotor **36** similarily comprises a helix portion **37** mounted on a rotor shaft **38** extending through the discharge and inlet sealing housing **16** and **17** respectively and including right and left end bearing portions **39** and **40**, respectively, rotatably supported in the bearing housings **18** and **22** with a gear mounting portion **41** on the right hand extreme end thereof. A suitable timing gear **43** is mounted on portion **41** in driving relationship therewith and in toothed engagement with a smaller timing gear **45** mounted on the gear mounting portion **31** of the male rotor shaft **28** in keyed relationship therewith. The timing gears **43** and **45** provide for timed rotation of the male and female rotors **26** and **36** respectively so that when the rotors are 4-lobed male and 6-lobed female as seen in FIG. 6 the 6-lobed female rotor **36** will rotate at only two-thirds the speed of the 4-lobed male rotor **26** to maintain the timing and clearance of the mating rotors **26** and **36** as hereinafter more fully described.

The left hand end of the male rotor shaft **38** is provided with a driving connection shown as a slot and tongue arrangement **47** for supplying power to the shaft **48** of the oil pump **25** in a manner well known in the art. The oil pump **25** is of course suitably connected to the gear and bearing housings and a suitable oil sump (not shown) to furnish circulating oil to the gears and bearings of the compressor **10** in a well known manner.

Mounted on the rotor shafts **28** and **38**, respectively, within the respective seal housings **16** and **17** is, within each housing, a pair of sealing assemblies generally indicated at **50**, shown in enlarged detailed section in FIG. 3 and enlarged end view in FIG. 4. Since the four sealing assemblies **50** are identical and used for identical purposes only that one mounted within the seal housing **16** on the female rotor shaft **38** and shown in section in FIG. 3 will be described. As best seen in FIGS. 3 and 4 the shaft **38** of the female rotor **36** is provided with a shoulder portion **52** adjacent the helix portion **37** thereof, which shoulder portion **52** is rotatably received in a diametrically reduced bore portion **54** of a stepped through bore **53** in the seal housing **16** around the right hand sealing portion of the shaft **38**. The shoulder portion **52** being of a larger diameter than the remainder of the shaft **38** provides a should **51** against which a spring seat collar **56** slidably received by the shaft **38** is snugly seated and held in position by a somewhat compressed helical compression type spring **58** maintained in a partially compressed condition between the spring seat collar **56** and a second seat collar **60** mounted on the exterior of a flanged hollow cylindrical elastomeric bushing **62** snugly received by the shaft **38** and rotatable therewith. Within the spring seat collar **60** and held in contact with the elastomeric bushing **62** is a hard smooth disc shaped element **64** made of smooth impervious material such as ceramic or hardened steel. It is to be understood that with the snug fit of the elastomeric bushing **62** on the shaft **38** and the biasing of the bushing **62** against the disc element **64** and the contact of the spring seat collar **56** with the shoulder **51** the elements so far enumerated i.e. collar **56**, spring **58**, bushing **62**, collar **60** and disc element **64** will all rotate with shaft **38** whenever the compressor of this invention is in operation.

The stationary elements of the seal assembly **50** comprise a U-shaped metal retaining element **66** having a U-shaped two sided angle slot therein providing a generous clearance around the shaft **38** and mounted on the outward facing surface of the seal housing **16** as by cap screw **67** or other retaining means.

Snugly received within the bore **53** and held in place by retaining element **66** is an externally shouldered, internally tapered retainer ring **68** having on its exterior surface a suitable peripheral groove suitably receiving a sealing element such as an O-ring **69** to provide fluid tight relationship between the housing **16** and the retainer ring **68**. The interior bore of the retainer ring **68** is tapered from left to right as seen in FIG. 3, and has a minimum diameter at its right hand end large enough to provide the same generous clearance around the shaft **38** as that provided by the retaining element **66**. Snugly matingly received within the tapered bore portion of the retaining ring **68** is a carbon ring **72** made up of two mated halves through the instrumentality of having been made as a single piece then cut approximately half way through in the axial direction from right to left as seen in FIG. 3. This cut is shown as a kerf **73** in the carbon ring element **72** followed in the same axial direction by a break **74** (see FIG. 1) showing where the original ring element **72** was broken into two halves which are remated in the assembly of the sealing assembly **60**. With the two halves held together by a suitable sealing element such as an O-ring **70** seated in a suitable groove on the tapered surface of ring element **72** the O-ring **70** makes contact with the inside taper of the retainer ring **68** to provide a fluid tight junction between the carbon ring **72** and the retainer ring **68**. The left hand face of the carbon element **72** is shown as having a raised narrow ring surface portion **76** to provide for high pressure contact with the disc element **64** during an initial running in period to establish the proper sealing effect therebetween.

Examination of the elements of sealing assembly **50** as hereinabove described shows that the compression chamber **15** within the housing **14** can communicate with the interior of the bore **53** but that interior of the bore **53** is sealed off from the atmosphere exterior thereto by the elastomeric bushing **62** held in sealing contact against the shaft **38** and against the disc element **64** which although rotating with the shaft **38** is in sealing contact with the carbon ring **72** along the ring surface **76**. The stationary carbon ring **72** is as has been described in sealing contact with the stationary retainer ring **68** in turn in sealing contact with the housing **16** along the interior of the bore **53**. It is thus seen that the only frictional contact subject to relative motion and resultant wear is the polished surface of the ceramic or hard steel disc element **64** against the surface **76** of the carbon element **72**. At this point wear must inevitably take place and when such wear progresses far enough the disc element **64** or the collar **60** can come into undesirable contact with the ring element **68** with consequent damage to both the disc element **64** and the ring **68**. However with a reasonable maintenance schedule of inspection the approach of this condition can readily be ascertained and the following replacement action can be applied. When the carbon ring **72** has become worn to an undesirable extent the cap screws **67** are to be removed allowing the retaining element **66** to be taken off the shaft **38** and out of the way. The ring **68** can then be moved to the right toward the bearing housing **18** far enough so that the worn carbon ring **72** can be moved to the right out of the bore **53** the O-ring **70** removed from around the carbon ring **72** and the worn halves of the carbon ring **72** allowed to fall apart and be discarded. A new carbon ring **72** having been already partially cut through and broken as described for the original carbon ring **72** can be assembled around the shaft **38** and the O-ring **70** placed in the groove around the new carbon

ring **72** to hold the halves in proper relationship while the ring element **68** is brought from the right hand position into contact with the outside of the ring element **72** whereupon, the retaining element **66** being placed over the outside of the ring **68** and pushed up against the outer surface of the housing **16**, replacement of the screws **67** will complete the replacement of the carbon ring **72** without disturbance to the shaft **38** within the various housing portions and an entirely new wearing surface will thus be provided at a minimum expense of down time and labor.

As seen in FIG. 1 the shafts **28** and **38** are supported at the right hand end wherein suitable thrust and radial bearings in double acting pairs on the portions **29** and **39** of shafts **28** and **38** respectively provide both radial and axial stability to the rotor shaft in a well known manner. It is to be noted that the timing gears **43** and **45** are so mounted on the shafts **28** and **38** as to be movable thereon to adjust the mating of the helixes as necessary. The left hand ends of the shafts **28** and **38** are supported in roller bearings **80** having large radial load capacity particularly for the support of shaft **28** on its drive end wherein heavy radial loads due to the toothed engagement of gears **33** and **34** are imposed on the bearing **80** supporting the shaft **28** at the bearing mounting portion **30**.

Due to the separation of the bearing housings **18** and **22** from the chamber housing **14** and with the gaps between the seal housings **16** and **17** and the bearing housings **18** and **22** extending down to a point well below the peripheries of shafts **28** and **38** any leakage of oil from the bearing chambers **18** and **22** or of water from the seal chambers **16** and **17** will be drained through openings **21** to a point of disposal outside of the compressor so that there will be no cross leakage or contamination of oil by water or vice versa. Such effective separation makes it possible to guarantee completely oil free compressed air from the compressor of this invention.

As best seen in FIG. 6 the respective helix portions **27** and **37** of the rotors **26** and **36** are completely enveloped in coatings **82** and **84** respectively of suitable non-metallic material such as Kynar (a registered trademark of Penn Salt Chemicals Corp.), Teflon (a registered trademark of Du Pont) or a suitable epoxy formulation. The particular coating used should have the following characteristics: a dependable metal-plastic bond; good resistance to erosion; resistance to corrosion by water; withstand temperatures of 250° F. without softening; low plastic to plastic cohesion; a coefficient of expansion as near metal coefficient of expansion as possible; and low porosity. Further desirable characteristics are that the material be furnished in reasonable quantities with internal uniformity and uniformity from one batch to another; that the material be non-toxic in all conditions and chemically stable. It is furthermore important that the coating material be resilient to a reasonable degree and beyond such degree should be permanently displaceable, i.e. abradable or deformable, so that when two rotors, at least one being coated, are run in they can at first be in interference with a reasonable amount of resilience to allow them to turn relative to each other and with the displaceable characteristic assuring that interference beyond a certain amount will be non-recurring after the first few turns of the rotors so that they can be run in to sufficient clearance without damaging each other.

It is to be noted with respect to the rotor coating material; it is not necessarily resistant to high temperatures, i.e. above 300° F., nor is it necessary that the coefficient of friction be particularly low or the tensile strength be particularly high when timing gears are used.

The hardness of the coating should be sufficient to resist deformation by high pressure air or water but soft enough to allow stray metallic particles such as filings to be embedded in the coating rather than being retained on the surface to cause damage to the opposite rotor.

It is further to be noted that one of the rotors may well be metal coated as long as such coating would be of a low friction, corrosion resistant nature with the possibility of being displaceable according to the above description.

With coatings meeting the parameters above set forth it is possible to use rotors rough machined to a dimension somewhat smaller than desired for the finished rotor after which one or more layers of coating material is applied to the rotor to bring the size of the rotors up to line for line dimensions with some possible interference. After being so prepared the rotors are to be installed in the compressor housing with gears and bearings adjusted to provide the correct relationship of one rotor to the other. The rotors will then be slowly rotated to provide a run in period during which the coatings might be in interference from one rotor to the other and from rotor to housing with any necessary permanent deformation of the coating taking place during this period. With proper run in of suitably coated rotors there will be developed a very close fit between the rotors and between rotors and housing with less clearance than would normally be developed to machining to usual tolerances.

The reduced clearances developed by such coating and run in methods will allow slower speed with less leakage resulting in lower operating temperature because of less recompression of hot gases from high pressure volumes of the screw pockets leaking into the lower pressure areas.

It is to be noted that in the preferred embodiment shown in FIGS. 1 and 2 timing gears **43** and **45** are indicated as being desirable, however, such timing gears are not absolutely necessary and may be dispensed with in certain embodiments of this invention wherein the coatings have the requisite characteristics to withstand rotor to rotor contact and the amount of water used is sufficient to provide for the driving of one rotor by the other without timing gears intervening. Thus timing gears **43** and **45** do not form an indispensable part of this invention although self-lubricating properties of the coating material will be required if no timing gears are used.

It is to be noted that in addition to allowing wider machining tolerances the coating also prevents metal to metal contact with attendant scoring and galling resulting in serious damage from metal rotor contact in compressors of the prior art.

Operation of the compressor **10** of this invention hereinabove described as a water flooded screw compressor is made possible by the non-corroding nature and the close fitting of the coated rotors. It is obvious that if the rotors at least in the helix portion were not coated the use of water mixed with air thereon would soon cause damaging corrosion intolerable in such a machine. The rotors can be made of some non-corrosive non-ferrous metals rather than being coated to prevent corrosion. Larger clearances must of course be provided in order to avoid any possibility of metal to metal contact. It is further to be noted that the low viscosity of the water makes it necessary to have closer fitting rotors and casing than would be necessary with the higher viscosity oil with which the liquid flooded compressors of prior art are supplied.

A further characteristic of the compressor of this invention making water flooded operation possible resides in the physical separation of the shaft portions devoted to sealing the high pressure cavity from the shaft portions providing for bearing support of the rotors so that the bearings may be bathed in oil while the compression cavity is partially filled with water without any cross contamination of the two liquids.

The use of water flooding made possible by the above described design features of the structure of this invention gives rise to several methods of compressor operation either impractical or completely impossible with either dry compressors or an oil flooded operation.

The first of these methods of operation is schematically represented in FIG. 7 wherein the compressor **10** of this invention represented by the conventional symbol for a pump is suitably connected to atmosphere by an

air intake conduit **86** and in turn communicates through an outlet conduit **87** with a water separator **92** of any suitable type wherein water mixed with air from the compressor **10** can be separated by simple mechanical means. The water separated from the air in separator **92** is returned to the pump **10** through a water conducting conduit **93** communicating between the water catching portion of separator **92** and a heat exchange means **88** suitably supplied with cooling water through inlet and outlet connections **89** and **90** suitably connected to a water supply and disposal means (not shown) and in turn communicating through a conduit **91** with the chamber **15** of the compressor **10**. The separator **92** is also suitably connected to a compressed air receiver or other air receiving and utilizing means (not shown). The conduit **91** also communicates through a valve **95** with a suitable source of makeup water to be used to replace any of the water in this system which might be picked up by the air and passed onward through the connection **94** under conditions of low humidity for example. The conduit **91** communicates with the interior of the chamber **15** within the chamber housing **14** in any suitable manner as for example by injection channels such as a plurality of bores **96** (see FIG. 6) similar to those shown in the above cited Nillson patent (3,245,612, column, lines **10** through **23**) which communicate between the outlet side of chamber **15** along the line of intersection of the intersecting bores of which the chamber **15** is formed and an elongated manifold passageway **97** in turn connected to the conduit **93**.

In operation of the system shown in FIG. 7 with the compressor **10** operated at rated speed, air at atmospheric pressure and temperature of probably 70° F. is taken into the compressor **10** along with a suitable amount of water to give a mass flow ratio of liquid to gas of a suitable selected value from 10 to 1 up to a maximum of 20 to 1. With such high values of mass flow ratio and the high specific heat value of water the mixture of air and water emerging from the compressor **10** through the outlet connection **87** although compressed to perhaps 100 pounds per square inch pressure will be at a slightly elevated temperature of perhaps 90° F. so that the compression has taken place substantially isothermally with a polytropic process exponent of 1.05 to 1.1 as compared to the accepted figure for adiabatic compression of 1.4 and the theoretical exponent of 1.00 for isothermal compression.

It is further to be realized that, if water having a low enough temperature is economically available, the high mass flow ratio will make it possible to achieve completely isothermal compression with an exponent of 1.0 and even to go beyond the isothermal conditions so that some cooling of the air takes place during compression yielding a polytropic process exponent of as low as 0.9 with concomitant increase in compressor efficiency. For purposes of this invention compressor operation under conditions yielding a polytropic process exponent in the range of 0.9 to 1.1 will be specified as substantially isothermal compression.

Within the separator **92** simple mechanical means such as centrifugal action separates the water from the air which passes on through the connection means **94** into a compressed air receiver or other point of use as well known in the art. As shown in FIG. 7 the conduit **93** conducts the water from the separator **92** back to the compressor **10** to enter into the cycle again. The reason for recirculating the water through the conduit **93** and the pump **10** would reside in a desire to prevent the formation of deposits in the compressor with an original filling of distilled water, condensed water from the air stream will supply injection water to the compressor **10**. The water supplied through the inlet conduit **89** of the heat exchanger **88** and exhausted therefrom through the outlet conduit **90** has no requirements for particular purity as it never comes into contact with the air stream and will satisfy the conditions of heat exchange if its temperature is 65° F. or less and there is not enough contamination therein to cause plugging up of the heat exchange passages.

It is to be realized that the use of a closed circulation system through the conduit **93** is not necessary to the operation as long as proper arrangements are made to supply the suitable amount of liquid to the compressor **10** and to separate the water from the air in the separator **92**.

As is evident from the curves shown in FIG. 8 wherein specific power is plotted against male rotor tip speed the higher rotor tip speed of the water flooded compressor as compared to oil flooded operation plus the substantially isothermal compression gives a very low specific power requirement. The substantially isothermal compression holding the delivery temperature of the compressor at a comparatively low value also contributes to better life of the seals than is possible with the higher delivery temperature found in either dry or oil flooded compressor operation. Separation of the water from the air is a simple mechanical process as compared with the complicated thermal or chemical operations necessary to separate oil and the vapors thereof from compressed air furnished by an oil flooded compressor. This low temperature operation means also that the air leaving separator is at a saturation point corresponding to this temperature. This low moisture content can be obtained from other known compressor types only if air is passed through an after cooler. A further point of superiority of water over oil as a flooding agent resides in the fact that a mixture of water and air can never be explosive or even combustible.

A second method of operation of the compressor **10** of this invention is similar to that above described excepting only that the heat exchanger **88** is eliminated and the conduit **93** communicates with a place of water disposal (not shown). Thus, water added through the valve **95** is taken into the compressor in the usual manner and the air water mixture travels to the separator **92** wherein the water is separated therefrom and the air passes on through the conduction means **94** to the place of use of compressed air as before with the separated water being disposed of in any suitable manner. In this second method of operation the temperature of the water air mixture is controlled mainly by the amount and temperature of water added and is allowed to remain at whatever elevated temperature is developed in the compressor, perhaps 90° F. as it passes through the separator and into the receiver. For certain purposes an added 20° or so of temperature rise is not deleterious and water of sufficient purity to be used in direct contact with the air stream is readily and cheaply available so that the added cost of the heat exchanger and the controls therefor are not warranted by the cost of the flow through water being used to flood the compressor in the non-recirculating method.

A preferred embodiment of the compressor of this invention having been hereinbefore described and herewith illustrated it is to be realized that variations in the specific structure are envisioned and contemplated as further embodiments of the principles of this invention. It is therefore respectfully requested that this invention be interpreted as broadly as possible and limited only by the scope of the appended claims.

What is claimed is:

1. In a method of operating a screw compressor to produce compressed gas by use of a compressor having a pair of interfitting screw rotors comprising the steps of supplying a flow of gas to the inlet portion of said rotors, compressing said gas by action of said rotors, discharging said gas from said compressor and delivering said gas to a point of use for said said gas; the improvement comprising supplying a pressure flow of

water to the outlet side of said rotors to provide a mixture of gas and water containing enough water so that said compressing is accomplished without substantial temperature rise.

2. The method of operating a screw compressor as specified in claim 1 including the additional step of separating said water from said gas.

3. The method of operating a screw compressor as specified in claim 2 additionally comprising the step of returning said separated water to said compressor to form at least a portion of said supply for another cycle of operation.

4. The method of operating a screw compressor as specified in claim 3 additionally comprising the step of cooling said separated water before returning said separated water to said compressor.

5. The method of operating a screw compressor as specified in claim 3 or claim 4 wherein said supplying of gas and said supplying of water and said compressing of said mixture take place along a path spaced from and sealed off from the means for rotating and supporting said rotors.

6. The method of operating a screw compressor as specified in any of claims 3 or 4 or 1 wherein said compression of the mixture takes place substantially isothermally with a polytropic process exponent in the range from 0.9 to 1.1.

7. In a screw compressor of the interfitting helical rotor type having at least a pair of such rotors rotatably supported in bearings with respective central helical portions located in a central sealed compression chamber portion of an elongated housing member, the improvement comprising: a shaft portion extending outwardly from each end of each rotor helical portion through high pressure and low pressure ends of said sealed chamber, respectively: each end of each shaft being supported in respective bearing means; at least those of said bearing means at the high pressure end of each shaft being axially spaced from said chamber housing portion and housed in a separate bearing housing portion axially spaced from said chamber portion to prevent cross leakage between said housing portions; replaceable sealing means on said shaft at least adjacent said high pressure end of said chamber portion and located between said chamber portion and said bearing housing portion; said sealing means comprising a radially split wear member interposed between ring shaped relatively rotating seal members.

8. In a screw compressor as specified in claim 7 the improvement as specified in claim 6 further comprising coating means on at least one of said rotors, said coating being non-corrodible by water and permanently displaceable when interference occurs.

9. The screw compressor improvement as specified in claim 7 wherein all of said bearing means are axially spaced from respective ends of said chamber portion and housed in separate bearing housing portions axially spaced from said ends of said chamber housing portion; and said sealing means on said shaft are outwardly adjacent both ends of said chamber housing portion.

References Cited

UNITED STATES PATENTS

1,021,180	3/1912	Clifton.	
1,319,776	10/1919	Kerr	230—143
2,491,677	12/1949	McCulloch	230—141
2,880,676	4/1959	Succop.	
3,073,513	1/1963	Bailey	230—143
3,073,514	1/1963	Bailey et al.	230—143
3,265,293	8/1966	Schibbye	230—143
3,282,495	11/1966	Walls	230—143
3,414,189	12/1968	Persson	230—143
1,409,868	3/1922	Kien	230—205
1,597,411	8/1926	Kinney.	
1,672,571	6/1928	Leonard	230—205
1,673,262	6/1928	Meston et al.	230—141
2,475,550	7/1949	Larsen	277—87

WILLIAM L. FREEH, Primary Examiner

W. J. GOODLIN, Assistant Examiner

U.S. Cl. X.R.

418—85, 201