June 10, 1952 L. F. LYONS 2,599,928

SEAT FOR GOLF CARTS

Filed March 15, 1949

Fig. 1

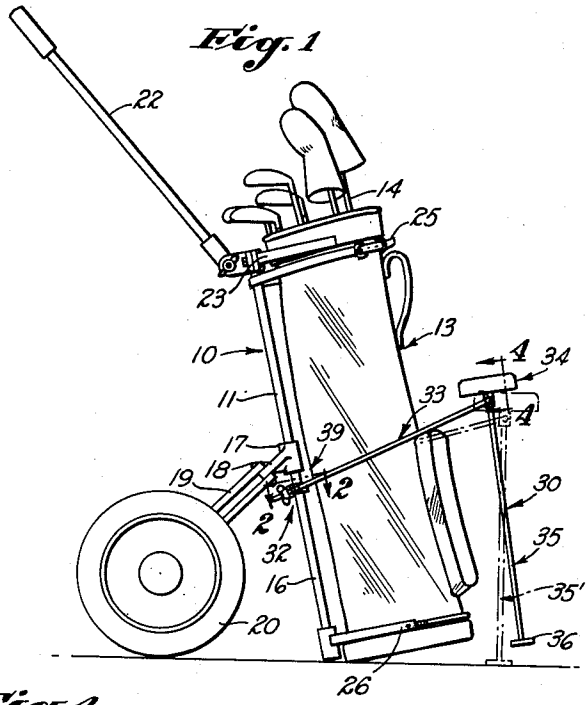

Fig. 2

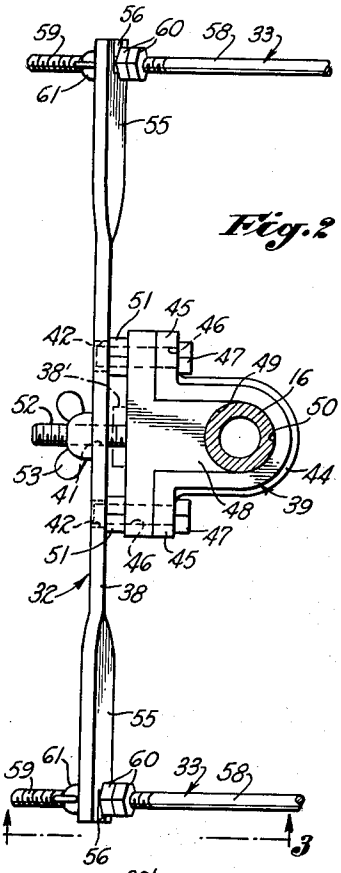

Fig. 4

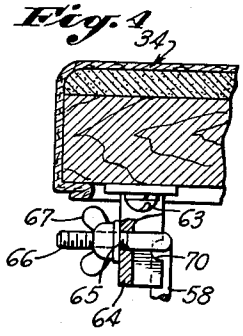

Fig. 5

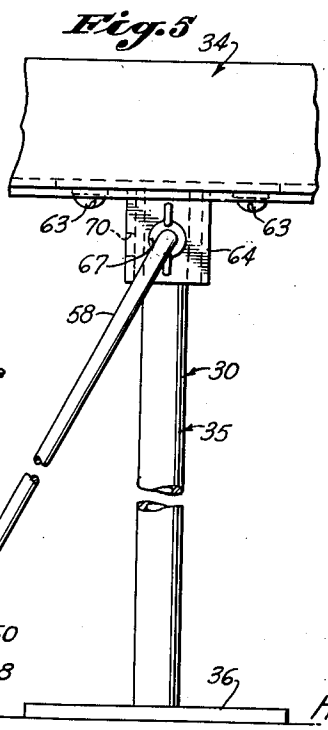

Fig. 6

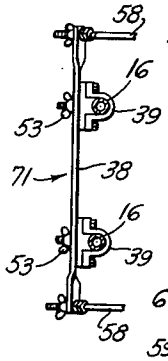

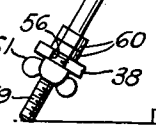

Fig. 3

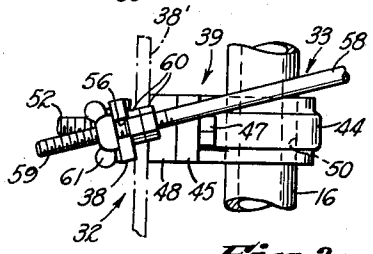

INVENTOR:
LLOYD F. LYONS
BY HIS ATTORNEYS
HARRIS, KIECH, FOSTER & HARRIS
By Ward D. Foster

Patented June 10, 1952

2,599,928

UNITED STATES PATENT OFFICE

2,599,928

SEAT FOR GOLF CARTS

Lloyd F. Lyons, Los Angeles, Calif.

Application March 15, 1949, Serial No. 81,597

10 Claims. (Cl. 155—80)

1

This invention relates to improvements in seats and more particularly to improvements in a demountable seat adapted to be utilized in conjunction with a wheeled vehicle and also to be used as a field seat in the observation of such activities as horse races and track meets.

In order to clearly illustrate the manner of construction and mode of operation of my invention I describe it as being utilized in conjunction with a golf cart but it is, of course, obvious that a seat constructed in accordance with my invention is susceptible of application to other vehicles.

The increased popularity of the game of golf and the resultant shortage of caddies available to assist the player in carrying his golf bag around the course have resulted in the almost universal acceptance of golf carts which are adapted to carry the golf bag of a player and which can be easily pulled across the golf course with a minimum expenditure of energy. However, the crowding of golf courses due to the aforementioned increased popularity of the game has resulted in long waits while the players wait for others and the members of their own group to tee-off. Since the game of golf involves a considerable expenditure of energy and since only a few benches are provided at the tee for the players, the fatigue induced by standing around waiting for his chance to tee-off will frequently tire a player sufficiently so as to adversely affect his game.

It is, therefore, a primary object of my invention to provide a demountable seat for a golf cart which is adapted to be secured to the frame of the cart and which will provide a resting place for the player utilizing the cart when he is delayed at any point upon the golf course.

Golf carts have been provided in the past which embodied, as a part of their integral structure, a seat designed to permit the player to rest while awaiting his change to take part in the game. Such previous devices have been of a rather complex nature and no provision has been made for individuals who already own conventional golf carts.

It is another object of my invention to provide a demountable seat adapted to be attached to a wide vareity of golf carts and which can, therefore, be readily and easily mounted upon golf carts already in use.

It is another object of my invention to provide a demountable seat for a wheeled vehicle, such as a golf cart, which can be removed from the vehicle and utilized to provide a seat for a spectator at various sporting events.

2

An additional object of my invention is the provision of a demountable seat for a golf cart or similar wheeled vehicle which is provided with supporting means which are adapted to be folded into parallelism with the main structure of said seat to facilitate the transportation thereof.

A further object of my invention is the provision of a seat adapted to be utilized in conjunction with a golf cart and which incorporates resilient supporting means adapted to raise the seat from an operative to an inoperative position when the user of the seat removes his weight therefrom.

Another object of my invention is the provision of a demountable seat for a wheeled vehicle which is pivotally mounted upon the supporting means attaching said seat to said wheeled vehicle to permit the disposition of said supporting means in one of a plurality of operating positions in respect to said seat.

A further object of my invention is the provision of a demountable seat for a wheeled vehicle which is pivotally mounted upon resilient, elongated supporting means and which is provided with positioning means adapted to secure said seat in a predetermined position of adjustment in respect to said supporting means when said seat is mounted upon said wheeled vehicle.

An additional object of my invention is the provision of a demountable seat for a wheeled vehicle which is composed of a minimum number of simple parts which can be readily assembled and which can be manufactured and sold at moderate cost.

Other objects and advantages of my invention will be made apparent from the following specification and the accompanying drawing, which is for the purpose of illustration only, and in which:

Fig. 1 is a side elevational view of a conventional golf cart showing a seat constructed in accordance with my invention demountably attached thereto;

Fig. 2 is an enlarged, fragmentary plan view taken from the broken line 2—2 of Fig. 1;

Fig. 3 is a fragmentary, side elevational view taken along the broken line 3—3 of Fig. 2;

Fig. 4 is an enlarged, fragmentary view showing the manner in which the positioning means of the seat cooperates with the supporting means thereof to maintain the seat in a predetermined position of adjustment;

Fig. 5 is an enlarged, fragmentary view showing the manner in which the demountable seat of my invention can be utilized as a self-sustained unit to permit the viewing of various athletic activities; and

Fig. 6 is a fragmentary, plan view showing an alternative embodiment of the mounting means of my invention adapted for use with a golf cart having a double frame structure.

Referring to the drawing, I show a golf cart 10 of a conventional type which includes a frame, indicated generally at 11, in which a golf bag 13 is adapted to be positioned to permit said golf bag and clubs 14 contained therein to be readily moved by a player from place to place on the golf course.

The frame 11 of the golf cart includes an elongated, substantially vertical tubular member 16 intermediate the ends of which is secured a collar 17 which provides brackets 18, only one of which is shown, adapted to permit the pivotal and retractible mounting of wheels 20 by means of a linkage 19. Pivotally secured to the upper end of the tubular member 16 and adapted to be adjusted in reference thereto is a handle 22 which is grasped by the player when he desires to pull the cart 10 around the course upon the wheels 20. Fastened to the upper end of the tubular member 16 adjacent the end of the handle 22 is a spring clip 23, welded or otherwise affixed to the tubular member 16, which positions the upper end of the golf bag 13 upon the golf cart 10 while a strap 25 secures the upper end of said bag to the tubular member 16. A clip and strap combination 26 secures the lower end of the golf bag 13 to the lower end of the tubular member 16 of the golf cart 10.

Fastened to the frame 11 of the golf cart 10 intermediate the upper and lower ends of the tubular member 16 is a demountable seat 30 which includes mounting means 32 adapted to securely position supporting means 33 attached to a seat member 34 which has rigidly fixed to the under side thereof a ground-contacting standard 35 designed to space the seat member 34 a predetermined distance above the ground when the weight of the user thereof is imposed thereupon. The ground-contacting standard 35 is provided with a base 36 adapted to prevent the penetration of the standard 35 through the turf or ground upon which the standard is imposed.

The mounting means 32 includes an elongated strap member 38 which is disposed transversely of the vertical axis of the tubular member 16 of the frame 11 and is securely fastened thereto by means of a clamping member 39 which secures the mounting means to the periphery of the tubular member 16 intermediate the upper and lower ends thereof. The elongated strap 38 is provided with a centrally located opening 41, which is adapted to permit the strap 38 to be secured to the clamping member 39, and locating holes 42 disposed on opposite sides of the opening 41.

The clamping member 39 includes a substantially U-shaped strap 44 having feet 45 with holes 46 formed therein adapted to permit the reception of the shanks of bolts 47 which secure the strap 44 in operative relationship with a substantially T-shaped block 48 the end of whose leg is provided with an arcuate recess 49 adapted to conform to a portion of the circumference of the tubular member 16 of the frame 11 of the golf cart 10 and to define in conjunction with the arcuate inner surface 50 of the strap 44 a circumference conforming to the peripheral circumference of the tubular member 16. The U-shaped strap 44 and its mating block 48 are locked upon the tubular member 16 by means of nuts 51 threaded upon the projecting ends of the bolts 47.

Projecting from the face of the block 48 is a centrally located stud 52 which is adapted to be inserted in the opening 41 of the elongated strap 38 and which is adapted to have threaded thereupon a thumb nut 53 or similar fastener to secure the strap 38 to the clamping member 39. It should be noted that the ends of the bolts 47 are adapted to enter the locating holes 42 in the strap 38 to prevent the dislocation of the strap 38 from its transverse position in reference to the vertical axis of the tubular member 16. However, when the demountable seat is removed from the tubular member 16 the strap 38 may be swung 90° as shown at 38' in Fig. 2 of the drawing to facilitate the transportation of the golf cart.

The opposite ends of the strap 38 of the mounting means 32 are twisted as indicated at 55 for a purpose which will be described in greater detail below. Formed in the ends 55 of the strap 38 are open ended slots 56 which are adapted to receive the inner end of the supporting means 33. The supporting means 33 includes elongated, resilient rods 58 the inner ends 59 of which are threaded and provided with cooperating positioning nuts 60 and thumb nuts 61. Thus, by inserting the ends 59 of the supporting rods 58 in the slots 56 and adjusting the positioning nuts 60 against the surfaces of the ends of the strap 38 and tightening up the thumb nuts 61 the ends 59 of the supporting rods may be securely fastened to the ends 55 of the transverse strap 38.

Secured to the under side of the seat member 34, as by means of screws 63, are spaced brackets 64 which have openings 65 adapted to receive the outer ends 66 of the supporting rods 58. As best shown in Fig. 4 of the drawing, the outer ends of the supporting rods 58 are provided with right-angle bends and are threaded to receive thumb screws 67 which are adapted to secure the ends 66 of the rods 58 in the openings 65 of the brackets 64. Thus it can be seen that the seat member 34 is supported in a transverse position upon the outer ends of the supporting rods 58 and is adapted to have the said rods pivot into a variety of operating positions in the brackets 64. However, in order to firmly position the seat member 34 upon the outer ends 66 of the supporting rods 58 when the demountable seat structure is attached to the golf cart 10, the brackets 64 are provided with positioning means in the form of arcuate depressions 70 which are adapted to receive the ends of the supporting rods 58 and to hold the seat member 34 in a predetermined position in respect to said ends when the thumb nuts 67 are tightened upon the threaded ends 66 of the supporting rods 58. In this manner, the inadvertent pivoting of the seat member 34 upon the outer ends of the supporting rods 58 is prevented when the weight of the user thereof is imposed thereupon.

The significance of the twisted ends 55 of the transverse strap 38 can now be best appreciated by consulting Figs. 1 and 3 of the drawing which show that the ends 55 of the transverse strap 38 cause the supporting means 33, as embodied in the elongated, resilient supporting rods 58, to be upwardly directed at an angle divergent from that in which they would be positioned if the ends 55 of the transverse strap 38 were not so off-set. In this manner, the base 36 of the ground-contacting standard 35 is maintained a predetermined distance above the surface of the ground when the seating apparatus is not in use. Thus, when the seat is not in use the base 36 of the ground-contacting standard 35 will not drag along

the ground as the golf cart 10 is moved from place to place by the user thereof. When, as best shown by the dotted lines 35' of Fig. 1 of the drawing, the weight of the user of the seat is imposed upon the seating member 34 thereof, the supporting rods 58 are deflected downwardly to cause the base 36 of the ground-contacting standard 35 to contact the surface of the ground. When the individual sitting on the seat member 34 lifts himself therefrom the seat member 34 will be lifted upwardly by the action of the resilient, supporting rods 58 to lift the base 36 of the standard 35 out of contact with the ground.

When it is desired to remove the demountable seat 30 from its operative relationship with the golf cart 10 the clamping member 39 may be released from the vertical member 16 of the frame 11 of the cart 10 by unthreading the bolts 47 from the nuts 51 and separating the U-shaped portion 44 of the clamping member 39 from the T-shaped portion 48 thereof, thus permitting the transverse strap 38 to be released from the cart 10. However, the clamping member 39 may be left as a permanent installation upon the tubular member 16 and the unthreading of the thumb nut 53 from the stud 52 will be sufficient to permit the transverse strap 38 to be disengaged therefrom. When the disengagement of the transverse strap 38 from the clamping member 39 has been accomplished the thumb nuts 67 which secure the outer ends 66 of the supporting rods 58 in the positioning depressions 70 of the brackets 64 may be released to permit the supporting rods 58 to be pivoted into a position where they are substantially parallel with the ground-contacting standard 35. When the demountable seat 30 has been folded up in this manner it may be readily transported from place to place.

In addition to being capable of being utilized in conjunction with a golf cart or similar wheeled vehicle the demountable seat 30 can be utilized as a field seat at various athletic performances. When the seat 30 is so used, the supporting rods 58 may be removed or may be swung down into the position indicated in Fig. 5 where the ends 59 of the supporting rods are brought into contact with the surface of the ground. When the weight of the user of the seat is imposed upon the seat member 34 the ends 59 of the rods 58 will be forced into the ground. If the transverse strap member 38 is used upon the supporting rods 58 as indicated, it and the positioning nuts and stop nuts 60 and 61 will prevent the ends of the rods 58 from penetrating so deeply into the ground as to place the seat member 34 at too sharp an angle to permit the user thereof to sit comfortably thereupon.

As best shown in Fig. 6, a mounting means 71, in which like parts are designated by identical reference numerals previously utilized in discussing the mounting means 32, is adapted to be utilized in conjunction with a golf cart having two tubular frame members 16 instead of one is best shown in Fig. 6 of the drawing. The tubular frame members 16 may be connected to each other by means of transverse stiffeners, not shown, fastened between the upper and lower ends thereof or by any other conventional means. The mounting means 71 includes a transverse strap member 38 adapted to mount elongated, resilient supporting rods 58 and has two clamping members 39 adapted to permit the transverse strap 38 to be rigidly mounted upon each of the tubular members 16. Other modifications can be made in the mounting means of the demountable seat

which will permit it to be universally mounted upon a wide variety of types of golf carts.

Although I have shown and described a preferred embodiment of my invention for the purpose of illustrating the manner of construction and mode of operation of said invention, it is obvious that changes, modifications and alterations may be made in the specific elements and details thereof and I, therefore, do not wish to be limited to such specific details and elements but prefer rather to be afforded the full scope of the following claims.

I claim as my invention:

1. In a demountable seat adapted to be supported upon and carried by a wheeled vehicle, the combination of: a substantially vertical, ground-contacting standard; a seat member secured upon the upper end of said standard; mounting means adapted to be connected to said vehicle; and elongated supporting means having one end connected to said seat member, said elongated supporting means including spaced rods having said seat member pivotally mounted on their outer ends and their inner ends rigidly connected to said mounting means.

2. In a demountable seat adapted to be supported upon and carried by a wheeled vehicle, the combination of: a substantially vertical, ground-contacting standard; a seat member secured upon the upper end of said standard; elongated supporting means having one end connected to said seat member, said elongated supporting means being resilient and normally adapted to support said seat upon said wheeled vehicle with said ground-contacting standard clearing the surface of the ground.

3. A combination as defined in claim 2 in which said resilient, elongated supporting means have said seat pivotally mounted on the outer ends thereof.

4. A combination as defined in claim 3 in which said seat is provided with positioning means adapted to prevent the pivoting of said seat upon the outer ends of said supporting means when said seat is secured to said wheeled vehicle.

5. In a wheeled vehicle, the combination of: a main frame; mounting means attached to said frame; elongated, resilient supporting means attached to said mounting means; a seat member secured to the end of said supporting means; and ground-contacting means secured to the under side of said seat member adapted to contact the surface of the ground when a load is imposed upon the surface of said seat member to downwardly deflect said elongated, resilient supporting means.

6. A combination as defined in claim 5 in which said seat member is pivotally secured to the outer end of said supporting means.

7. A combination as defined in claim 6 in which said seat member is provided with positioning means adapted to secure said seat member in a predetermined position of adjustment upon the outer end of said supporting means.

8. In a wheeled vehicle, the combination of: a main frame; mounting means secured to said frame intermediate the ends thereof; said mounting means including clamping means encompassing said frame; elongated, resilient supporting means attached to opposite ends of said mounting means; a seat member secured to the ends of said supporting means and extending transversely of the axis of said frame; and

ground-contacting means secured to the under side of said seat member.

9. A combination as defined in claim 8 in which said seat member is pivotally secured to the ends of said supporting means to permit said supporting means, when detached from the vehicle, to be disposed in one of a plurality of seat-supporting positions and to permit said supporting means to be folded into parallelism with said ground-contacting means to facilitate transportation of said seat member.

10. A combination as defined in claim 9 in which said seat member is provided with seat-positioning means adapted to restrict the pivotal movement of said seat member when said seat member is mounted upon said vehicle.

LLOYD F. LYONS.

REFERENCES CITED

The following references are of record in the file of this patent:

UNITED STATES PATENTS

Number	Name	Date
347,927	Esser	Aug. 24, 1886
394,325	Barber	Dec. 11, 1888
884,280	Liden	Apr. 7, 1908
2,438,078	Sutphen	Mar. 16, 1948

FOREIGN PATENTS

Number	Country	Date
250,760	Great Britain	Apr. 22, 1926