March 19, 1963 L. BONO 3,081,724

ZIG-ZAG SEWING MACHINE

Filed March 8, 1960 7 Sheets-Sheet 1

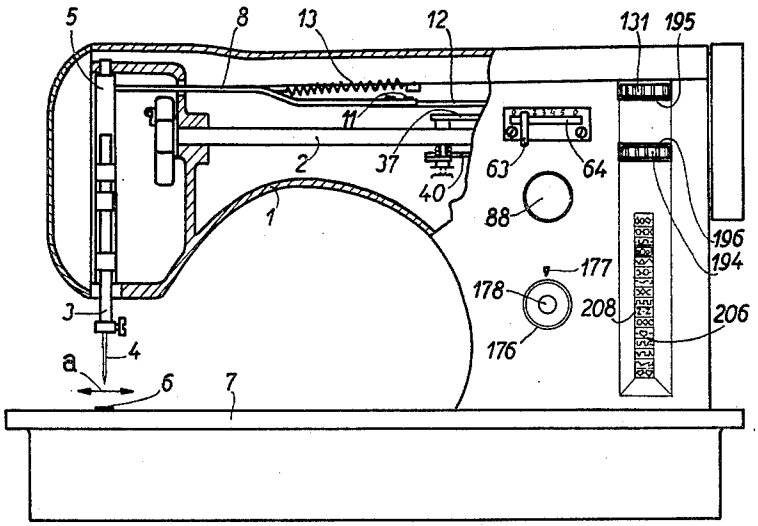

FIG.1

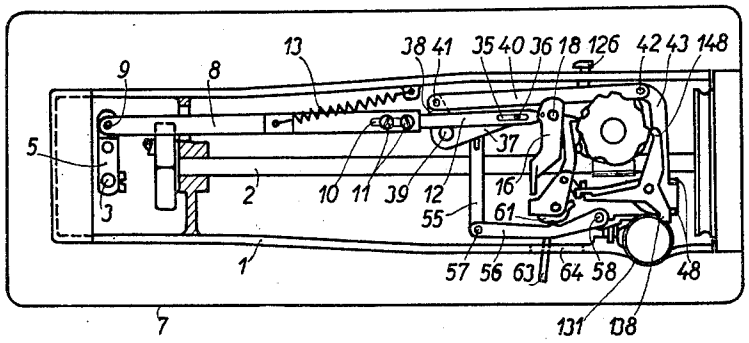

FIG.2

Inventor
Luigi Bono
By
Wenderoth, Lind & Ponack
Attorneys

ZIG-ZAG SEWING MACHINE

Filed March 8, 1960 7 Sheets-Sheet 2

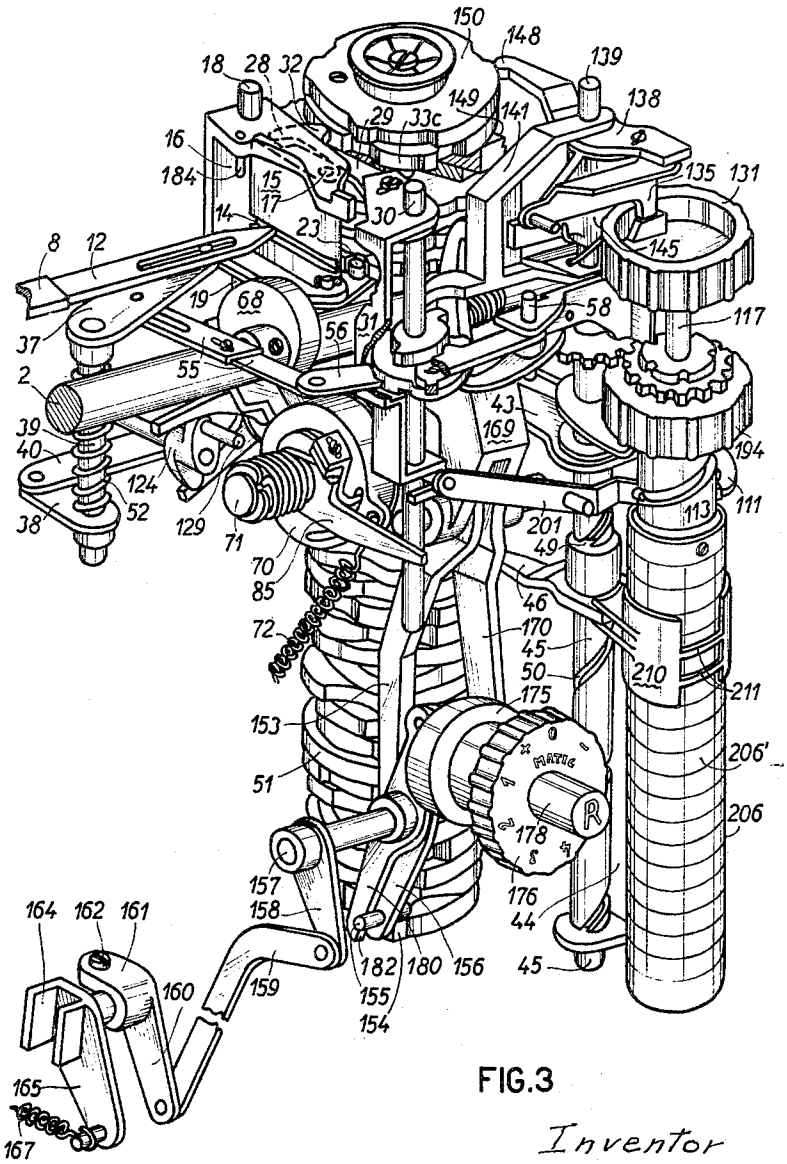

FIG.3

Inventor
Luigi Bono
By
Wenderoth, Lind & Ponack
Attorneys

March 19, 1963 L. BONO 3,081,724

ZIG-ZAG SEWING MACHINE

Filed March 8, 1960 7 Sheets-Sheet 3

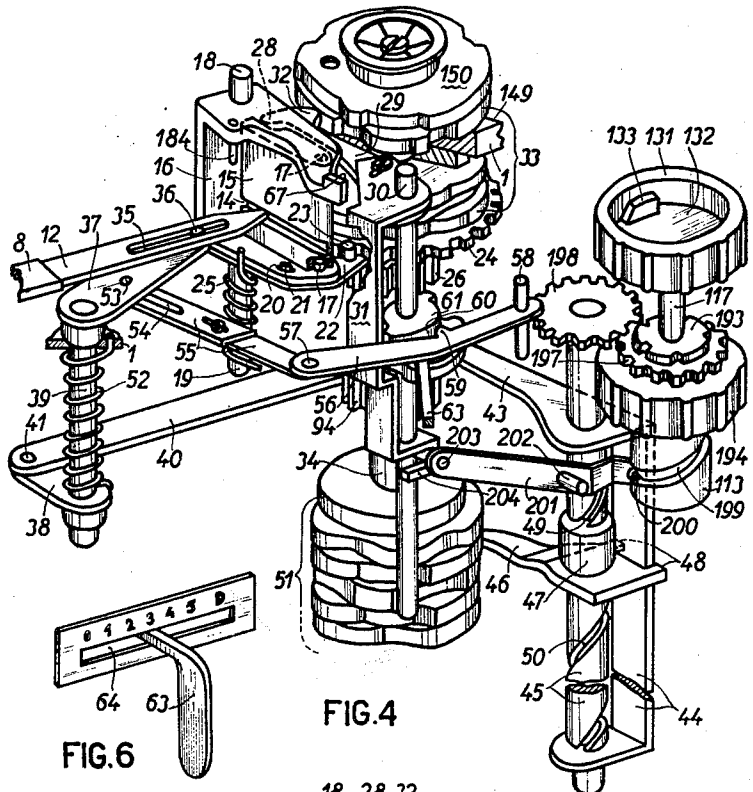

FIG.4

FIG.6

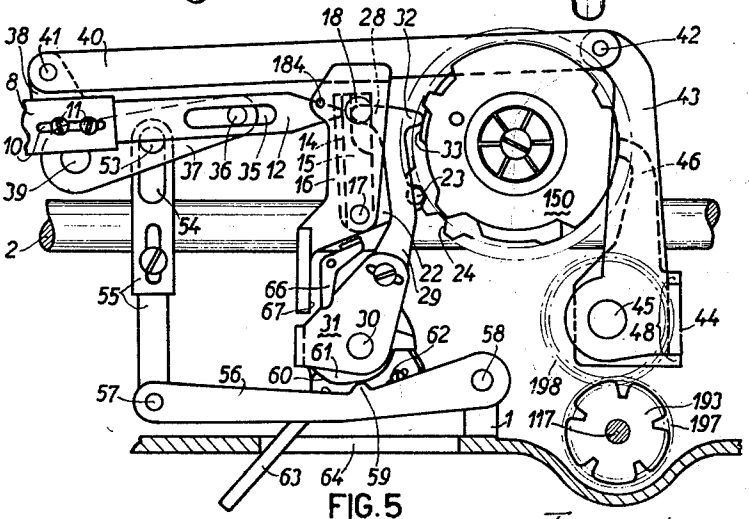

FIG.5

Inventor
Luigi Bono
By Wenderoth, Lind & Ponack
Attorneys

ZIG-ZAG SEWING MACHINE

Filed March 8, 1960 7 Sheets-Sheet 4

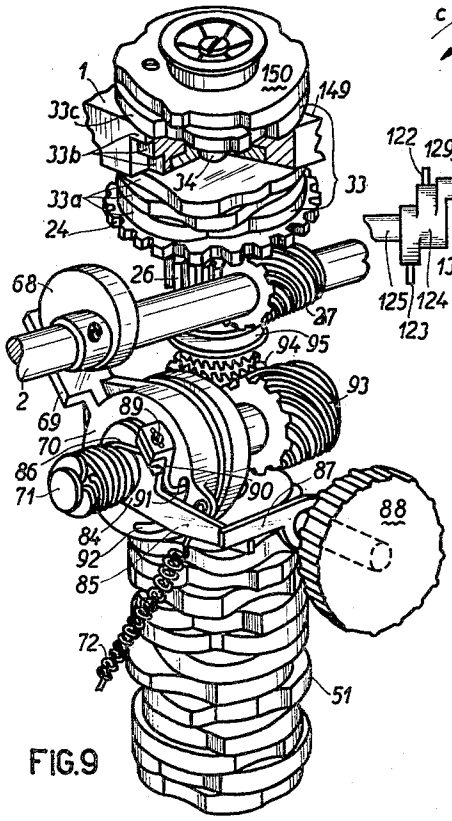

FIG.9

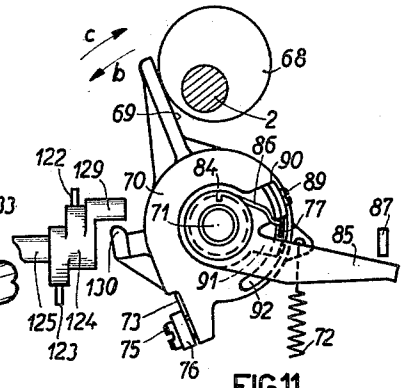

FIG.11

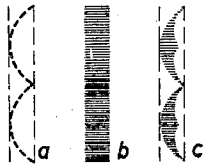

FIG.7

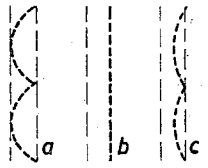

FIG. 8

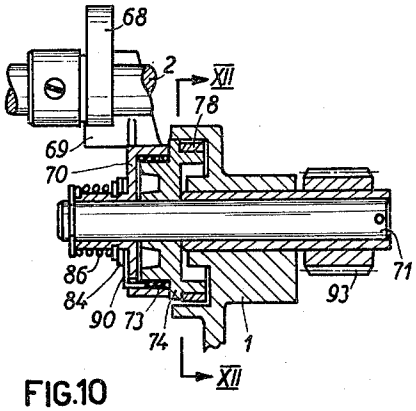

FIG.10

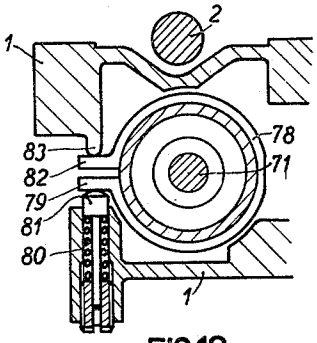

FIG.12

Inventor
Luigi Bono
By
Wenderoth, Lind & Ponack
Attorneys

ZIG-ZAG SEWING MACHINE

Filed March 8, 1960 7 Sheets-Sheet 5

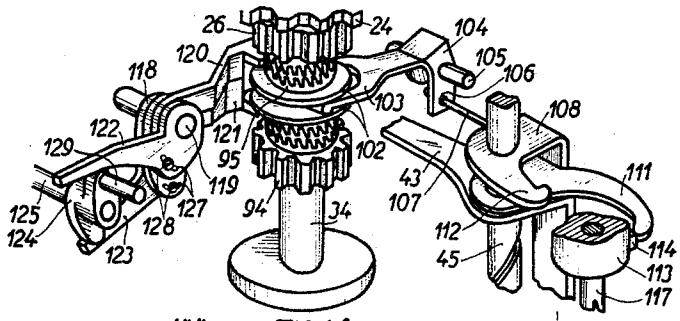

FIG.14

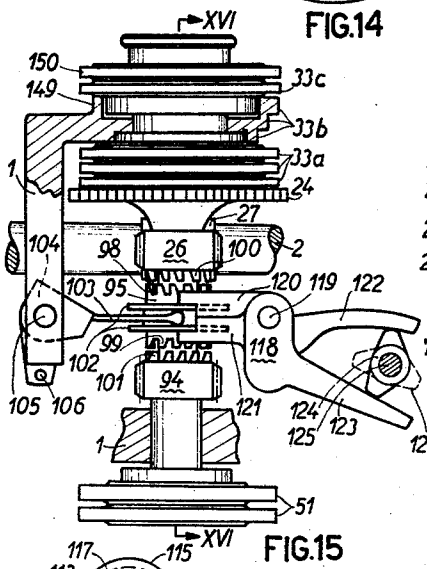

FIG.15

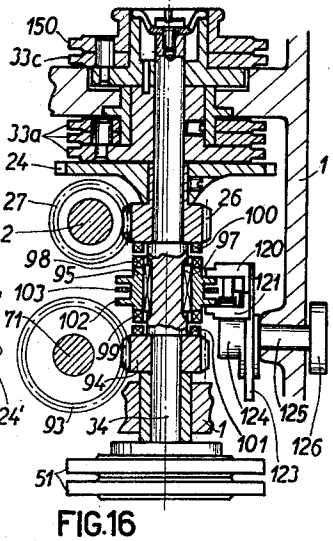

FIG.16

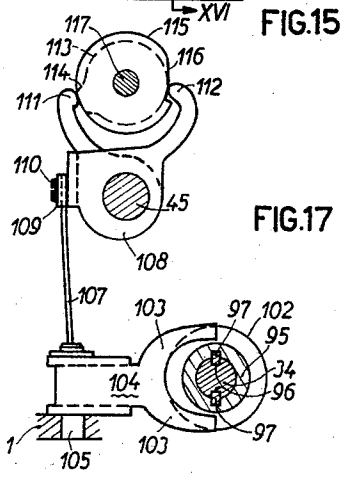

FIG.17

FIG.13

Inventor
Luigi Bono
By
Wenderoth, Lind & Ponack
Attorneys

ZIG-ZAG SEWING MACHINE

Filed March 8, 1960 7 Sheets-Sheet 6

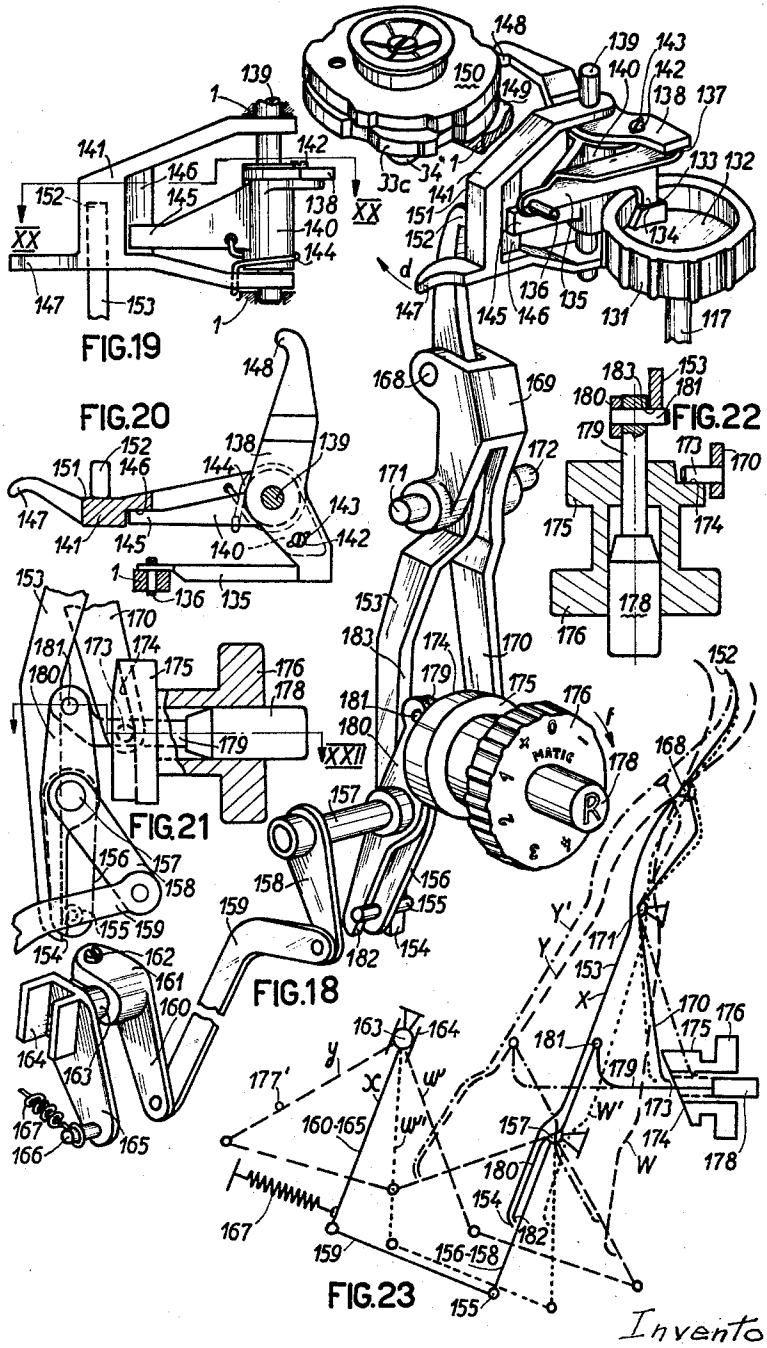

Inventor
Luigi Bono
By
Wenderoth, Lind & Ponack
Attorneys

ZIG-ZAG SEWING MACHINE

Filed March 8, 1960 7 Sheets-Sheet 7

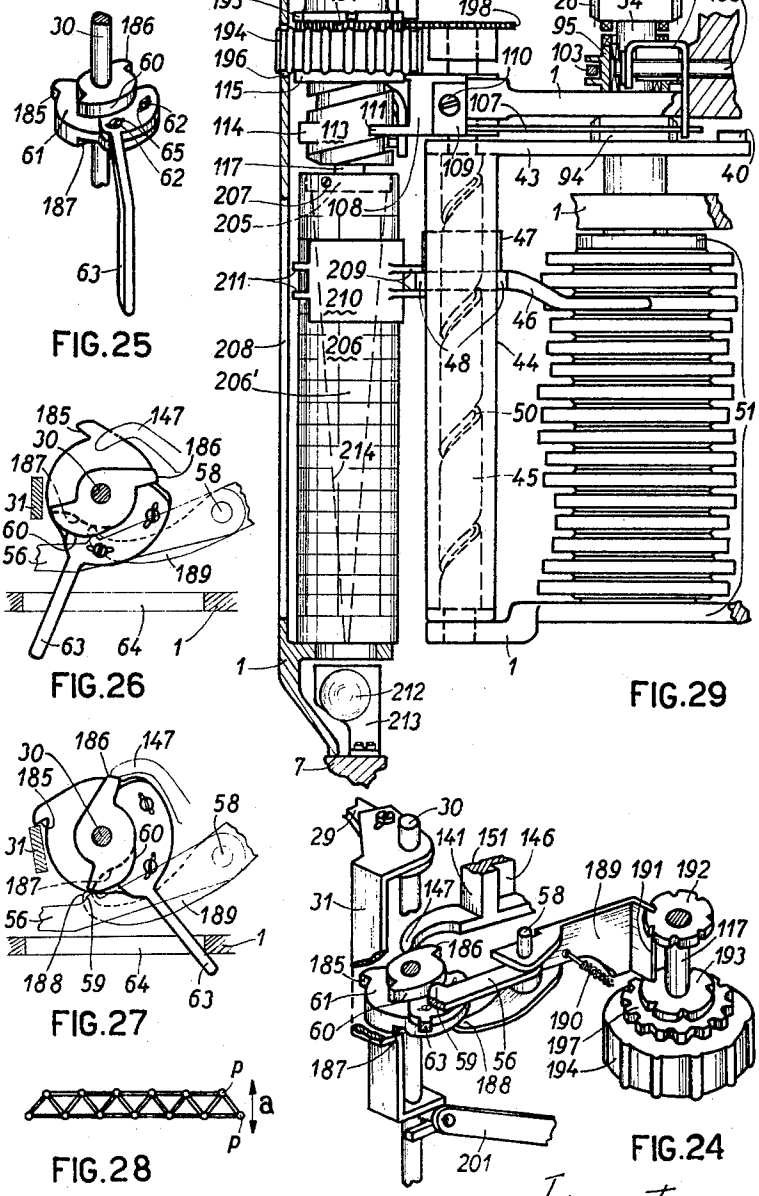

Inventor
Luigi Bono
By
Wenderoth, Lind & Ponack
Attorneys

United States Patent Office

3,081,724

Patented Mar. 19, 1963

1

3,081,724
ZIG-ZAG SEWING MACHINE

Luigi Bono, Pavia, Italy, assignor to Necchi Societa per Azioni, Pavia, Italy, a company of Italy

Filed Mar. 8, 1960, Ser. No. 13,587
Claims priority, application Italy Dec. 31, 1959
13 Claims. (Cl. 112—158)

This invention relates to a sewing machine wherein cooperating means are provided for securing the desired transverse oscillations of the needle bar together with desired modifications in the feed of the material.

It is an object of the present invention to provide a sewing machine comprising improvements in the devices to control in an adjustable manner the transverse displacements of the needle bar and/or the stroke of the cloth-feeder.

With the above and other objects in view which will become apparent from the following detailed description, a preferred form of the invention is shown in the drawings in which:

FIGURE 1 is a front elevational view of a sewing machine with portions shown in section.

FIGURE 2 is a plan view of the machine shown in FIGURE 1 with parts broken away and shown in section.

FIGURE 3 is a perspective view of the various operating mechanisms.

FIGURE 4 is a perspective view showing particularly the means for controlling the various displacements of the needle bar.

FIGURE 5 is a plan view of the mechanism shown in FIGURE 4.

FIGURE 6 is a perspective view of the lever for operating the feelers cooperating with the respective cams.

FIGURE 7 is a diagrammatic view showing one type of sewing pattern.

FIGURE 8 is a similar view illustrating another type of sewing pattern.

FIGURE 9 is a perspective view of the device for transmitting to the cam carrying shaft the rotary movement with unidirectional releases.

FIGURE 10 is a view with parts in cross-section of a detail of FIGURE 9.

FIGURE 11 is a partial plan view of FIGURE 9.

FIGURE 12 is a cross-sectional view taken upon section line XII—XII of FIGURE 10.

FIGURE 13 is a diagrammatic view showing another type of sewing pattern.

FIGURE 14 is a perspective view showing the means for controlling the cam-carrying shaft with a continuous or stepwise rotary movement.

FIGURE 15 is a side elevational view with additional details of the means shown in FIGURE 14.

FIGURE 16 is a cross-sectional view taken upon section line XVI—XVI of FIGURE 15.

FIGURE 17 is a plan view of a portion of the device shown in FIGURE 14.

FIGURE 18 is a perspective view of the means for adjusting the stroke of the cloth feeder either manually or by means of a cam.

FIGURE 19 is an elevational view of a detail of FIGURE 18.

FIGURE 20 is a cross-sectional view taken upon section line XX—XX of FIGURE 19.

FIGURE 21 is a cross-sectional view of a detail of FIGURE 18.

FIGURE 22 is a cross-sectional view taken upon section line XXII—XXII of FIGURE 21.

FIGURE 23 is a diagrammatic view illustrating the movements of the portions shown in FIGURE 18.

FIGURE 24 is a perspective view illustrating the means for detaching the feelers from the respective cams.

2

FIGURE 25 is a perspective view showing a detail of FIGURE 24.

FIGURE 26 is a plan view of a detail of FIGURE 24.

FIGURE 27 is a view similar to FIGURE 26 showing the parts in a different position.

FIGURE 28 illustrates diagrammatically another type of sewing pattern, and

FIGURE 29 is an elevational view with parts in cross-section showing the means for selecting the particular pattern desired.

The sewing machine illustrated by way of example in the figures comprises a frame **1** within which there rotates the upper shaft **2** which, through mechanisms known per se and not visible, transmits to the needle bar **3** reciprocating movements in a substantially vertical plane.

The needle bar **3**, to which the needle **4** is applied, is located within the support **5**. The support **5** in turn is pivoted to the frame **1** in such a way that the needle-bar can undergo displacements in the direction indicated in FIG. 1 by the arrow "*a*," transversely with respect to the direction of feed of the cloth as effected by the feeder **6** acting in the base **7** of said frame **1**.

Transverse Displacements of the Needle-Bar

The displacements of the needle-bar **3** transverse with respect to the feeding direction of the cloth are controlled by the rod **8** having one end connected to the support **5** by the pin **9**.

The other end of rod **8** has a slot **10** wherein there engage the screws **11** which fix the bar **12**. The slot **10** permits the adjustment of the overall length of the rod **8** and of the bar **12**.

The spring **13**, anchored to the rod **8** and to the frame **1**, presses the bar **12** within the groove **14** of the lever **15** (FIGS. 4 and 5) which is fulcrumed between the two arms of the forked lever **16** by the pins **17**.

The forked lever **16** in turn is fulcrumed on the frame **1** by the pins **18** and **19**. In a slot **20** of lever **16** engages the screw **21** which fixes the plate **22** to the lever **16**. The slot **20** permits adjusting the mutual angular position of the lever **16** and of the plate **22** around the common fulcrum represented by the pin **19**.

The plate **22** carries a dowel **23** which presses upon the cam **24**, having a plurality of teeth, by the effect of the spring **25** wound on the pin **19** and has its two ends anchored respectively to said plate **22** and to the frame **1**.

The cam **24** is fixed to the gear **26** in engagement with the gear **27** (FIG. 16) fixed on the shaft **2**, as more fully described below.

Against the side of the lever **15** opposite the groove **14** there presses, in correspondence with the axis of the pins **18** and **19**, the feeler **28** (FIGS. 4 and 5). The feeler **28** forms part of a lever **29** which is pivoted freely on the shaft **30** and is fixed in adjustable angular position to the upright **31**, which in turn is pivoted freely on the shaft **30**.

The shaft **30** is mounted in the frame **1** of the machine.

By means described below the lever **29** may move with translatory movement rigidly with the upright **31** along the axis of the shaft **30** to bring its own feeler **32** into contact with any cam of the pile of cams **33** coaxial with the cam **24** and fixed to the shaft **34** mounted in the frame **1**.

The means for controlling the rotations of the cam **33** are described below.

In the exemplary machine illustrated, the pile of cams **33** is constituted (FIGS. 15 and 16) by some cams **33*a*** having profiles varied in any manner, fixed to the shaft **34**, by other cams **33*b*** presenting profiles with constant radii and constituted actually by fixed steps provided in the frame **1**, and finally by an interchangeable cam **33*c***.

It is evident that the lever **15** oscillates about its own pins **17** according to the movement of the feeler **32** op-

erated by the cams 33 and at the same time it oscillates about the pins 18 and 19 of the forked lever 16 according to the movement of the dowel 32 imparted by the cam 24.

These oscillations are transmitted to the needle-bar 3 through the bar 12 and the rod 8 depending on the position of the bar 12 in the groove 14 of the lever 15.

The means for controlling automatically the position of the bar 12 in said groove 14 are obtained in the following way (FIGS. 4 and 5): the bar 12 has a slot 35 within which is free to slide the pin 36 fixed on a lever 37. The lever 37 in turn is fixed, together with the lever 38, to a shaft 39 mounted in the frame 1.

The lever 38 is connected to one end of the link 40 by means of the pin 41.

The pin 42 connects the other end of said link 40 to a further lever 43 which extends from the upright 44 freely pivoted on the shaft 45. The shaft 45 in turn is mounted in the frame 1 of the sewing machine.

The lever 43 oscillates with the feeler 46 which is pivoted with its own bush 47 on the shaft 45 and carries a fork 48 which embraces the upright 44. The bush 47 carries in its interior a helical tooth 49 which cooperates with the helix 50 provided on the shaft 45, which permits in cooperation with means described below bringing the feeler 46 into contact with any cam of the pile of cams 51 fixed to the shaft 34.

The contact between the feeler 46 and any one of the cams 51 is enacted by the spring 52 which is wound on shaft 39 and has its two ends anchored respectively to the lever 38 and to the frame 1. The pile of cams 51 hence controls the automatic sliding of the bar 12 within the groove 14 of the lever 15, through the kinematic chain represented by the upright 44 with the lever 43, the link 40 and the levers 38 and 37.

The position of the bar 12 within the groove 14 of the lever 15 however may be controlled even by hand actuation in the following way (FIGS. 4 and 5):

To the lever 37 there is fixed a small pin 53 engaged in the slot 54 of a link of adjustable length 55 which in turn is pivoted to one end of the lever 56 by the pin 57. The other end of said lever 56 is fulcrumed to the frame 1 by the pin 58.

The lever 56 carries a projection 59 in contact with a profile 60 provided on the cam 61 (FIG. 25) fixed to the 30. The screws 62 fix to the cam 61 the handle 63 projecting from the slot 64 provided in the frame 1. The eyelets 65 of the handle 63, in which the screws 62 engage, permit adjusting the mutual angular position between the handle 63 and the cam 61.

When the handle 63 is displaced by hand from the left towards the right within the slot 64, the profile 60 contacts the projection 59 with a gradually increasing radius and, therefore, through the kinematic chain represented by the lever 56, the link 55 and the lever 37, causes the sliding of the bar 12 towards the axis of the pins 17 of the lever 15.

At the same time through the kinematic chain represented by the levers 37 and 38, the link 40 and the lever 43 with the upright 44, there is determined the contact between the feeler 46 and the cams of the pile of cams 51.

When the handle 63 finds itself in correspondence with the numeral "5" (FIG. 6) marked on the graduations of the slot 64, the bar 12 places itself accurately on the axis of the pins 17 and the feeler 46 contacts the profile of maximum radius of the cams of the pile of cams 51.

If the handle 63 is brought again towards the left, the bar 12 shifts again towards the axis of the pins 18 and 19, by the action of the spring 52.

If the handle 63 is brought to correspond with the letter "D" (FIG. 6) marked on the graduations of the slot 64, the detachment of all of the feelers of the machine is operated as fully explained below.

To the frame 1 there is pivoted a small lever 66 (FIG. 5) which may be shifted by hand to two positions. In one of said positions, said small lever is inoperative; in

its other position it presses against the surface 67 of the forked lever 16 and compels said lever 16 to rotate around the pivots 18 and 19 in such a way as to move slightly the dowel 23 of the plate 22 from the profile of the cam 24. In this condition the lever 15 oscillates only around its own pivots 17, by the action of the cams 33.

Operation of the members described so far is as follows: The forked lever 16 oscillates around the pivots 18 and 19 thanks to the contact between the dowel 23 and the cam 24, which rotates with respect to the main shaft 2 with the ratio of the gears 26 and 27.

Through the pins 17 said forked lever 16 transmits oscillations to one end of the lever 15, the other end of which oscillates at the axis of the pins 18 and 19 by action of a cam of the cam of piles 33, acting through the feelers 32 and 28 of the lever 29.

The bar 12 in turn can slide within the grooves 14 of the lever 15 by the action of one of the cams of the pile of cams 51 or by operation of the handle 63 or by combined action of said cam and of said handle.

The bar 12 is connected to the support 5 of the needle bar 3 by the rod 8 and controls the displacements of said needle bar in the direction of the arrow "*a*" (FIG. 1), transverse to the direction of the cloth feed controlled by the feeder 6. If the feeler 32 acts upon a generic cam 33, the needle bar 3 undergoes transverse displacements due only to the profile of said cam if the bar is displaced, within the slot 14 of the lever 15, at the axis of the pins 18 and 19 (FIG. 7*a*). Analogously, said needle bar undergoes only the maximum zigzag oscillations controlled by the cam 24 if the bar 12 is shifted at the axis of the pins 17 (FIG. 7*b*).

Finally said needle bar undergoes oscillations intermediate between that controlled by the generic cam 33 and that controlled by the cam 24 when the bar 12 is in intermediate position between the pins 18 and 19 and the pins 17 (FIG. 7*c*).

In all cases, the sliding of the bar 12 towards the axis of the pins 17, contrary to the action of the spring 52, may be controlled either automatically by the feeler 46 acting upon the pile of cams 51, or by hand by the handle 63 movable within the slot 64 of the frame 1, or by simultaneous action of said feeler 46 and of said handle 63.

What has been set forth hereinbefore is valid in the case in which the small lever 66 pivoted on the frame 1 and visible in FIG. 5, is placed in the position illustrated in said figure, out of contact with the wall 67 of the forked lever 16.

In the particular case that said small lever 66 is instead oriented in such a manner as to press against the surface 67 of the forked lever 16 and as to displace, therefore, the dowel 23 in such a manner that said dowel skims without touching the profile of the cam 24, the following results are obtained:

With the bar 12 at the axis of the pins 18 and 19 one obtains the same sewing designs which were obtained when the dowel 23 was pressing the cam 24 (FIG. 8*a*). With the bar 12 acting at the axis of the pins 17 one obtains a straight-lined sewing (FIG. 8*b*). With the bar 12 acting in intermediate position along the groove 14 of the lever 15 one obtains the same sewing designs as controlled by the only generic cam 33, but with reduced amplitude and shifted towards the right (FIG. 8*c*.) In particular, if the cam 33 is a cam 33*b* of constant radius smaller than the maximum radius, to every intermediate position of the bar 12 along the groove 14 there corresponds a straight sewing line more or less displaced from the left towards the right side (FIGS. 5 and 2).

From the preceding examples it appears clearly that the cams 51 or the handle 63 which during the normal operation of the machine have the function of controlling and adjusting the amplitude of the zigzag, during the operation of the machine with the small lever 66 pressing against the surface 67, have the function of reducing the transverse amplitude of the sewing designs controlled by

the cams 33 or of varying the transverse position of the sewing line.

Rotation of the Cams

On the shaft 2 of the sewing machine illustrated by way of example there is fitted an eccentric 68 in contact with the shoe 69 of a drum 70 (FIG. 9).

Said drum 70 is coaxial with a shaft 71 mounted in the frame 1 (FIG. 10). The spring 72, fixed at one side to the drum 70 and at the other side to the frame 1, ensures the above contact obliging the drum 70 to oscillate reciprocating in the direction of the arrow *b* and in the direction of the arrow *c* (FIG. 11) at every revolution of the upper shaft 2.

At the interior of the drum 70 there is wound the spring 73 which embraces the cylindrical element 74 fixed to the shaft 71. One end of said spring 73 is fixed to the drum 70 by the screw 75 cooperating with the plate 76, while the other end indicated in FIG. 11 with the numeral 77, is free.

The direction in which the spring 73 is wound is such that it grips the cylindrical member 74 and drags it along in rotation when the drum 70 oscillates in the direction of the arrow "*b*." When instead the drum 70 oscillates in the direction of the arrow "*c*," the spring 73 widens and slides on the cylindrical member 74, which, therefore, remains at a standstill in the position assumed previously, thanks also to the action of a brake which is constituted essentially by the spring 78. Said spring 78 (FIG. 12) embraces the cylindrical member 74 and carries a first tongue 79 against which presses, by the effect of the spring 80, the small pin 81 mounted in the frame 1, and a second tongue 82 resting on the stop 83 provided on the frame 1.

When the drum 70 drags along the cylindrical member 74 in the direction of the arrow "*b*" the spring 78 presses against the small pin 81, overcomes the resistance of the spring 80 and expands, permitting the dragging. When instead the drum 70 starts oscillating in the direction of the arrow "*c*" the spring 80 clamps the cylindrical member 74 and cooperates with the expanding of the spring 73 to prevent dragging of said member.

Hence the shaft 71 turns with unidirectional steps in the direction of the arrow "*b*." The eccentric 68 is fitted on the upper shaft 2 in such angular position that said steps are covered when the needle 4 is safely at top, out of the cloth. To vary the ratio of transmission between the upper shaft 2 and the shaft 71 it is obviously necessary to vary the amplitude of the steps of said shaft 71.

This is obtained thanks to a ring 84 coaxial with the drum 70, free with respect thereto and carrying an arm 85 that presses, by the action of the spring 86, against the arm 87 fixed to the control button 88. Said button 88—thanks to stopping and friction means known per se and not visible in the figures can be rotated in any position comprised between two extreme positions.

The screw 89 fixes to the ring 84 a second ring 90 in convenient mutual angular position. Said second ring 90 engages its own extension 91 in the slot 92 provided in the drum 70. According to the position in which the button 88 is rotated, the extension 91 interferes more or less with the free end 77 of the spring 73. If at the beginning of the rotation of the drum 70 in the direction of the arrow "*b*" the extension 91 does not interfere with said free end 77, the spring 73 immediately clamps the cylindrical member 74 and, therefore, said member rotates, fixed to the shaft 71, practically through the same angle as said drum 70. If instead the button 88 is rotated in such a manner that at the beginning of the rotation of the drum 70 in the direction of the arrow "*b*" the extension 91 presses against the free end 77 of the spring 73, said spring 73 clamps the cylindrical member 74 only after said drum 70 has already rotated through such an angle as to detach said free end 77 from said extension 91.

To every position of the button 88 therefore there corresponds a determined ratio of transmission between the upper shaft 2 and the shaft 71.

On the shaft 71 there is fixed the gear 93 in engagement with the gear 94 loose on the shaft 34.

It has already been said that on the upper shaft 2 there is fitted the gear 27 in engagement with the gear 26 which too is loose on the shaft 34 and fixed with the cam 24.

On the shaft 34, between the gears 26 and 94, there is slidable the bush 95 which engages with the axial grooves 96 the two keys 97 of said shaft and carries the engaging teeth 98 and 99 respectively for engaging the teeth 100 and 101 provided on said gears.

It is apparent that if the bush 95 slides along the axis of the shaft 34 in such a way as to bring about engagement of its own engaging teeth 98 with the engaging teeth 100 provided on the gear 26, the shaft 34 rotates with all cams rigid thereto, rigid with cam 24, with the transmission ratio, in respect to the upper shaft 2, due to the gears 26 and 27.

If instead the bush 95 brings about engagement of the engaging teeth 99 with the engaging teeth 101 provided on the gear 94, the shaft 34 receives movement by unidirectional steps of adjustable amplitude as controlled by the shaft 71 through the gears 93 and 94.

The means for controlling the sliding of the bush 95 along the axis of the shaft 34 are realized in the following manner: between the collars 102 of the bush 95 there is engaged the fork 103 of the rocker 104 fulcrumed on the frame 1 by the pin 105.

In the hole 106 of said rocker there engages the spring wire ("harmonic wire') 107 which is fixed to a forked lever 108 by the plate 109 and by the screw 110 (FIG. 17). The forked lever 108 is fulcrumed on the shaft 45 already mentioned and carries two arms 111 and 112 rigid with each other.

The arm 111 of said lever scans the cylindrical peripheral surface of the drum 113, which is interrupted by a projecting step 114. The arm 112 feels the peripheral surface of a ring 115 which is rigid and coaxial with said drum 113 and which presents a recess 116 opposed to the projecting step 114 of said drum.

As fully described in a subsequent paragraph below, there is provided a button 131 which permits said drum 113 and said ring 115 to rotate rigid with the shaft 117, which is mounted in the frame 1. When following said rotation the two arms 111 and 112 feel respectively the step 114 and the recess 116, the wire ("harmonic wire") 107 rotates the rocker 104 around its own pin 105 in such a way as to displace its own fork 103 upwards, so that the bush 95 slides on the shaft 34 and engages its own engaging teeth 98 with the engaging teeth 100 of the gear 26. If instead the drum 113 and the ring 115 are rotated in such a way that the two arms 111 and 112 of the lever 108 feel respectively the remaining circular parts of their peripheral surfaces, the harmonic wire 107 pushes the rocker 104 to displace its own fork 103 downwards, in such a way that the bush 95 should slide on the shaft 34 and engage its own engaging teeth 99 with the engaging teeth 101 provided on the body of the gear 94.

The elastic means represented by the harmonic wire 107 permits the rotation of the shaft 117 rigid with the drum 113 and with the ring 115 also if the mutual angular position between the engaging teeth 98 and 100 or 99 and 101 is momentarily such as to prevent said engagement.

The elasticity of the harmonic wire 107, or of any other equivalent means replacing it, permits also to stop the bush 95 in an intermediate position between the gears 26 and 94, in such a manner as to stop the rotation of the shaft 34 and of the two piles of cams 33 and 51 rigid therewith and so as to keep only cam 24 in rotation.

To effect said stopping of the bush 95 in intermediate position, to the frame 1 of the machine there is fulcrumed the scissors-like member 118 by the pin 119.

Said scissors-like member is constituted by two small

levers 120 and 121 which embrace the collars 102 of the bush 95 and by two small levers 122 and 123 riding a member 124 fulcrumed by the pin 125 to the frame 1 and rigid with the actuating button 126.

The eyelets 127 which are provided in the small levers 121 and 122 and with which there engage the screws 128 which fix the small levers respectively to the small levers 123 and 120, permit adjusting the mutual position of said small levers.

When the member 124 is oriented in the position illustrated in FIGURES 14 and 15 the member 118 ("scissors") closes on the collars 102 of the bush 95 and locks said bush in the intermediate position between the gears 26 and 94.

When the member 124 is in the position shown with dotted lines 124' as illustrated in FIGURE 15, the "scissor" 118 open on the collars 102 and do not act to determine the position of the bush 95 which so can slide upwards and downwards on the shaft 34 according to the angular position of the shaft 117. When instead the member 124 is in a third position not illustrated in the figures, the scissors 118 do not condition the position of the bush 95 and the pin 129 rigid with the member 124 presses against the extension 130 of the drum 70 (FIG. 11), thereby detaching the shoe 69 of said drum from contact with the eccentric 68 fitted onto the upper shaft 2 and stopping thereby the shaft 71.

The means described in the preceding paragraph permit, therefore, to rotate the shaft 34 by intermittent motion with unidirectional strokes of adjustable amplitude, or to rotate it by continuous motion with a ratio of transmission fixed and equal to that of the rear 24 in respect to the upper shaft 2, or to exclude rotations of said shaft.

In the first case every sewing design that corresponds to one complete revolution of the shaft 34, can be obtained with a number of stitches more or less great according to the position of the button 88, and, therefore, may result more or less elongated, with equal length of one stitch (FIG. 8). The unidirectional friction means that transforms the motion of the upper shaft 2 into an intermittent movement do not warrant however that every complete cycle of the sewing design is made with a rigorously constant number of stitches, but there will always be small irregularities, which however are fully compensated by the above possibility of elongating the designs (patterns).

In the second case every sewing cycle corresponding to one complete revolution of the shaft 34 is performed with a number of stitches always rigorously constant, with the safety that after every sewing cycle the cams will always find themselves in identical positions with respect to the feelers of the machine. In this case the elongation of the sewing designs cannot be obtained but by increasing the length of the stitches, but this limitation is largely compensated by the possibility of obtaining sewing designs for which it is required that the needle should present itself cyclically in position always perfectly identical and predetermined with respect to the fabric, as will be more fully set forth below. (FIG. 28.)

In the third case it will be possible to obtain sewing designs having constant course corresponding to the particular point of the profile of the cams on which the feelers will insist at the time of the stopping of the rotation of the shaft 34.

Stitch-Adjusting Device

On the control button 131 mounted in the frame 1 fixed to the shaft 117 there is a cam 132 constituted by a plane surface having a projection 133 (FIG. 18).

On said cam there rests the projection 134 of a small lever 135 which is fulcrumed on the frame 1 by the pin 136. The other projection 137 of said small lever is in contact with the lower surface of a plate 138 fulcrumed on the pin 139 fixed to the frame 1 coaxially and rigidly with a member 140. The plate 138 can slide along said pin, between the two arms of the forked lever 141, which also is fulcrumed on the pin 139.

The screw 142 which renders the plate 138 rigid with the member 140 is engaged in an eyelet 143 of said plate in such a manner as to permit adjusting the angular mutual position between said plate 138 and said member 140.

On the member 140 there is wound the spring 144 which is anchored at one end to said member and on the other end is fixed to the lower arm of the forked lever 141. Said spring 144 pushes the member 140 downward along the pin 139 and contemporaneously makes the extension 145 of said member adhere against the stop 146 of the forked lever 141.

Means described below under "detachment and translation of the feelers" are adapted to act upon the projection 147 of the forked lever 141 to displace the latter in the direction of the arrow *"d"* (FIG. 18) around the pin 139 in such a manner that the member 140 can rotate by the effect of the spring 144 rigidly with the plate 138 and in such a way that the latter can take its own feeler 148 away from contact with the fixed point 149 of the frame 1, to effect a translatory movement to contact with the cam 150, or vice versa. Said translations are controlled by the rotation of the button 131 through the small lever 135. If the projection 134 of said small lever rests on the projection 133 of the cam 132 the feeler 148 is in contact with the cam 150 while in the contrary case said feeler is in contact with the fixed point 149.

The cam 150 is applied on the shaft 34 above the interchangeable cam 33*c* (FIG. 15) and can if desired form one body with said cam 33*c*.

On the forked lever 141, at the opposed side with respect to the stop 146, there is provided a surface 151 against which presses the projection 152 constituting the upper end of the lever 153 (FIG. 18). The lower end 154 of said lever 153 presses against the pin 155 fixed to the lever arm 156. Said lever arm is fulcrumed on the frame 1 by the pin 157 and also fixed to pin 157 is a second lever arm 158 which in turn, through the rod 159, is connected to the arm 160 of the junction 161. The screw 162 clamps said junction on the pin 163 which is mounted on the frame 1 and is rigid with the slide 164. The slide 164 controls the feed as shown in my Patent No. 3,019,750 granted February 6, 1962.

Said slide 164 has an arm 165 with a small pin 166 to which is anchored one end of the spring 167 whose other end is anchored to the frame 1.

The lever 153 is fulcrumed by the pin 168 to the fork 169 provided at the upper end of the lever 170.

Said lever 170 in turn is fulcrumed on the frame 1 by the pins 171 and 172 and carried at its lower end is a dowel 173 (FIG. 21) which follows the helical profile 174 of the cam 175 and stops said lever in the position prefixed by said cam.

Thanks to the above spring 167, the kinematic chains just described compel the projection 152 of the lever 153 to press against the surface 151 of the forked lever 141. The consequence is that the feeler 148 of the plate 138 is urged either against the fixed point 149 of the frame 1 or the cam 150.

If the feeler 148 contacts the fixed point 149, the lever 153 is subjected only to the rotation caused by the projection 152; controlled by the hand-operation of the button 176.

If the feeler 148 contacts the cam 150, the lever 153 oscillates also around the pin 168 by the effect of said cam.

The rotation by hand of the lever 153 therefore takes place around its projection 152, while its automatic oscillations take place around its pin 168.

If the feeler 148 contacts the cam 150 and the button 176 is rotated in such a way that the numeral "0" marked thereon is in correspondence with the reference index 177 marked on the frame 1, the lever 153 oscillates al-

ternately with respect to the middle position X, towards the extreme positions Y and W indicated in the diagram of FIG. 23.

In going towards the position Y the lever 153 shifts the dowel 155 of the lever arm 156 in such a manner that the slide 164 in getting away from the middle position *x* to which corresponds nil length of stitch, shifts towards the extreme position *y* to which there corresponds a transport of the cloth in forward feed with maximum stitch length.

Analogously, in going towards the position W, the lever 153 displaces the slide 164 towards the position *w* to which corresponds a transport of the fabric in backward feed with maximum stitch length.

The oscillation of the slide 164 by action of the cam 150 can be corrected by rotating the button 176 in one direction or in the other direction in such a way that the cam 175 acting upon the lever 170 displaces in one direction or in the other direction the pin 168 around which the lever 153 oscillates.

To that end on the button 176 there are marked the reference signs + (plus) and — (minus) in symmetrical positions with respect to the numeral "0" (FIG. 18). Said reference signs indicate within which field the button 176 can be turned to obtain small positive or negative variations in length of stitch as automatically controlled by the cam 150.

The button 176 however can be turned in the direction of the arrow "*f*" also beyond the position defined by the reference sign + (plus), towards the positions defined by the numerals from "1" to "4" marked on said button.

In that way are gradually shifted the middle positions of oscillation of said lever 153 and of said slide 164 towards the extreme positions Y′ and Y respectively (FIG. 23) and, therefore, gradually the length of stitch is increased in forward feed as controlled by the cam 150, contemporaneously reducing down to nil the stitch length in backward feed as controlled by the same cam. In order to avoid that in those conditions the oscillations of the lever 153 as controlled by the cam 150 may take the slide 164 beyond the position Y to which corresponds the maximum length of stitch in forward feed as allowed by the machine, on the frame 1 of said machine there is provided a pin 177′ visible in the diagrammatical drawing 23, which constitutes a stop of said slide 164 in position Y.

Thanks to the contact between the pin 155 and the lower end 154 of the lever 153, said pin 177′ does not constitute a hindrance to oscillations of any amplitude that may be desired, of said lever 153.

The rotations of the button 176 in such a way as to take the numerals from "0" to "4" marked on said button, to correspond with the reference index 177 marked on the frame 1, are also necessary to control by hand the length of stitch of sewing.

Said hand control is effected when the feeler 148 of the plate 138 instead of pressing upon the interchangeable cam 150, presses upon the fixed point 149 of the frame 1.

Said hand control is based upon the following considerations: when the numeral "0" marked on the button 176 is in correspondnece with the reference index 177 of the frame 1, and the feeler 148 is in contact with the fixed point 149, the lever 153 is in the middle position X (FIG. 23) in which, pressing with its end 154 upon the pin 155 of the lever arm 156, it determines the middle position *x* of the slide 164. Said middle position as said makes the length of the sewing stitch become nil.

When the button 176 is rotated gradually in the direction of the arrow "*f*" (FIG. 18) in such a way as to take the numerals from "0" to "4" marked on said button, to correspond with the index 177, the lever 170 gradually shifts the pin 168 in such a manner that the lever 153 in rotating around its own shoe 152 shifts towards the position Y′. To said position Y′ of the lever 153 there corresponds the position *y* of the slide 164 which controls the maximum length of stitch in forward feed as permitted by the machine.

To intermediate positions of the button 176 there correspond obviously intermediate stitch lengths.

It is apparent that also during the above said hand control it is possible to rotate the button 176 in such a manner as to take its mark of reference — (minus) to correspond with the index 177. With said rotation the lever 153 inclines towards the position W′ which brings the pin 155 to control a slight feed of cloth in backward direction, as determined by the corresponding position *w′* of the slide 164.

In addition to the means hereinbefore described, the stitch-adjusting device also comprises the push-button 178 which may be coaxial with the button 176 and with the cam 175 (FIG. 21).

The stem 179 of said push-button 178 is connected to the upper end of a lever 180 by the pin 181. Said lever 180 is freely fulcrumed on the pin 157 and rests with its bottom end 182 on the pin 155 of the lever arm 156 (FIG. 18).

When the lever 153 is in its middle position X (FIG. 23) the pin 181 presses against the side 183 of the lever 153 and contemporaneously the lower end 182 of the lever 180 presses upon the pin 155.

In such conditions any pressure exerted upon the push-button 178 is ineffective.

If instead the lever 153 is placed in any intermediate position between X and Y′ depending on the position of the button 176, the full pressure exerted upon the push-button 178 pushes the pin 181 against the side 183 and rotates the lever 180 around the pin 157 in such a way that the end 182 of said lever 180 displaces the pin 155 to a position which with respect to the middle position, is symmetrical to that controlled by the end 154 of the lever 153.

By exerting a pressure upon the push-button 178, therefore, one controls a stitch-length in backward feed corresponding to the length of a stitch in forward feed as controlled by the button 176.

As soon as the push-button 178 is released, the lever 180 becomes inoperative again and the spring 167 returns the pin 155 against the end 154 of said lever 153, thereby restoring the conditions for feeding the cloth forward.

Detachment and Translation of the Feelers

In the description above of the "transverse displacements of the needle bar" it was said that when the handle 63 (FIG. 6) is displaced gradually towards the right between the numerals "0" and "5" marked above the slot 64, the body 61 fixed to said handle contacts the projection 59 of the lever 56 with gradually increasing radii of the profile 60 (FIGS. 4 and 5) and so controls the sliding of the bar 12 within the groove 14 of the lever 15, towards the axis of the pins 17, determining at the same time the contact between the feeler 46 and the cams of the pile of cams 51.

If the handle 63 is brought completely towards the right (FIG. 6) in correspondence with the letter "D" marked on the said graduation of the slot 64, the body 61 brings into correspondence with the projection 59 the maximum radius of the profile 60.

In this condition the shoe 12 shifts within the groove 14 of the lever 15 beyond the axis of the pins 17 and rotates said lever 15 around said axis until bringing it against the stop 184 provided on the upper arm of the forked lever 16 (FIGS. 4 and 5).

At the same time, the feeler 46 abandons contact with the cams of the pile of cams 51.

The body 61 (FIG. 25) carries in addition to the profile 60 also the teeth 185 and 186 respectively cooperating with the upright 31 and with the projection 147. The upright 31 as said is fixed to the lever 29 carrying the two feelers 28 and 32 (FIGS. 4 and 5).

The projection 147 as said is adapted to control the detaching of the feeler 148 from the cam 150 and from the fixed point 149 of the frame 1 (FIG. 18).

For positions of the handle 63 between the numerals "0" and "5" of the graduations of the slot 64 said teeth 185 and 186 do not interfere with said upright 31 and with said projection 147.

When instead the handle 63 has shifted completely towards the right in correspondence with the letter D, the tooth 185 rotates the upright 31 around the shaft 30 in such a way as to detach the feeler 32 of the lever 29 from contact with the cams of the pile of cams 33 (FIGS. 4 and 5). This may be done because as already mentioned the lever 15 has rotated in the meantime around the axis of the pins 17 and is against the stop 184.

In analogous way, the tooth 186 presses upon the projection 147 and rotates the forked lever 141 around the pin 139, thereby causing the detaching of the feeler 148 of the plate 138 from the fixed point 149 or the cam 150 (FIG. 18).

In addition to the above cited profile 60 and to the teeth 185 and 186 the body 61 carries also a further profile 187 against which presses the projection 188 of a rocker 189 by the effect of the spring 190 anchored to said rocker and to the frame 1. Said rocker 189 is fulcrumed to the frame 1 by the pin 58 (FIG. 24).

For positions of the handle 63 between the numerals "0" and "5" of the graduation of the slot 64 said profile 187 presents constant radii in contact with the projection 188. When instead the handle 63 is displaced completely towards the right, said profile carries into contact with the projection 188 a portion such as to disengage the blade 191 of said rocker 189 from the teeth of the toothed means 192 and 193 coaxial with the shaft 117 (FIG. 24).

Said toothed means 192 and 193 are fixed respectively with the control buttons 131 and 194 which issue in part from the slots 195 and 196 of the frame 1.

The button 194 is loose on the shaft 117 and is fixed to the toothed wheel 197 which engages with the toothed wheel 198 fixed in turn on the shaft 45 (FIG. 4). Every rotation of the button 194 then is translated into a rotation of said shaft 45 and, therefore, into a translatory movement of the feeler 46 along the helix 50 of said shaft.

The button 131 is fixed to the shaft 117 and rotates the drum 113. On said drum there is provided a helix 199 with which is engaged the small pin 100 fixed on one end of the rocker 201 (FIG. 4). Said rocker 201 is pivoted to the frame 1 by the pin 202 and carries at its other end a second small pin 203 engaged in the fork 204 provided at the lower end of the upright 31. Every rotation of the button 131 therefore is translated through the drum 113 and the rocker 201, into a translatory movement of the upright 31 and the lever 29 connected therewith along the axis of the shaft 30 and, therefore, into a translatory movement of the feeler 28 along the lever 15 and of the feeler 32 along the pile of cams 33.

Above in the description of the "rotation of the cams" it is said that the drum 113 is fixed to the ring 115 and that the peripheral surfaces of said drum and of said ring are interrupted respectively by the projecting step 114 and by the recess 116 which cooperate with the two arms 111 and 112 of the forked lever 108 which controls (FIG. 14) the rotation of the shaft 34 with continuous motion or with intermittent motion in unidirectional steps of adjustable amplitude.

The helix 199 and the projecting step 114 of the drum 113 in the machine illustrated by way of example are phased in such a way that the shaft 34 rotates intermittently by unidirectional steps when the feeler 32 moves by translatory movement in contact with the cams 33*a* and 33*b*, and rotates with continuous movement when the feeler 32 is in contact with the interchangeable cam 33*c*.

Above in the description of the "stitch-adjusting device" it is said that on the button 131 there is provided a cam 132 constituted by a plane surface suitably joined with the projection 133.

If the projection 134 of the lever 135 rests on the projection 133, the feeler 148 finds itself in contact with the interchangeable cam 150 (FIG. 18). If the projection 134 rests on the remaining plane surface of the cam 132, the feeler 148 finds itself in contact with the fixed point 149 of the frame 1. In the first case the adjustment of the transport of the fabric will be effected automatically except for possible initial adjustments effected through the button 176, while in the second case said adjustment will be effected by hand, through the same button 176.

In the machine illustrated by way of example the button 131 is fitted onto the shaft 117 in such angular position that the projection 134 of the lever 135 reaches the projection 133 of the cam 132 and therefore positions the feeler 148 in contact with the interchangeable cam 150 at the same time at which the helix 199 of the drum 113 controls the translatory movements of the feeler 32 in contact with the interchangeable cam 33*c*. For every other position of the feeler 32, the feeler 148 instead finds itself in contact with the fixed point 149.

The automatic adjustment of the transport of the cloth therefore occurs when the shaft 34 rotates with continuous movement with constant ratio of transmission in respect to the upper shaft 2.

The constancy of the ratio of transmission permits as is well-known to make sewing designs with which the needle is required to penetrate into the cloth in always accurately predetermined positions; it permits for instance to provide the design of sewing as illustrated in FIG. 28 wherein the needle 4 must penetrate a number of times in the same point of the fabric. In that figure with "*p*" are indicated the points at which the needle penetrates a number of times.

The sewing design illustrated in FIG. 28 is obtained thanks to the combination of cyclic displacements of the needle 4 in the transverse direction "*a*" and of reversals of cloth feed by action of the feeder 6, conveniently phased with one another.

It is known that the cams 33*c* and 150 rotating with continuous movement will have to possess in analogy with the cam 24 toothed profiles and will have to be phased with respect to the upper shaft 2 in such a way as to bring to correspond with their own feelers portions of profile with constant radius at the instants at which the needle 4 is passed into the cloth and portions of profile with radius variable only at the times at which the needle is safely out of said cloth. The other cams of the machine which are destined to rotate with unidirectional movement in steps of adjustable amplitude, may have instead profiles varied in any manner since the needle penetrates into the cloth only in the intervals between one step and the other step, thanks to the convenient phasing of the eccentric 68 on the upper shaft 2, as explained in the "rotation of the cams."

To move the feelers by translatory movement along the piles of cams, one proceeds as follows: one displaces the handle 63 in correspondence with the letter "D" marked on the graduation of the slot 64.

By this operation the profile 60 of the body 61 acts upon the projection 59 of the lever 56 in such a manner that the bar 12 goes beyond the axis of the pins 17 of the lever 15 and at the same time the feeler 46 detaches from the cams 51.

At the same time the tooth 185 of said body 61 rotates the upright 31 with the lever 29 around the shaft 30 in such a way that the feeler 32 of said lever detaches from the cams 33.

The other tooth 186 of said body 61 causes in the meantime the rotation of the rocker 189 in such a manner that the blade 191 of said rocker detaches from the toothed means 192 and 193 fixed respectively to the but-

tons 131 and 194 in such a manner that the latter can be rotated.

Finally the profile 187 of said body 61 causes through the forked lever 141 the detaching of the feeler 148 from the fixed point 149 or from the cam 150. With the rotation of the button 194 is controlled the translation of the feeler 46 along the pile of cams 51.

With the rotation of the button 131 are controlled contemporaneously the translation of the feeler 32 along the pile of cams 33 and possibly the translation of the feeler 148 and the passage from the intermittent rotation to the rotation with continuous movement of the shaft 34 or vice versa.

Once the feelers are brought to contact with the desired cams, the handle 63 is brought again towards the left, in correspondence with the numerals from "0" to "5" of the graduation reported on the slot 64.

To check the accurate positioning of the feelers at contact with the selected cams now a further rotation of the buttons 131 and 194 may be attempted. If that positioning is not accurate, the two buttons may rotate until the blade 191 of the rocker 189 engages with the toothings of the toothed means 192 and 193 fixed with the buttons mentioned. In that position of the blade 191, the two buttons cannot be rotated.

Searching and Reading of the Position of the Feelers

It is apparent that the two piles of cams 33 and 51 permit obtaining automatically as many sewing designs (patterns) as are the combinations of said cams two by two, in addition of course to the variation of the designs by adjustments as obtainable by hand on the above described control members.

In other words, every cam of the pile of cams 33 originates as many main patterns of sewing as there are cams of the pile of cams 51 and vice versa.

The search for the position of the feelers 32 and 46 corresponding to a determined embroidery design would be very cumbersome if there were not appropriate means for searching and reading.

It has been useful to have available an automatic searching means of the positions of the feelers or for reading the sewing patterns obtainable for every position of said feelers.

Said searching and reading means are realized in the following manner (FIG. 29): at the lower end of the shaft 117 there is fixed the ring 205 fixed, therefore, with the control button 131. At the periphery of said ring there is mounted by pressure the cylinder 206. The set screw 207 which fixes the ring 205 to the shaft 117 performs also the function of a key for dragging along the cylinder 206. The cylinder 206 is subdivided into as many vertical sectors as are the positions which the feeler 32 can assume, that is to say, as many as there are cams of the pile of cams 33, and faces the long slot 208 provided in the frame 1.

The rotations of the control button 131 brings into correspondence with said slot 208 any of said vertical sectors.

The cylinder 206 is subdivided moreover into as many horizontal sectors as are the cams 51 which may be scanned by the feeler 46 following the rotations of the control button 194. In that way, from the intersection of the vertical sectors and horizontal sectors, the cylinder 206 is divided into as many zones 206′ as are the combinations of the positions of the two feelers 32 and 46 and in every zone there is represented diagrammatically the pattern of sewing corresponding to said positions.

Said feeler 46 is embraced by the fork 209 of a ring 210 slidable on the cylinder 206 and carrying a small frame 211 which frames through the slot 208 the diagrammatical representation of the sewing pattern obtainable for every determined position of the feelers 32 and 46.

To render the diagrammatical representations of the sewing patterns or designs more fully visible, the cylinder 206 is made of transparent material and is illuminated at bottom by a small lamp 212 applied on a support 213 fixed to the base 7 of the frame 1.

The lamp 212 is conveniently screened at the bottom to increase illumination in the interior of the cylinder 206.

To create a greater uniformity in the illumination, the cylinder 206 is hollow inside, with a conical cavity 214 having its vertex at the bottom, in the proximity of the lamp.

I claim:

1. A sewing machine comprising a frame, a first shaft mounted in said frame, means for continuously rotating said first shaft, a needle bar mounted for transverse displacement in said frame, a second shaft rotatably mounted in said frame, a cam stack fixed to said second shaft, means including said cam stack controlling the transverse displacements of said needle bar, a third shaft mounted in said frame, means for driving said third shaft unidirectionally with intermittent steps, means for adjusting the amplitude of the intermittent steps of said third shaft, means for selectively connecting said second shaft with said first shaft and said third shaft, said last named means comprising a first gear rotatably mounted on said second shaft constantly driven by said first shaft, a second gear rotatively mounted on said second shaft constantly driven by said third shaft, a slidable sleeve mounted slidably and non-rotatively on said second shaft between said gears having means for engaging selectively said first and second gears, a pair of spaced collars upon said sleeve, a fork engaged between said collars, feelers contacting the cams in said cam stack, a single hand control, means connected to said hand control to cause at least one feeler to slide in correspondence with the respective cams and means connected to said hand control to displace said fork and thereby said sleeve to one or the other position corresponding respectively to a continuous or an intermittent rotary movement of said second shaft.

2. A sewing machine having means for feeding the material sewed and means for oscillating a needle bar comprising a rotating first shaft actuating the vertical reciprocating motion of said needle bar, a plurality of cams, means interconnecting said rotating shaft selectively with said cams, means controlled by said cams controlling the transverse oscillations of said needle bar and the regulation of said feeding means, manual means for selecting a cam from said plurality of cams for operating said means controlled by said cams, means for driving said cams comprising a second shaft upon which said cams are mounted, a third shaft, means for intermittently rotating said third shaft with steps of adjustable amplitude, clutching means to connect said second shaft selectively with said first shaft or said third shaft and means controlling said clutching means operated by said manual means.

3. A sewing machine as set forth in claim 2 wherein said clutching means comprises a pair of spaced gears loosely mounted on said second shaft, a gear fixed to said first shaft in constant engagement with one of said pair of gears, a gear fixed to said third shaft in constant engagement with the other of said pair of gears, a sleeve slidably and nonrotatably mounted on said second shaft located between said pair of spaced gears and said means controlling said clutching means being connected to said sleeve.

4. A sewing machine as set forth in claim 3 wherein spaced collars are provided upon said sleeve, a fork is located between said collars for moving said sleeve axially along said second shaft and elastic means are interposed between said manual means and said fork.

5. A sewing machine as set forth in claim 2 wherein at least one cam of said plurality of cams cooperating with said means controlling the transverse oscillation of said needle bar is loosely mounted on said second shaft and is driven by said first shaft.

6. A sewing machine as set forth in claim 3 wherein one cam of said plurality of cams is fixed to the gear of said pair of spaced gears which is in constant engagement with said fixed gear on said first shaft.

7. A sewing machine as set forth in claim 2 wherein said plurality of cams comprise a first assembly of cams and a second assembly of cams and said means controlled by said cams controlling the tranverse oscillations of said needle bar and the regulation of said feeding means comprise a pivoted member controlled by said first assembly of cams, a bar connected to said needle bar having a point movable slidably along said member also controlled by said first assembly of cams, said second assembly of cams controlling the regulation of said feeding means, a feeler cooperating with each assembly of cams, means for shifting said feelers along their corresponding cam assemblies and said manual means for selecting a cam comprising a unitary manual control for shifting said feelers along said cam assemblies and adjusting said bar slidably along said member to vary said transverse oscillations.

8. A sewing machine as set forth in claim 7 wherein means are provided to actuate said clutching means by said unitary manual control.

9. A sewing machine as set forth in claim 7 wherein two interchangeable cams are mounted at one end of said second shaft and means are provided cooperating with said interchangeable cams to vary the transverse oscillations of said needle bar and to vary said feeding means for feeding the material.

10. A sewing machine as set forth in claim 9 wherein two feelers are provided cooperating with said interchangeable cams and means are provided connecting said feelers with said means controlled by said plurality of cams controlling the transverse oscillations of said needle bar and the regulation of said feeding means.

11. A sewing machine as set forth in claim 10 wherein a hand control is provided for shifting said feelers cooperating with said interchangeable cams and means are provided cooperating with said hand control to release said manual means for selecting a cam only when said single hand control is in a predetermined position.

12. A sewing machine as set forth in claim 2 wherein visual means are provided cooperating with said manual means for selecting a cam to indicate the particular stitch for which the machine is set.

13. A sewing machine as set forth in claim 12 wherein said visual means is provided on a roller pivotally mounted in the frame of the machine.

References Cited in the file of this patent

UNITED STATES PATENTS

2,854,935	Benink et al.	Oct. 7, 1958
2,905,119	Bono	Sept. 22, 1959
2,966,869	Fischer	Jan. 3, 1961
2,976,830	Vigorelli	Mar. 28, 1961
2,979,002	Casas-Robert et al.	Apr. 11, 1961

FOREIGN PATENTS

178,259	Austria	Apr. 26, 1954
537,121	Belgium	Apr. 30, 1955
339,472	Switzerland	Aug. 31, 1959

OTHER REFERENCES

German patent application, Gritzner, 1,049,211—Jan. 22, 1959, K1 52a 9/01.