Oct. 11, 1938. W. HOBSON ET AL 2,132,470

TRACK RAIL GRINDING MACHINE

Filed Oct. 3, 1936 4 Sheets-Sheet 1

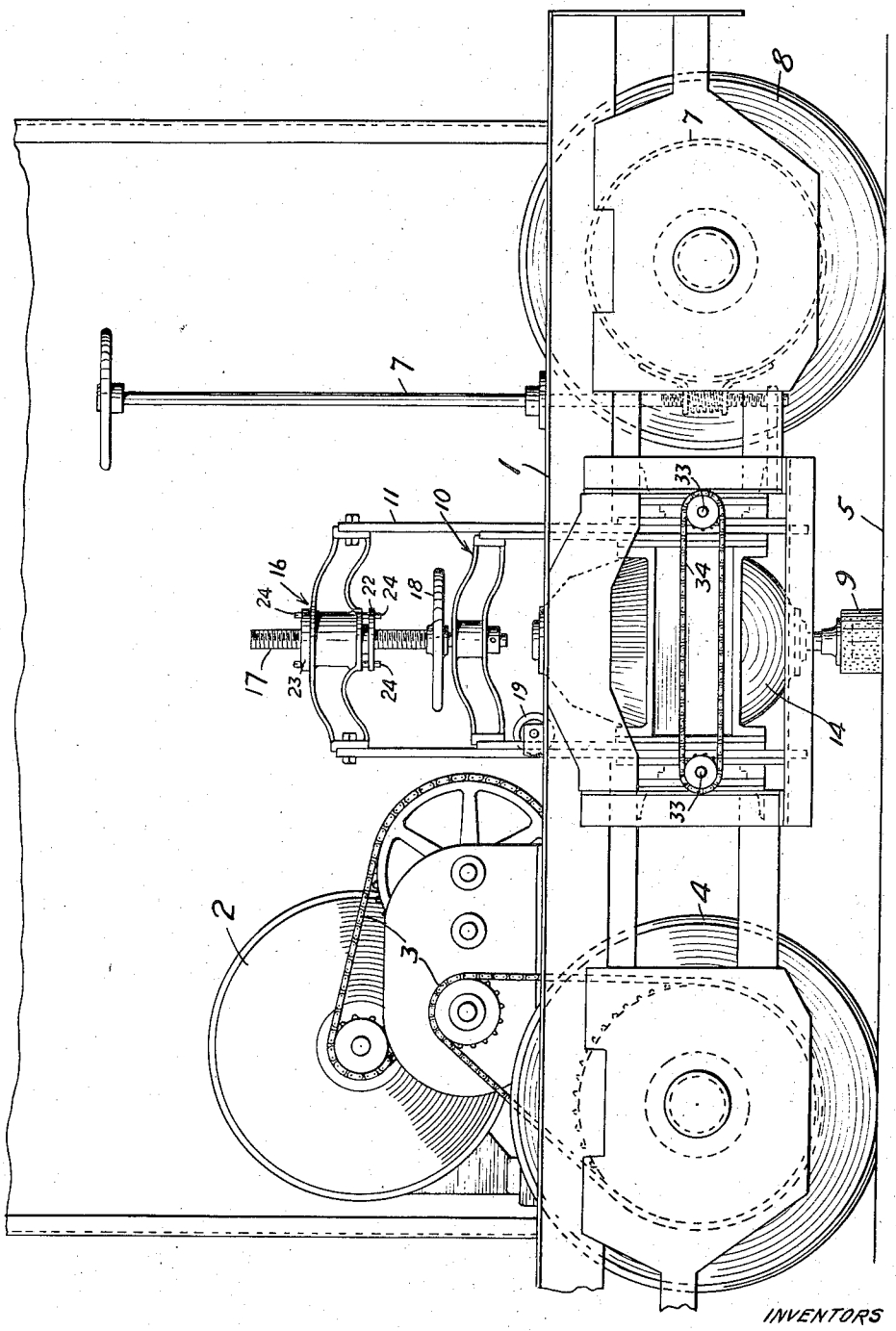

FIG. 1.

WITNESS:
Robt R. Kitchel.

INVENTORS
Walter Hobson and
Homer H. Woodrow
BY
Augustus B. Stoughton
ATTORNEY.

Oct. 11, 1938. W. HOBSON ET AL 2,132,470

TRACK RAIL GRINDING MACHINE

Filed Oct. 3, 1936 4 Sheets-Sheet 2

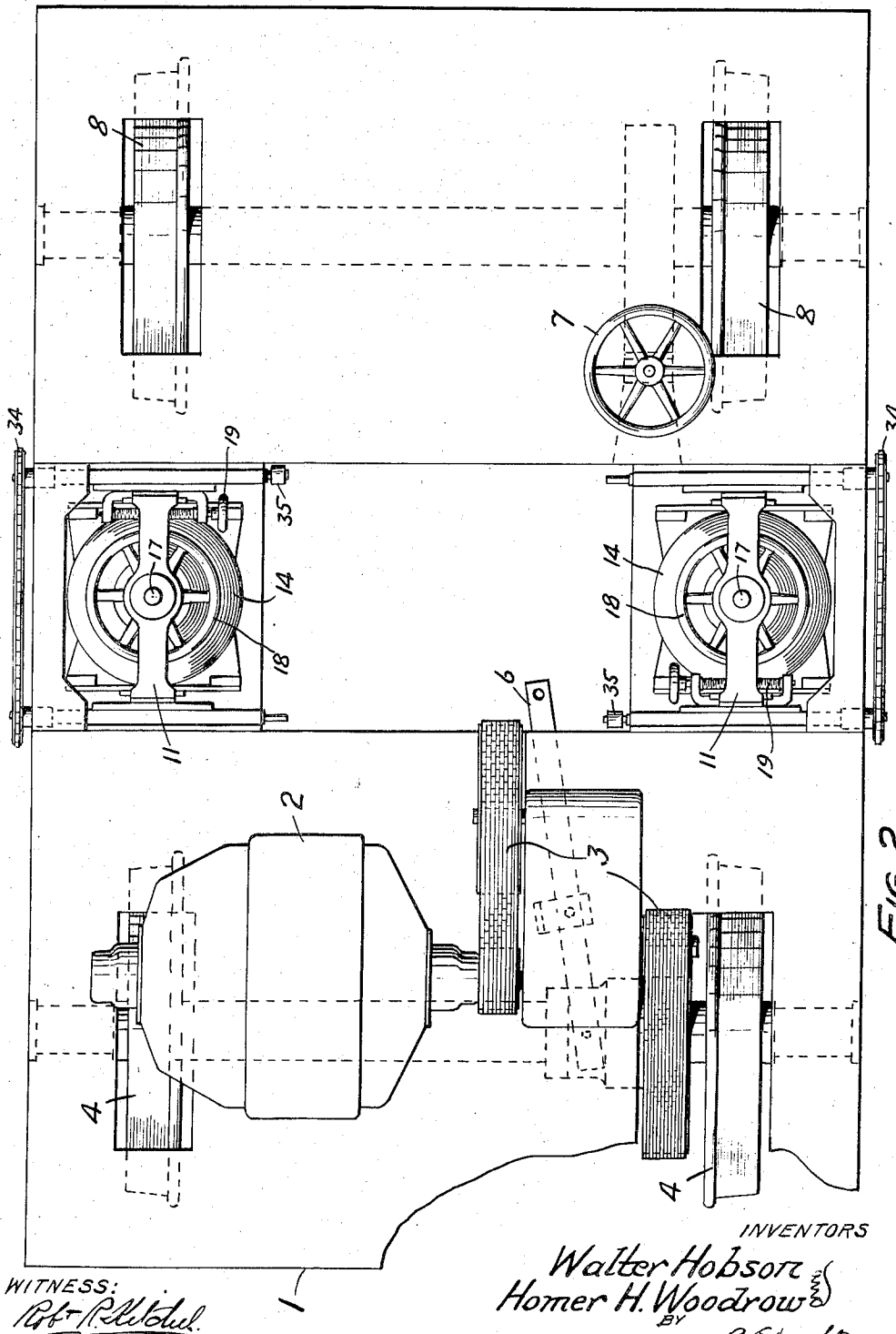

FIG. 2.

WITNESS:
Robt. R. Webb

INVENTORS
Walter Hobson
Homer H. Woodrow
BY
Augustus B. Stoughton
ATTORNEY.

Oct. 11, 1938. W. HOBSON ET AL 2,132,470

TRACK RAIL GRINDING MACHINE

Filed Oct. 3, 1936 4 Sheets-Sheet 3

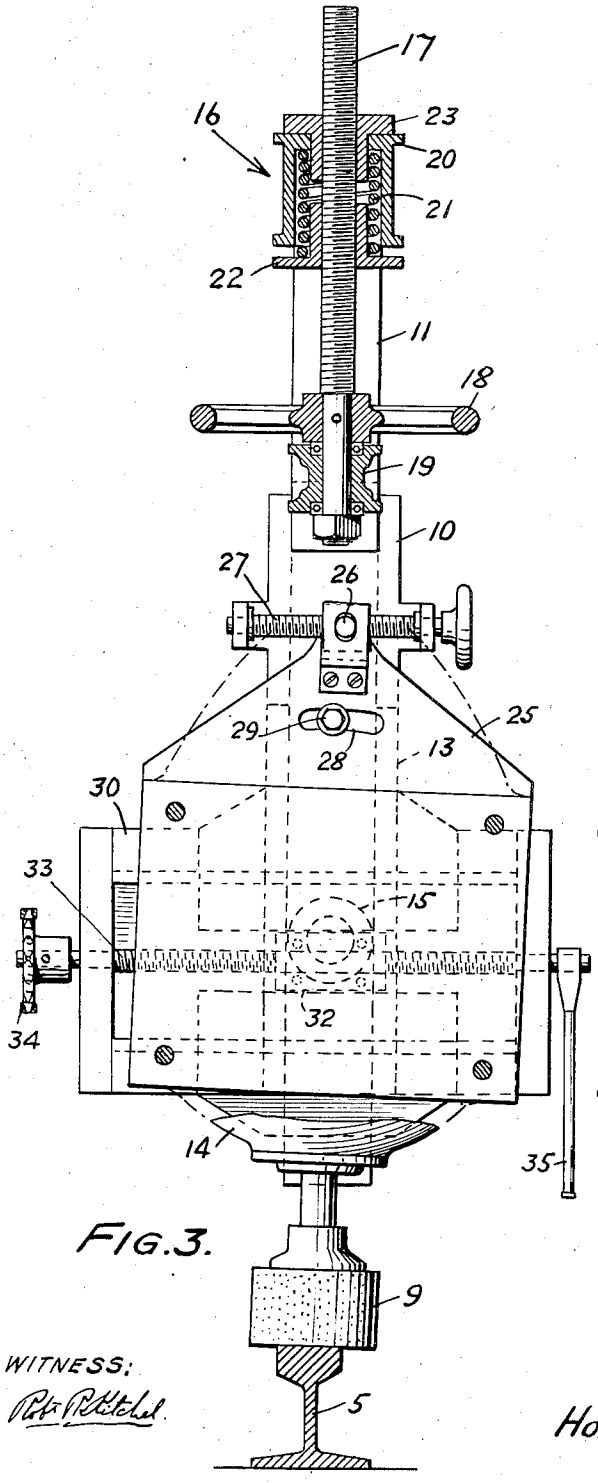

FIG. 3.

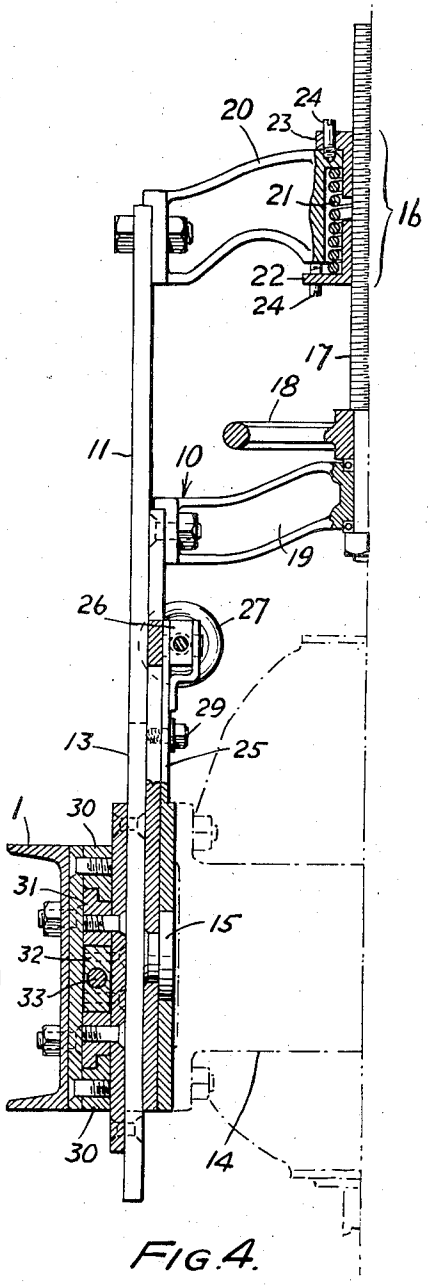

FIG. 4.

WITNESS:

INVENTORS

Walter Hobson
Homer H. Woodrow
BY
Augustus B. Stoughton
ATTORNEY.

Oct. 11, 1938. W. HOBSON ET AL 2,132,470

TRACK RAIL GRINDING MACHINE

Filed Oct. 3, 1936 4 Sheets-Sheet 4

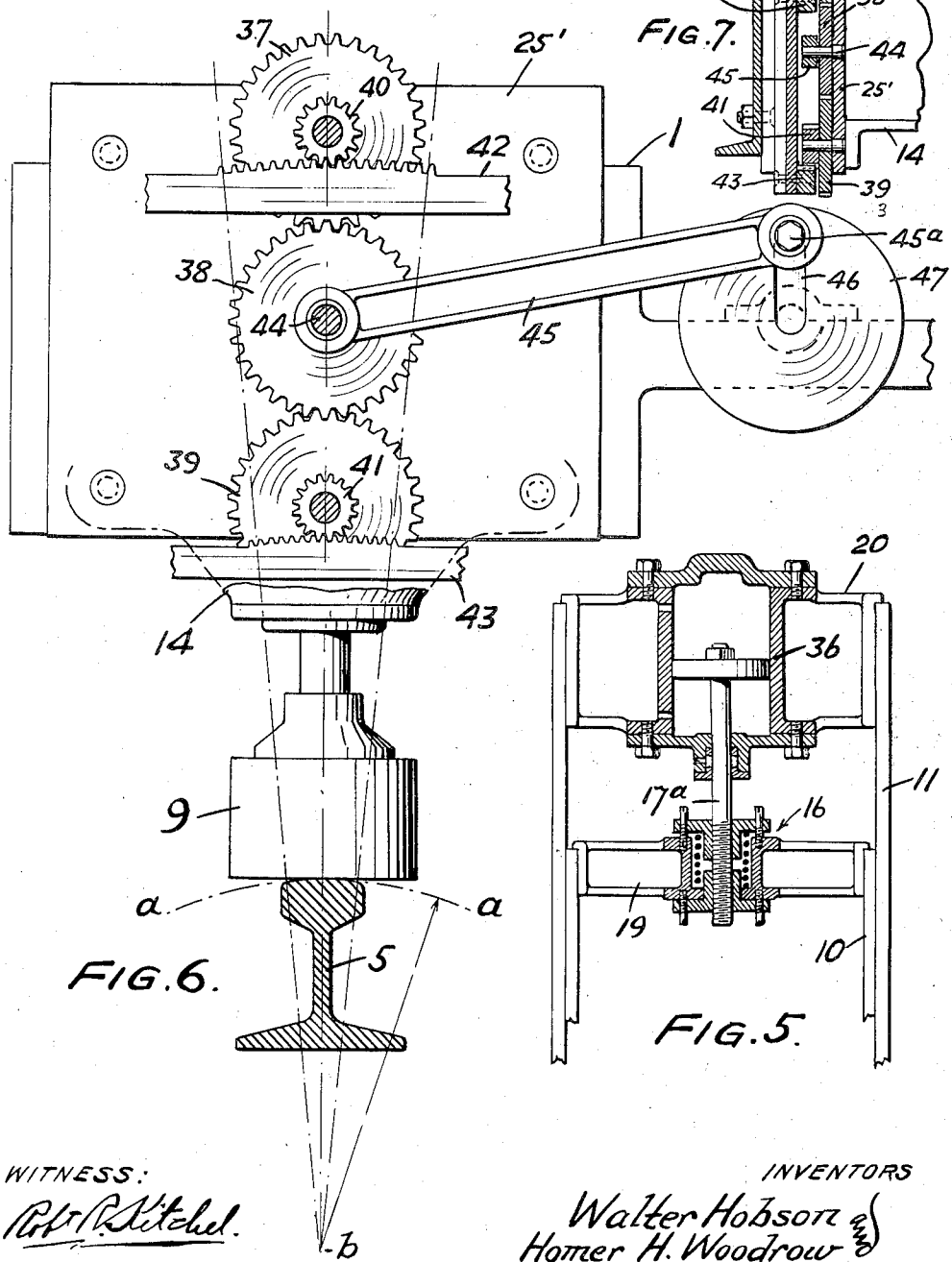

FIG. 6.

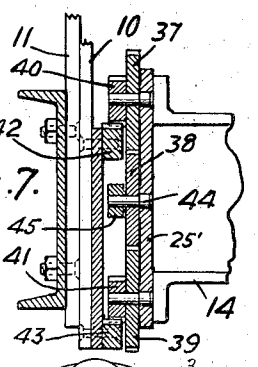

FIG. 7.

FIG. 5.

WITNESS:
Robt. R. Mitchell.

INVENTORS
Walter Hobson and
Homer H. Woodrow
BY
Augustus B. Stoughton
ATTORNEY

Patented Oct. 11, 1938 2,132,470

UNITED STATES PATENT OFFICE

2,132,470

TRACK RAIL GRINDING MACHINE

Walter Hobson, Philadelphia, Pa., and Homer H. Woodrow, Milford, Del.

Application October 3, 1936, Serial No. 103,811

7 Claims. (Cl. 51—178)

One object of the present invention is to provide a track rail grinding machine of the type in which there is a motor driven grinding wheel of which the face confronts the rail head, and in which there are provided simple, reliable and efficient means not only for adjusting the grinding face of the grinding wheel crosswise of the rail and for changing the inclination of the axis of the grinding wheel crosswise of the rail to shape the head of the rail as desired, but also for adjusting the face of the grinding wheel upward and downward in respect to the head of the rail. Another object of the invention is to provide for efficiently cushioning the thrust of the axis of the grinding wheel due to undulations in the head of the rails in the direction of their lengths. Another object is to provide for mounting grinding units having the characteristics and capabilities indicated upon a railway car that travels or is propelled along the track rails.

Other objects of the invention will appear from the following description at the end of which the invention will be claimed.

Generally stated the invention comprises, for use with a track rail grinding machine mounted on a railway car and having motor driven grinding wheels of which the faces confront the rail heads, units each comprising, upright yokes slidable in respect to each other, a motor frame pivoted in the inner yoke for tilting movement crosswise of the car, and means for moving and adjusting the parts.

The invention also comprises the improvements to be presently described and finally claimed.

In the following description reference will be made to the accompanying drawings forming part hereof and in which:

Figure 1 is a side elevational view of a track rail grinding machine embodying features of the invention with a cover plate for the motor removed.

Figure 2 is a top or plan view of the same.

Fig. 3 is an elevational view drawn to an enlarged scale and partly in section taken crosswise of the rails and showing a grinding unit embodying features of the invention.

Fig. 4 is a sectional view taken at right angles to Fig. 3 and illustrating one half of the mechanism of which the other half is a duplicate.

Fig. 5 is a view looking in the direction of crosswise of the car and showing a modification in which power means are provided for raising and lowering the grinding wheel.

Fig. 6 is an elevational view looking lengthwise of the car and with parts removed and showing a modification in which the grinding wheel is tilted constantly or intermittently.

Fig. 7 is a detail central sectional view of Fig. 6 drawn to a reduced scale with parts shown which are omitted from Fig. 6 for the sake of clearness.

Referring to the drawings and more particularly to Figs. 1 to 4, 1 indicates a railway car shown as provided with a motor 2 having gearing 3 by which it drives the traction wheels 4 of the car on the rails of the track indicated at 5. 6 indicates a clutch for connecting and disconnecting the motor and the driving wheel. 7 indicates bandbrake mechanism arranged for operation on the carrying wheels 8 of the car. The described construction may be greatly modified and it is perhaps accomplished by pretty much any kind of a car adapted to travel slowly along the track of which the rail heads are to be ground or dressed particularly for the removal of undulations ranging in the direction of the length of the rail. 9 are motor driven grinding wheels of which the work faces confront the rail heads. The grinding units include those grinding wheels and will now be described.

10 and 11 are nested yokes or frames mounted on the car and of which the inner one 10 is slidable in respect to the outer one 11. For this purpose ways 13, Fig. 3, are provided. 14 is a motor frame carrying the motor and a grinding wheel 9 and it is pivoted to the inner yoke 10 for tilting motion crosswise of the car. The pivots are indicated at 15. 16 indicates, collectively a spring pressed screw and adjusting nuts, interposed between the yokes 10 and 11 for cushioning the motor frame vertically. The screw 17 is provided with a hand wheel 18 for turning it in a bearing in the cross piece or head 19 of the yoke 10 and in this bearing the screw is held against endwise motion. In the cross piece or head 20 of the yoke 11 there is a chamber in which is mounted a spring 21 of which the upper end bears on the head 20 and the lower end bears on the flange of a screw collar 22 mounted on the screw 17. There is a second screw collar 23 mounted on the screw 17 and overlying the yoke 20. This construction provides a spring cushion for taking the upward thrust of the screw and parts which it carries. The screw and parts carried by it can be adjusted vertically in respect to the spring 21 by means of the collars 22 and 23, and after the adjustment is made the collars are held against turning and for this purpose pins 24 are shown. There are adjusting means interposed between the motor frame 14 and the

inner yoke 10 for tilting the motor frame crosswise of the rails. These means are shown to comprise an extension 25 on the motor frames. On this extension is mounted for freedom of limited turning and raising and falling motion a nut 26, and a screw 27 is carried by the inner yoke 10 in such a way that it can be turned but may not move endwise. This is a means for rocking the motor. Between the extension 25 and the inner yoke 10 there is a curved slot 28 and a clamping screw 29. This is a locking device for said rocking means. Elements of the frame 1 of the car carry ways 30 which range crosswise of the car. In these ways the feet 31 of the outer yoke 11 slide and the ways and feet serve to maintain the yokes in upright position. The feet 31 of the yoke 11 include a nut 32, and crosswise ranging screws 33 engage these nuts 32 and when turned serve to shift the yokes crosswise of the car. The screws 33 are geared together at one end by sprocket wheels and a sprocket chain 34, Fig. 1, and one of the screws 33 may be turned by a pawl and ratchet and lever 35.

In use the grinding wheel 9 may be vertically adjusted properly with respect to the rail 5 by manipulation of the hand wheel 18. The upward thrust on the face of the grinding wheel 9 by lengthwise undulations in the rails is cushioned by the spring combination 16. It may be remarked that with the use of a relief spring 16 there is a preloading of the grinder unit over and above the dead weight pressure of the parts pressing the grinding wheel to the rail. This preloading results in the removal of the wave crests that occur in longitudinal direction in used rails, and in the valleys of the wave the pressure of the spring lessens, so that a straight level profile is produced. It will, of course, be understood that the car travels slowly along the rails and that these lengthwise undulations are dressed or ground. It is sometimes desired to dress the upper face of the head of the rail at a slight inclination to the web of the rail. This is indicated in Fig. 3. To accomplish this the motor frame 14 is tilted as desired by adjustment of the screw 27. It may be remarked that the grinder 9 may be tilted to dress the head of the rail as may be desired. To position the grinding wheel 9 when tilted properly over the rail the pawl and ratchet lever 35 and its connections are operated and they move the yokes and parts carried thereby crosswise of the car. Thus the grinding wheel may be properly positioned vertically over the rail head. It may be remarked that since both frames or yokes 10 and 11 are always in upright or vertical position and are mounted against rocking movement, and since the motor frame is centrally pivoted to, or otherwise adapted for rotary movement in respect to, the inner frame, it follows that the movement of the grinding unit as a whole is always in a vertical line no matter at what angle the axis of the grinding wheel may have been set in respect to that line.

The construction and mode of operation of the modification shown in Fig. 5, are as above described, except that the combination spring mechanism 16 is transferred to the head or cross piece 19, of the inner yoke 10, and the element 17a is moved up and down endwise by a power cylinder and piston 36 carried by the head 20 of the yoke 11.

The construction and mode of operation of the modification shown in Figs. 6 and 7 are as above described except as follows:

The yoke 11 is immovably fastened to the element 1, Fig. 7. The motor frame 14, is not turnable about a fixed pivot 15 as shown in Fig. 4 but is connected for turning movement with the inner sliding yoke. The motor frame 14, or more accurately an extension 25' thereof carries a train of intermeshing duplicate gear wheels 37, 38, and 39, Fig. 6, and the gear wheels 37 and 39 carry pinions 40 and 41. The pinions 40 and 41 run on curved racks 42 and 43 struck from a common center indicated at *b*, and fixed to the yoke 11 and therefore held stationary. The toothed wheel 38 is turnable in respect to a stud 44 mounted on the extension 25' and one end of the connecting rod 45 is connected to the stud 44. The other end of the connecting rod is connected to a clampable pivot pin 45a mounted in a radial slot 46, in a power driven disc 47 revolvable about an axis fixed in the frame 1. There are two such mechanisms one at each leg of the yoke 11. It may be remarked that Fig. 6 is a view looking towards the right in Fig. 7 with all the stationary parts to the left of the racks 42 and 43 removed.

Assuming that the disc 47 is in rotation the connecting rod shifts the motor frame 14 and extension 25' back and forth from left to right and right to left in Fig. 6, and the pinions 40 and 41 ride on the fixed curved or arcuate racks 42 and 43, thus the axis of the grinding wheel 9 indicated by dash and dot lines occupies the positions of those lines and the face of the grinding wheel 9 is effective in the curved dash and dot line *a—a* dressing the head of the rail 5 to a symmetrical curved surface. The throw of the connecting rod 45 and therefore the amplitude of oscillation of the axis of the grinding wheel can be adjusted by variously positioning the clampable pin 45a in the slot 46. The mechanism last described is a means for rocking the motor. If desired the axis of the grinding wheel can be held stationary in vertical or inclined position by turning the disc 47 appropriately and then holding it at rest. The construction last described is a locking device or clamp for said rocking means.

It will be obvious to those skilled in the art to which the invention relates that modifications may be made in details of construction and arrangement and in matters of mere form hence the invention is not limited otherwise than the prior art and the appended claims may require.

We claim:

1. In a track rail grinding machine mounted on a railway car and having motor driven grinding wheels of which the faces confront the rail heads, units each comprising, in combination, upright yokes slidable in respect to each other for vertical movement only and mounted on the car for movement crosswise of the car, a motor frame pivoted to the inner yoke for tilting movement crosswise of the car, the axis of the grinding wheel intersecting the axis of the pivot of the motor frame and means for moving and adjusting said parts.

2. In a track rail grinding machine mounted on a railway car and having motor driven grinding wheels of which the faces confront the rail heads, units each comprising, in combination, upright yokes vertically slidable in respect to each other, supports for attaching said yokes to said car so that said yokes are movable crosswise of the car, a motor frame pivoted to the inner yoke for tilting movement crosswise of the car, and nut and screw means for moving and adjusting said parts.

3. For a track rail grinding machine mounted on a railway car and having motor driven grinding wheels of which the faces confront the rail

heads, units each comprising, in combination, upright yokes slidable in respect to each other and mounted for movement crosswise of the car, means for sliding the inner yoke, a motor frame pivoted to the inner yoke for tilting movement crosswise of the car, an extension on the motor frame, a screw carried by the inner yoke, a nut rockably and movably carried by the extension and engaging the screw and a curved slot and clamping screw provided between the inner yoke and the extension.

4. For a track rail grinding machine mounted on a railway car and having motor driven grinding wheels of which the faces confront the rail heads, units each comprising, in combination, upright yokes slidable in respect to each other and mounted for movement crosswise of the car, means for sliding one of said yokes, a motor frame pivoted to the inner yoke for tilting movement crosswise of the car, ways ranging crosswise of the car and carried by the frame thereof, feet on the outer yoke slidable in said ways, nut and screw means for shifting the feet in the ways, and means for synchronizing the operation of said nut and screw means including a pawl and ratchet hand lever and a sprocket chain and sprocket wheels.

5. For a track rail grinding machine mounted on a railway car and having motor driven grinding wheels of which the work faces confront the rail heads, units each comprising, in combination, upright nested yokes mounted on the car and of which the inner one is slidable in respect to the outer one and of which the outer one is provided with feet, means for sliding the inner yoke, a motor frame carrying the motor and one of said grinding wheels and pivoted to the inner yoke for tilting crosswise of the car, a spring pressed screw and nut interposed between the yokes for cushioning the motor frame vertically, adjusting means interposed between the motor frame and the inner yoke for tilting the motor frame, and ways positioned crosswise of the car and in which the feet of the outer yoke are slidable to move the motor frame crosswise of the car.

6. In a track rail grinding machine mounted on a railway car and having motor driven grinding wheels of which the faces confront the rail heads, units each comprising, in combination, upright frames slidable in respect to each other and each held vertically against rocking motion, means for sliding the inner frame, a motor frame connected for turning movement to the inner frame, and means for rocking the motor frame in respect to the inner frame.

7. In a track rail grinding machine mounted on a railway car and having motor driven grinding wheels of which the faces confront the rail heads, units each comprising, in combination, upright yokes slidable in respect to each other, a motor frame carried by the inner yoke, a rod element interposed between the heads of the yokes, a compression spring for the element, and means for moving the element in respect to the yokes.

HOMER H. WOODROW.
WALTER HOBSON.