C. L. FRENCH.

ATTACHMENT FOR BEDSTEADS.

APPLICATION FILED AUG. 9, 1918.

1,322,421.

Patented Nov. 18, 1919.

2 SHEETS—SHEET 1.

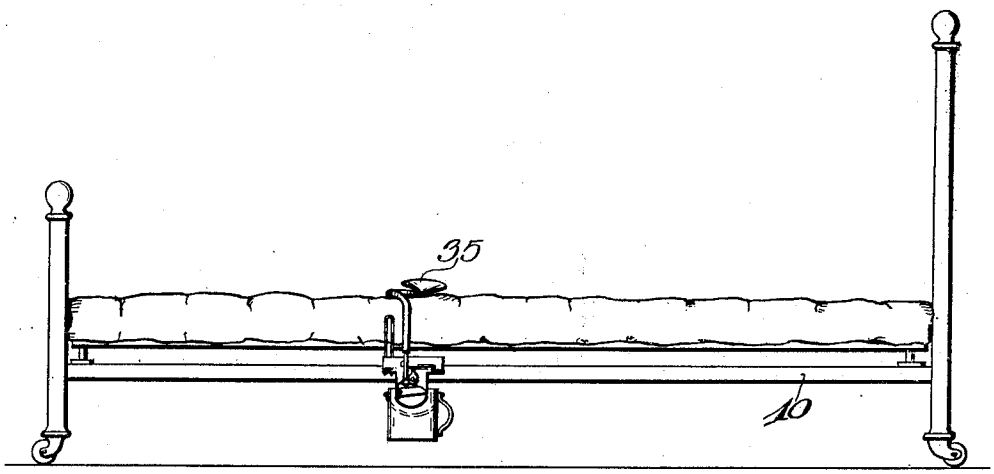

Fig. 1.

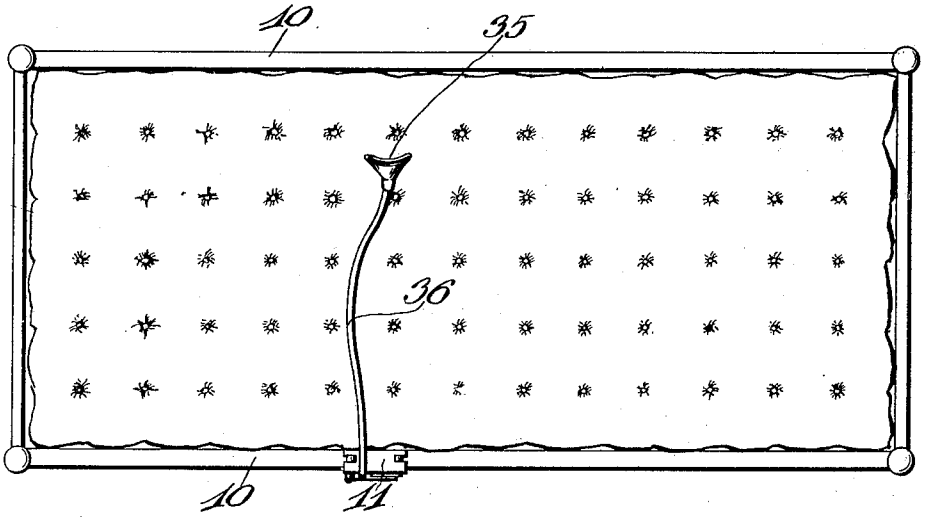

Fig. 2.

Charles L. French

INVENTOR.

By Mitchell Strauss & Co.

ATTORNEYS.

C. L. FRENCH.

ATTACHMENT FOR BEDSTEADS.

APPLICATION FILED AUG. 9, 1918.

1,322,421.

Patented Nov. 18, 1919.

2 SHEETS—SHEET 2.

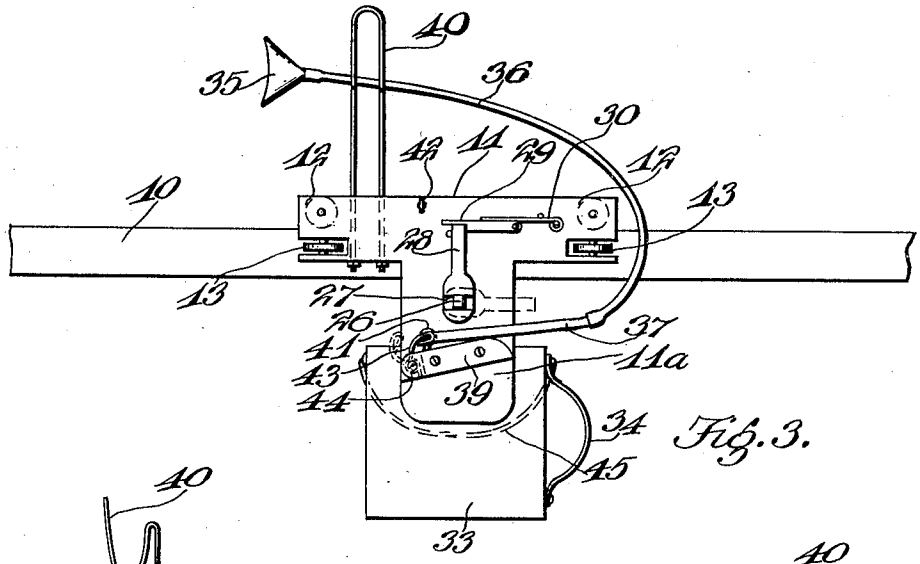

Fig. 3.

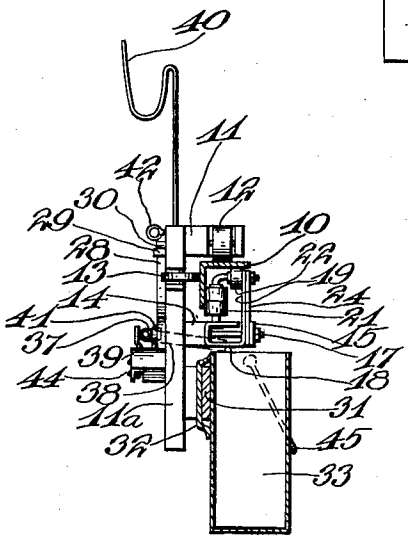

Fig. 4.

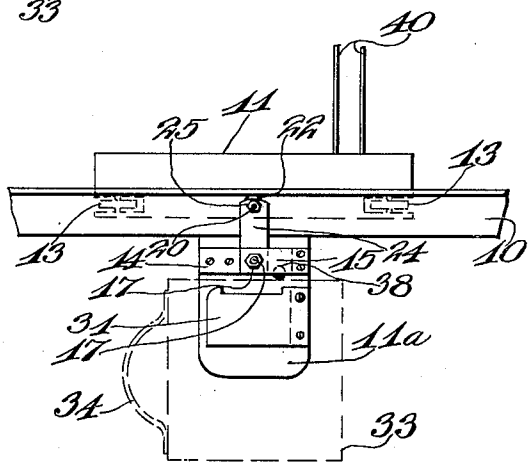

Fig. 5.

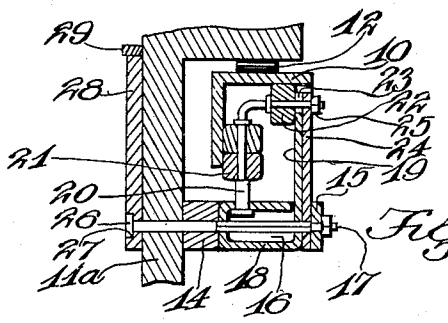

Fig. 6.

Charles L. French

INVENTOR.

By Wilbur R. Thomas et al.

ATTORNEYS.

UNITED STATES PATENT OFFICE.

CHARLES L. FRENCH, OF CHICAGO, ILLINOIS.

ATTACHMENT FOR BEDSTEADS.

1,322,421. Specification of Letters Patent. Patented Nov. 18, 1919.

Application filed August 9, 1918. Serial No. 249,191.

To all whom it may concern:

Be it known that I, CHARLES L. FRENCH, a citizen of the United States, residing at Chicago, in the county of Cook and State of Illinois, have invented new and useful Improvements in Attachments for Bedsteads, of which the following is a specification.

The attachment which is the subject matter of the present application is in the nature of a urinal, and the invention has for its object to provide a device of this kind which is applicable to a bedstead and which is handy and convenient, being readily adjustable so that it can be placed within easy reach of the occupant of the bed.

The object stated is attained by means of a novel combination and arrangement of parts to be hereinafter described and claimed, and in order that the same may be better understood, reference is had to the accompanying drawings forming a part of this specification.

In the drawings,

Figure 1 is an elevation of the device showing the same attached to a bedstead, and ready for use;

Fig. 2 is a plan view of the parts shown in Fig. 1;

Fig. 3 is an enlarged front elevation of the device;

Fig. 4 is an end view of the parts shown in Fig. 3;

Fig. 5 is a rear elevation of the device, and

Fig. 6 is an enlarged vertical section of a detail.

Referring specifically to the drawings, 10 denotes one of the side rails of a bedstead. On this rail is mounted for travel along the same, a supporting member or carriage consisting of a block 11 fitted with top rollers 12 seating on the top of the rail, and with side rollers 13 engaging the side of the latter. The block 11 also has a downward extension 11^a intermediate its ends, and at the rear, the block has an extension frame composed of sides 14 and 15, and one end 16, the other end being open, and the side 15 being shorter than the side 14. A transverse bolt 17 extends between the sides 14 and 15 and axially supports the looped end 18 of a stiff metal strip 19. The part 18 supports an L-shaped pin 20 carrying side rollers 21 and top rollers 22 engaging the inner surface of the rail 10, the latter being of angle or L-shaped cross section. In order that the upper end of the pin 20 may take the roller 22, and then fit the strip 19, the latter has a slot bearing 23 at the top. A strip 24, apertured at the top, is then applied to hold the pin down, a nut 25 being applied to the outer end of the latter.

As shown in Fig. 6, the bolt 17 is squared where it carries the loop 18, so that turning of the bolt will bodily swing the parts supported thereby between the sides 14 and 15 of the rear frame, to horizontal position, whereupon they clear the bottom of the rail 10 and enable the device to be removed therefrom.

The bolt 17 also runs through the part 11^a, and here has a square head 26 seating in a cross slot 27 of a lever 28. Hence, when this lever is operated by hand, and swung to the position shown dotted in Fig. 3, the bolt is turned for the purpose of releasing the device from the rail 10 as just described.

The lever 28 is held locked normally by a top detent 29 held pressed down by a leaf spring 30. Thus, the detent must be raised off the lever 28 before it can be swung as described.

The rear of the part 11^a has a spaced hook 31 engageable with a keeper strap 32 on a receptacle 33, provided with a handle 34 to permit a short lift to release the part 32 from the hook 31 for removal of the receptacle to discharge its contents.

A duct for the transfer of liquid to the receptacle 33 starts with a flat funnel 35 having an arcuate rim to fit the body. From the funnel leads a flexible tubing 36 which terminates in a rigid tube 37 having a lateral bend 38 at its end which is inserted through the part 11^a just above the receptacle 33 and positioned to discharge into the latter.

The tube 37 rests on a shelf 39 when the device is not in use, as shown in Fig. 3, and the tubing 36 is held in a wire supporting hook 40 rising from the block 11.

Prior to its passage through the part 11^a, the portion 38 of the tube 37 passes through a screw-eye 41 mounted on the shelf 39, a sufficient distance in front of the part 11^a to permit the tube to clear the lever 28. Another screw-eye 42 is placed above the screw-eye 41 to form a stop for the swing of the tube 37. During either position of the tube 37, a loop 43 in front of its angle keeps it from backing out of the part 11^a. The loop 43 is a piece of wire which extends down into a slot in the shelf

39 and is wound around a screw 44 to form a spring.

In order to remove the tube 37, the loop 43 is swung to the left, as shown dotted in Fig. 3, this permitting the tube to be drawn out of the hole in the part 11ª.

The receptacle 33 also has a bail 45 so that it may be easily carried when well filled.

The device can be easily applied to the rail 10 or removed therefrom, and as the support is movable along the rail, it can be readily positioned at the most convenient place for access to the tube 36.

I claim:

An attachment for bedsteads, comprising a support having means for attachment to one of the side rails of the bedstead, a receptacle carried by the support, a shelf on the support, a liquid conducting tube on the shelf and having a laterally extending outlet portion positioned to discharge into the receptacle, the support having an aperture through which the outlet portion passes, and a flexible liquid receiving tube connected to the aforesaid tube.

In testimony whereof I affix my signature.

CHARLES L. FRENCH.