United States Patent [19]

West

[11] **3,800,887**

[45] **Apr. 2, 1974**

[54] **DRIVE HEAD ASSEMBLY FOR AN EARTH DRILLING MACHINE**

[75] Inventor: **Harold H. West,** Seattle, Wash.

[73] Assignee: **The Robbins Company,** Seattle, Wash.

[22] Filed: **Feb. 7, 1972**

[21] Appl. No.: **223,838**

[52] **U.S. Cl.** **173/57,** 173/152, 173/163, 173/DIG. 3

[51] **Int. Cl.** **E21b 21/00,** E21b 3/02

[58] **Field of Search** 173/57, 152, 159, 164, 173/163, 170; 175/170, 85

[56] **References Cited**

UNITED STATES PATENTS

3,454,114	7/1969	Poage	173/152
3,695,364	10/1972	Porter et al.	173/164 X
3,490,546	1/1970	Hattrup et al.	173/163 X
3,554,298	1/1971	Klein	173/164

Primary Examiner—Ernest R. Purser
Assistant Examiner—William F. Pate, III
Attorney, Agent, or Firm—Graybeal, Barnard, Uhlir & Hughes

[57] **ABSTRACT**

An output shaft projects downwardly through an opening in a support frame. A crown gear at the lower end of such shaft mates with a complementary crown gear at the upper end of a drive head main body situated below the frame. A large bolt extends upwardly through an opening in an upper wall of such drive head main body. It includes a large diameter head which seats against an inner surface of such upper wall and a threaded stem portion which threads into a lower end portion of the shaft. A drive box is located inside of the drive head main body and is coupled thereto by means of splines in a manner permitting it to both float axially and swivel sideways.

21 Claims, 5 Drawing Figures

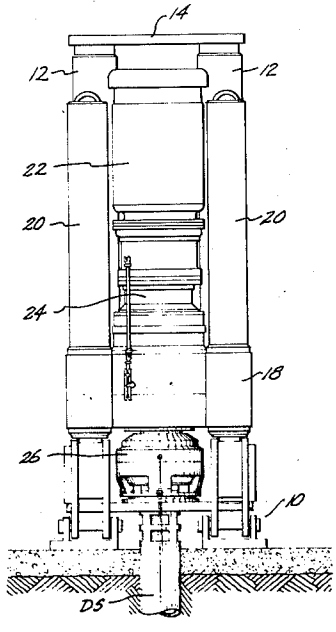

Fig. 1.

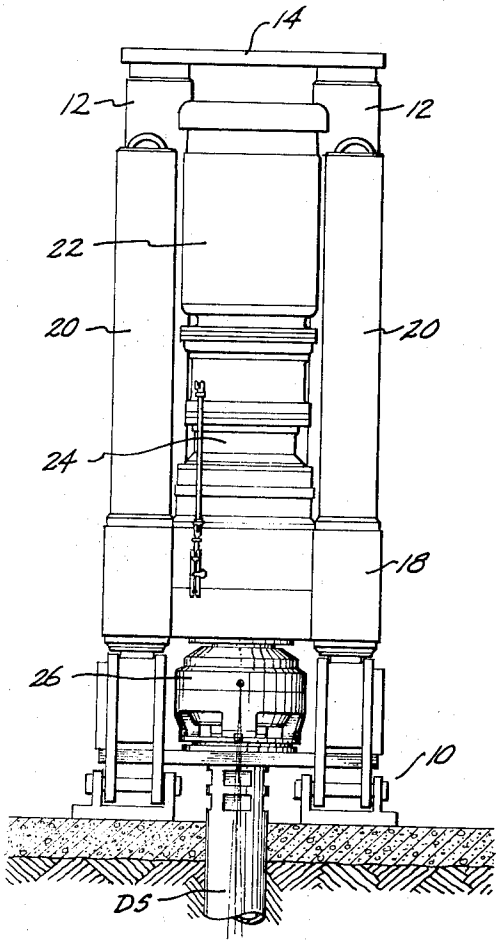

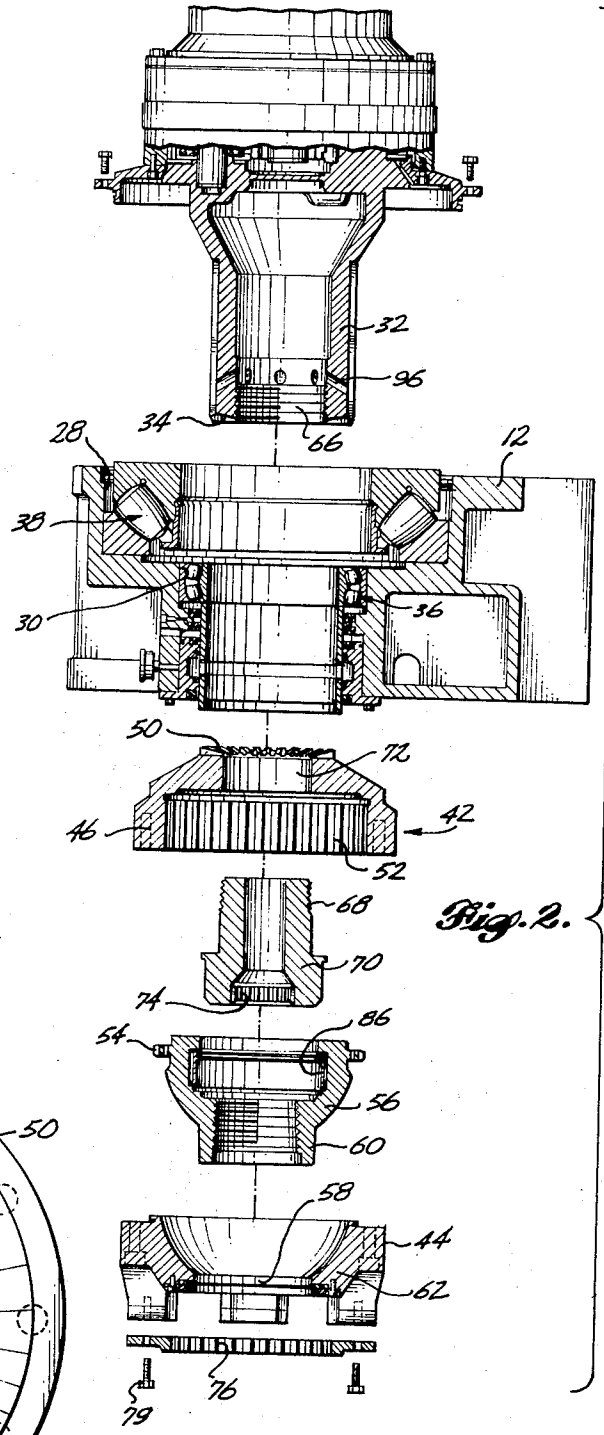

Fig. 2.

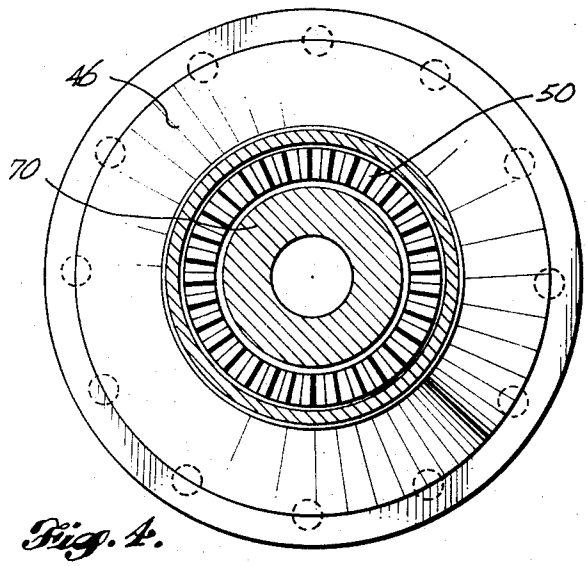

Fig. 4.

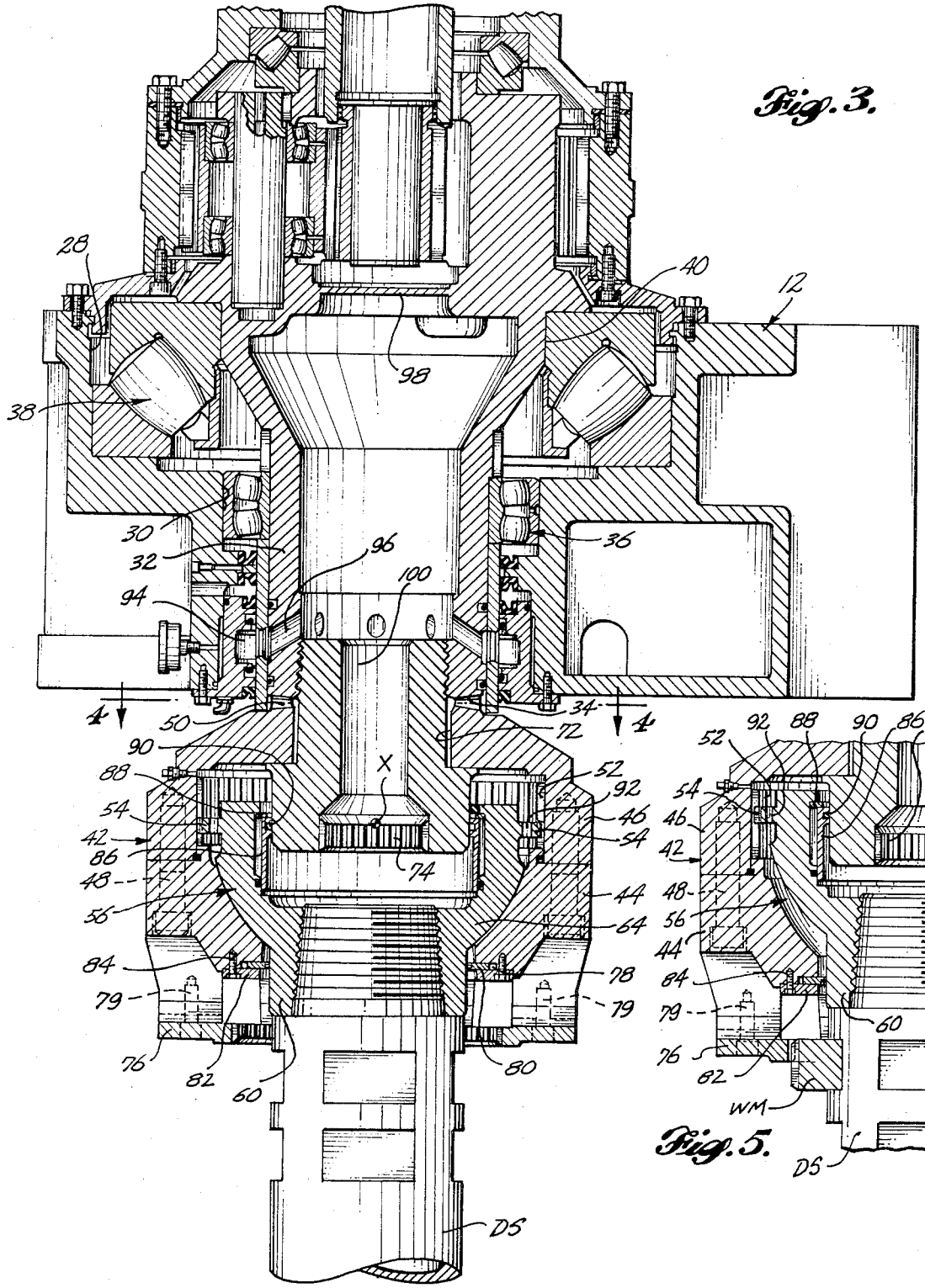
28
40
12
98
38
30
32
96
100
36
94
4
4
50
34
72
90
88
54
42
86
48
56
84
79
76
82
60
X
74
52
92
46
54
44
64
78
79
80
DS

Fig. 3.

52
92
88
90
86
74
54
46
42
48
56
44
84
79
76
82
60
WM
DS

Fig. 5.

DRIVE HEAD ASSEMBLY FOR AN EARTH DRILLING MACHINE

BACKGROUND OF THE INVENTION

1. Field of the Invention

This invention relates to earth drilling machines, and in particular to a novel drive head assembly for such a machine.

2. Description of the Prior Art

Earth drilling machines of the type to which this invention relates basically comprise a drive head which includes a tool joint component (viz. a drive box or a drive pin) for attachment to drill pipe. A drive motor, transmission gearing and the drive head are mounted on and are carried by a support frame. One or more hydraulic rams are used to move the support frame, to advance and retract the drilling equipment and any drill pipe coupled thereto. An example of a machine of this type is disclosed by U.S. Pat. No. 3,490,546, granted Jan. 20, 1970 to John S. Hattrup, Leland B. Poage and Harold T. Klein.

Earth drilling machines of this type must be capable of transmitting and withstanding relatively large torque and thrust forces. At the same time consideration must be given to minimizing the size and the number of the components used in the machine for the purpose of minimizing the overall dimension and weight of the machine. This is because the machines must be readily transformable, including sometimes through small dimension tunnels underground.

SUMMARY OF THE INVENTION

This invention relates to a manner of rotatably supporting the rotary drilling equipment on the traveling support frame, and of transmitting rotative drive from the transmission to the drive head, combining high order structural strength with simplicity of design.

According to the invention, the rotary drive transmission rests on and is supported by the traveling support frame. It includes an output shaft which extends at least part way through a central opening in the frame. A crown gear or the like is provided at the end of such output shaft. The drive head is located on the opposite axial side of such support frame from the transmission. It includes a main or outer body having a complementary crown gear or the like at its inboard end. The two crown gears are brought together into face-to-face engagement and a single, relatively large connector bolt is installed and tightened to draw the output shaft and the drive head together. Such bolt has an enlarged head which bears against an inner wall portion of such drive head body and a shaft which threads into a lower portion of the drive shaft. Driving torque is transmitted from the output shaft through the teeth of the mating crown gears to the drive head.

The support bearings for the output shaft and the other components of the transmission leading to the output shaft are isolated from moments caused by bending of the drill pipe. According to the invention this is done by constructing the drive head to comprise an outer main body which carries the drive head crown gear and a smaller inner body which carries the tool joint component used for connecting the drive head to the drill pipe. The inner body is connected to the outer body by axial splines arranged to transmit rotative torque while permitting the inner body to both float axially within and tilt or swivel sideways relative to the outer body.

This invention also relates to the constructional details of certain other key components in the rotative drive train, and to arrangement features of such components, all contributing to achievement of structural sufficiency in a simple manner.

These and other features, advantages and characteristics of the earth drilling equipment of this invention will be apparent from the following detailed description of a typical and therefore nonlimitive embodiment of the invention, and from the accompanying illustrations.

BRIEF DESCRIPTION OF THE DRAWING

In the drawing like element designations refer to like parts, and

FIG. **1** is a small scale front elevational view of a traveling drive head type drilling machine embodying the present invention;

FIG. **2** is an enlarged exploded sectional view of the drive head and fragmentary portions of the traveling support frame and the drive box carried thereby;

FIG. **3** is an assembled view, partially in elevation and partially in section, of the equipment shown by FIG. **2**, said view showing the floating drive box **56** seated downwardly on a spherical seat carried by the main body of the drive head;

FIG. **4** is a cross sectional view taken substantially along line **4—4** of FIG. **3**; and

FIG. **5** is a fragmentary view of a portion of the drive head, showing a wrench member installed on a drill stem and showing the drive box floated upwardly a sufficient amount to put the peripheral teeth of the wrench member into engagement with complementary teeth on a breakout wrench member carried by the drive head.

DESCRIPTION OF THE PREFERRED EMBODIMENT

Referring to FIG. **1**, the drilling machine is shown to comprise a base assembly **10** which is securable to the ground at the drilling site. A plurality of guide columns **12** extend vertically upwardly from the base assembly **10** and are connected together at their upper ends by means of a head frame **14.** A traveling support frame **18** is provided which includes guide sleeve means (not shown) surroundingly engaging the guide columns **12,** and serving to guide the frame **18** along the columns **12.** One or more linear hydraulic motors **20** are interconnected between the traveling frame **18** and the base assembly **10,** and are used for moving the frame **18** rectilinearly up-and-down along the guide columns **12.**

The traveling frame **18** carries the rotary drilling equipment, comprising a drive motor **22,** a gear box **24** and a rotary drive head **26.** During use, the traveling support frame **18** and the drilling equipment **22, 24, 26** carried thereby are forcibly moved up-and-down by the motors **20** while at the same time the drive head **26** is rotated and it in turn transmits rotative torque to a drill stem DS to which it is connected.

Referring to FIG. **2,** the traveling support frame **12** is shown to have a hollow three dimensional body which in the preferred embodiment is of one piece integral construction. It includes an upwardly directed main bearing receiving recess **28,** below which there is a second, smaller diameter, second bearing recess **30.**

The gear box 24 includes a tubular output shaft 32 having a set of crown gear teeth or the like 34 at its lower end. A relatively small diameter radial antifriction bearing 36 is received within the bearing cavity 30 and a larger diameter combination antifriction bearing 38 is received within the bearing recess 28. A first diameter portion of the shaft 32 extends through the bearing 36 and is rotatively coupled to the inner race thereof. A larger diameter upon portion 40 of the input shaft is received within the inner race of the larger bearing 38 and is rotatably coupled thereto. The outer races of the bearings 36, 38 are fixed relative to the frame 12.

According to the invention, the drive head 26 includes a generally bell-shaped outer or main body 42 which is of composite construction. It is composed of a lower portion 44 and an upper portion 46 connected together by means of a circular array of bolts 48. The upper end of the upper portion 46 includes a set of crown gear teeth 50 or the like which compliment the crown gear teeth 34 at the lower end of input shaft 32.

The inner wall of head member 46 includes a plurality of axial splines 52 for receiving in a mating fashion the shorter external splines 54 provided around the outer periphery of a floating inner body or collet member 56. As clearly shown by FIGS. 2 and 3, the collet member 56 fits into the inner cavity of the head member 46, the splines 54 meshing with the splines 52. The lower head member 44 includes a central opening 58 sized to loosely receive the small diameter lower end portion 60 of the collet 56. It also includes an annular wall portion 62 bordering the opening 58 and serving as a retainer for the larger diameter upper portion 64 of the collet member 56.

The gear box output shaft 32 is internally threaded at 66 (FIG. 2). These threads receive the externally threaded upper end portion 68 of a relatively large hollow bolt 70 which serves to secure the head member 47 to the input shaft 32.

During assembly, the shaft 32 is inserted vertically downwardly through the two bearings 38, 36, carried by the traveling cross frame 12. The upper head member 46 is then brought into position below the frame 12 and the end splines or gears 50 thereon are set into engagement with the end teeth or splines 34 on shaft 32. Next, the bolt 70 is inserted upwardly through the opening 72 in member 46 and is tightly threaded into the lower end portion of input shaft 32. A wrench socket 74 is formed in the lower head end of bolt 70. The end of a key or insert type wrench is inserted into this socket 74 and used for rotating the bolt 70. Next, the floating collet member 56 is inserted in place. Then, the lower head member 44 is installed and secured to the head member 46 by means of the bolts 48 (FIG. 3).

The drive head 26 includes a breakout wrench 76 shown as a separate member adapted to be secured to the lower end of member 44 by means of a plurality of bolts 79 and face keys (not shown).

Referring to FIG. 3, a seal cavity 78 is formed in the lower end portion of member 44. An annular ring type seal member 80 having an internal opening size to snugly receive the smaller diameter lower end portion 60 of collet member 64 is inserted over such lower end portion 60 and set into the recess 78. Then, an annular retainer ring 82 is placed below the seal ring 80 and is secured to member 44 by means of a plurality of set screws 84. Retainer member 82 and the lower end portion of head member 44 have inside diameters which are larger than the outside diameter of collet portion 60. The retainer ring 82 serves to hold the seal ring 80 in place, but it does not exert a holding pressure on the ring 80. In other words, the axial dimension of the cavity formed between the retainer ring 82 and the roof surface of the seal member cavity is larger than the thickness dimension of the seal member 80, so that the seal member 80 is free to "float" laterally within the recess 78. The outer diameter of seal member 80 is smaller than the diameter of the recess 78, so that such floating can occur. An annular upper seal member 86 is inserted downwardly into the upper end portion of collet member 46 and a snap-in retainer ring 88 is installed before collet member 46 is placed within the head member 46. This seal member 86 includes an annular seal ring portion 90 which snugly receives the cylindrical side wall portion of the bolt 70, and slides therealong during axial and tilting movement of the collet member 56.

The mating of the relatively short collet splines 54 with the longer drive head splines 52 is done with sufficient clearance both radially and circumferentially so that the collet member 56 can swivel or tilt about point X, in nearly any direction for a full 360° around the drive head 26. In the direction of tilt a tooth 54 on one side of the head swings downwardly and a tooth 54 on the opposite side swings upwardly. At right angles to the direction of tilt a pair of diametrically opposite teeth 54 must turn sideways an amount equal to the tilt angle. Sufficient clearance is provided in the mesh to permit these movements to happen. This "swiveling" or "tilting" arrangement prevents bending moments from being transferred from the drill pipe into the gear box or to the bearings 36, 38. Such avoidance of bending at the drive head also reduces fatigue stress in the drill pipe, substantially increasing the life of the total drill string.

The splines 52, 54 permit a limited amount of vertical "floating" of the collet member 56. This "floating" capability is utilized during drill stem makeup and breakout to accomodate for thread travel without axial movement of the drive head proper. It is also utilized advantageously to permit easy movement of the breakout wrench into or out from engagement with a collar type wrench member WM installed on the drill pipe (FIG. 5). Wrench member WM includes peripheral teeth which are engageable with the teeth of breakout wrench 76, as shown by FIG. 5. The upper and intermediate portions of the drive box 56 move within a space which is sealed by the two sliding seals 80, 90. Such space is larger than such intermediate and upper portions of member 56 so a chamber always exists within the main body 42 which is for the most part formed between the drive head bodies 42, 56. The splines 54 are located at the periphery of an annular flange which is a part of the inner body 56. Such flange has a mean plane which intersects the center of swivel X. This flange also divides the chamber into two variable volume parts, the respective volumes of which vary depending upon the axial position of member 56. A circular array of axial openings 92 are formed in the flange to provide passageways through which a suitable lubricant (e.g. a grease) can be transferred back-and-forth between the two portions of the chamber during axial movement of member 56. The seal face diameters (i.e.

the diameters where the seal members **80, 90** make sliding contact with members **60, 70** respectively), are made equal so that equal displacement occurs on each side of the flange during axial movement of member **56.** This arrangement eliminates any "pumping" effect during drive box float.

An annular drilling fluid manifold **94** is formed around a lower portion of the shaft **32.** As shown in FIG. **3,** suitable seals are provided outwardly of each axial boundary of the manifold **94.** A plurality of generally radial passageways **96** are formed through lower side wall portions of the shaft **32,** communicating the supply manifold **94** with the interior of the shaft **32.** A closure **98** is provided interiorily of shaft **32** for arresting upward travel of the drilling fluid. The connector bolt **70** is tubular in form and its open center **100** is a part of the drilling fluid passageway.

In the illustrated embodiment the inner member **64** includes a spherical (centered about point X) lower support surface of convex curvature which seats on a concave spherical seat. Member **64** may also be provided with an upper convex spherical surface and an upper concave seat. In the illustrated embodiment the upper end of member **64** is flat. During down drilling it is against a flat inner surface on member **46.** There mating flat surfaces offer some resistance to swiveling movement of member **56.** However, swiveling can occur if the causing force is great enough.

It is to be understood that the invention is not limited to the constructional details which are shown and described, but that various changes and modifications may be made without departing from the spirit and scope of the invention, and the invention is to be limited only in the appended claims.

What is claimed is:

1. A drilling machine comprising a traveling support frame mounted for rectilinear movement along a drill hole line, rotary drilling equipment carried by said frame including a rotary output shaft and a drive head driven thereby, and the improvement comprising:

said support frame including first and second axial boundaries and a passageway extending therethrough generally coaxial with the drill hole line,

said output shaft extending at least part way through said passageway, from said first axial boundary towards said second axial boundary, and terminating in a tubular, internally threaded end portion,

said drive head being disposed on the second axial boundary side of said frame,

said drive head including a tubular main body which is substantially larger than said passageway, said body including a driven end portion having an end wall with a central opening therein,

mating torque transmitting projections and recesses on the end portion of said output shaft and on the driven end portion of said drive head body, and

a connector bolt detachably connecting the drive head to said output shaft, said bolt having an enlarged head seated internally of said body against the end wall of the driven end portion of said drive head main body, and an externally threaded shaft which extends through the central opening in said end wall and is threaded into the tubular end portion of said output shaft.

2. A drilling machine according to claim **1,** including complementary crown gears forming the mating torque transmitting projections and recesses on said output shaft end portion and on the driven end portion of said drive head body.

3. A drilling machine according to claim **1,** wherein the connector bolt head includes an axial recess for receiving an insertion type of wrench member, usable for tightening and loosening the bolt for pulling the output shaft and the tubular main body of the drive head together into tight torque transmitting engagement with each other.

4. A drilling machine according to claim **1,** in which the connector bolt is tubular and its open interior is part of a drilling fluid passageway.

5. A drilling machine according to claim **1,** in which said traveling support frame is formed to include a bearing recess on the first axial boundary side thereof, coaxially surrounding the axial passageway through such frame, and a large main bearing is disclosed in said socket through which the output shaft extends, said bearing including a fixed race which is fixed relative to the support frame and a moving race rotatable with said output shaft.

6. A drilling machine according to claim **5,** in which said traveling support frame is formed to include a second smaller bearing recess axially inwardly of said first socket, and a second bearing is located therein through which the output shaft also extends, said second bearing including a fixed race which is fixed relative to said frame and a moving race which rotates with said output shaft.

7. A drilling machine according to claim **1,** in which the drive head includes an axially floating inner body carrying a tool joint component, and means coupling said drive head main body and said inner body together for joint rotation but permitting relative axial movement of such bodies.

8. A drilling machine according to claim **7,** wherein the drive head main body includes a circular pattern of internal axial splines and said floating inner body includes complementary external splines having spaces between them for receiving the splines of the drive head main body.

9. A drilling machine according to claim **8,** in which the fit between the two sets of splines is loose enough to provide sufficient clearance both radially and circumferentially to permit the tool joint component to be tilted a predetermined limited amount relative to the drive head main body.

10. A drilling machine according to claim **8,** wherein the external splines are at the periphery of a flange which has a mean plane that intersects the center of tilt.

11. A drilling machine according to claim **9,** in which said drive head inner body includes a spherical convex surface portion which is directed axially outwardly of the drive head, and said drive head main body portion includes an annular concave seat surface of complementary spherical configuration, for receiving the spherical convex surface during portions of a drilling operation.

12. A drilling machine according to claim **7,** in which said drive head inner body is tubular and includes an annular inner end portion which surrounds the head of said connector bolt, and an annular seal is located between said connector bolt head and the annular inner end portion of said inner body.

13. A drilling machine according to claim **11,** in which said annular seal is carried by said inner body

and makes sliding sealing contact with the bolt head during relative axial movement between the two drive head bodies.

14. A drilling machine according to claim **12,** in which the connector bolt is tubular and its open interior is part of a drilling fluid passageway.

15. Drilling apparatus comprising:

a rotary drive head comprising an inner body, an outer main body surrounding said inner body, and spline means coupling said inner and outer bodies together for joint rotation but permitting relative axial movement of such portions, a support frame for said drive head and means for moving said support frame axially during the drilling operation, means mounting the outer main body of the drive head in fixed position relative to said support frame, said inner drill head body comprising an outboard end portion which includes a threaded tool joint component and an integral inboard tubular portion, said spline means comprising exterior splines on the inboard tubular portion of said inner drill head body and complementary splines on said outer drill head main body having spaces between them for receiving the splines of the inner body, with the fit between the splines on the inner drill head body and the splines on the outer drill head main body providing enough clearance both radially and circumferentially so that the splines on the inner portion can tilt relative to the splines on the outer portion, during deflection of drill pipe connected to said inner portion, an amount sufficient to allow the said inner portion to pivot relative to the outer portion an amount sufficient to render the spline connection incapable of transferring bending moments.

16. Drilling apparatus according to claim **14,** in which said inner drive head body includes a spherical convex surface which is directed axially outwardly of the drill head, and said drill head main body includes an annular concave seat surface of complementary spherical configuration, and during a portion of the drilling operation said spherical surfaces are together upon tilting of the inner body and the convex spherical surface slides on the concave spherical seat surface.

17. A rotary drive head for a drilling machine comprising a tubular outer main body forming an inner space, means for rotating said main body including an output shaft to which said outer main body is secured, a drilling fluid passageway in said output shaft leading into said outer main body, said passageway being defined in part by an annular member which is situated within said inner space, an inner body within said inner space including threads for engaging complementary threads on a piece of drill pipe, and spline means mounting said inner body for joint rotation with the outer body but permitting it to float axially within said inner space relative to the outer body during movement of drill pipe connected to the inner body axially relative to said outer body, said spline means also permitting the inner body to pivot sideways relative to the outer body in essentially any direction an amount sufficient to render said means incapable of transferring bending movements from said inner body to said outer body during deflection of drill pipe connected to said inner body.

18. The structure of claim **17,** in which the means coupling the two bodies together for joint rotation and limited relative axial movement comprises a circular array of axially elongated internal splines carried by the main body and a complementary set of shorter axial splines carried by the inner body.

19. The structure of claim **17,** further including a first sliding seal is provided between an inner end portion of said inner body and the periphery of said annular member, and a second sliding seal between an outer end portion of the main body and outer end portion of the inner body, with a chamber being formed by and between said inner and outer bodies which is sealed at its ends by said first and second seals.

20. The structure of claim **18,** in which the splines of the inner body are located at the outer periphery of an annular flange on said inner body, said flange having a plurality of axial openings therein, with a first portion of said chamber being located axially on one side flange and a second portion being located axially on the opposite side of said flange, and said chamber containing a lubricant which is transferred through said openings back-and-forth between said chamber portions during axial movement of the inner body.

21. The structure of claim **19,** in which the seal face diameters for the two sliding lubricant seals are equal, so that volume displacement is equal in the two chamber portions.

* * * * *

UNITED STATES PATENT OFFICE

CERTIFICATE OF CORRECTION

Patent No. 3,800,887 Dated April 2, 1974

Inventor(s) Harold H. West

It is certified that error appears in the above-identified patent and that said Letters Patent are hereby corrected as shown below:

FIG. 2, change numeral "12" to -- 18 -- .
FIG. 3, change numeral "12" to -- 18 -- .

Column 1, line 30, change "transformable" to -- transportable -- .
Column 2, line 62, change numeral "12" to -- 18 -- .
Column 3, line 12, change numeral "12" to -- 18 -- .
Column 3, line 42, change numeral "12" to -- 18 -- .
Column 3, line 43, change numeral "12" to -- 18 -- .
Column 3, line 62, change "size" to -- sized -- .
Column 6, line 15, before "bearing" insert -- first -- .
Column 6, line 17, change "disclosed" to -- disposed -- .
Column 6, line 18, change "socket" to -- first bearing recess -- .
Column 6, line 25, change "socket" to -- bearing recess --.
Column 6, line 58, after "surface" insert -- portion -- .
Column 7, line 12, change "portions" to -- bodies -- .
Column 7, line 29, change "portion" to -- body -- .
Column 7, line 30, change "portion" to -- body -- .
Column 7, line 31, change "portion" to -- body -- .
Column 7, line 32, change "portion" to -- body -- .
Column 7, line 33, change "portion" to -- body -- .
Column 7, line 37, delete "inner".
Column 7, line 37, change "head" to -- head's inner -- .
Column 7, line 39, change "drill" to -- drive -- .
Column 8, line 26, delete "is".
Column 8, line 33, change numeral "18" to -- 19 -- .
Column 8, line 37, after "side" insert -- of said -- .
Column 8, line 41, delete "portions".
Column 8, line 41, before "chamber" insert -- first portion and said second portion of said -- .
Column 8, line 43, change numeral "19" to -- 20 -- .
Column 8, lines 45/46, change "two chambers" to -- first

USCOMM-DC 60376-P69
* U.S. GOVERNMENT PRINTING OFFICE : 1969 O—366-334.

UNITED STATES PATENT OFFICE
CERTIFICATE OF CORRECTION

Patent No. 3,800,887 Dated April 2, 1974

Inventor(s) Harold H. West Page - 2

It is certified that error appears in the above-identified patent and that said Letters Patent are hereby corrected as shown below:

continued from page 1:

and second -- .

Column 8, line 46, after "portions" add -- of said chamber -- .

Signed and sealed this 21st day of January 1975.

(SEAL)
Attest:

McCOY M. GIBSON JR.
Attesting Officer

C. MARSHALL DANN
Commissioner of Patents

FORM PO-1050 (10-69)

USCOMM-DC 60376-P69
★ U.S. GOVERNMENT PRINTING OFFICE : 1969 O—366-334.