D23-224 EX
D7463 OR D 30,026

DESIGN.

No. 30,026. Patented Jan. 17, 1899.

DE WANE B. SMITH.

SPRAYER BODY.

(Application filed Dec. 24, 1898.)

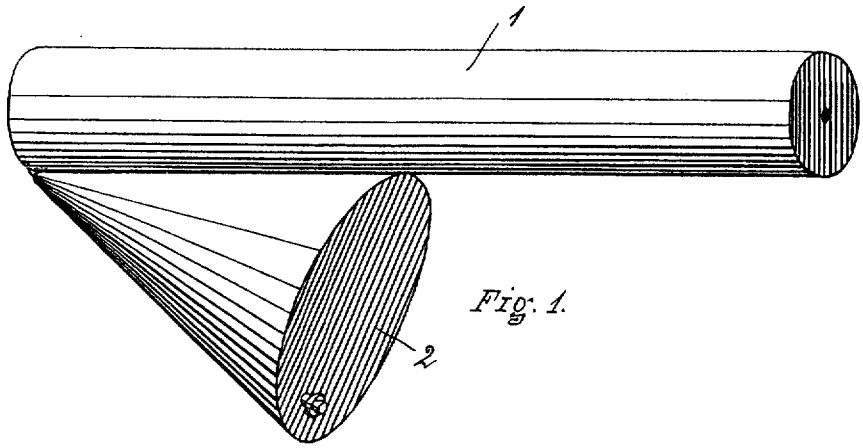

Fig. 1.

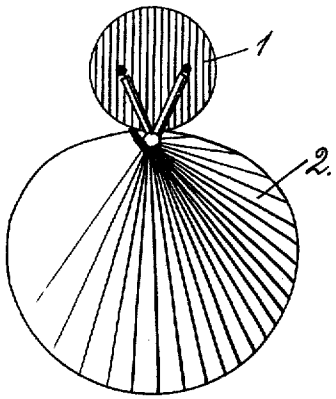

Fig. 2.

WITNESSES
Rich. A. George
Dwight H. Colegrove

INVENTOR
DE WANE B. SMITH
By Milton E. Robinson
ATTORNEY.

THE NORRIS PETERS CO., PHOTO-LITHO., WASHINGTON, D. C.

UNITED STATES PATENT OFFICE.

DE WANE B. SMITH, OF DEERFIELD, NEW YORK.

DESIGN FOR A SPRAYER-BODY.

SPECIFICATION forming part of Design No. 30,026, dated January 17, 1899.

Application filed December 24, 1898. Serial No. 700,294. Term of patent 7 years.

To all whom it may concern:

Be it known that I, DE WANE B. SMITH, a citizen of the United States, residing at Deerfield, in the county of Oneida and State of New York, have invented and produced a new and original Design for Sprayer-Bodies, of which the following is a specification, reference being had to the accompanying drawings, forming a part thereof.

Figure 1 is a perspective view of a sprayer-body of my design. Fig. 2 is an end view of the same.

The feature of the design is the form and shape of the sprayer-body and arrangements of parts constituting the same, as follows: the cylindrical portion 1 and the enlarged conical portion 2, arranged beneath one end of the part 1 and having its apex portion substantially at one end of the cylindrical portion, substantially as shown.

Having described my invention, what I claim as new, and desire to secure by Letters Patent, is—

The design for a sprayer-body substantially as herein shown and described.

In witness whereof I have hereunto set my hand, in the presence of two witnesses, this 21st day of December, 1898.

DE WANE B. SMITH.

Witnesses:

M. H. SMITH,

E. WILLARD JONES.