Dec. 4, 1962 L. S. ALBIGESE 3,066,318

DENTAL DEVICE

Filed Dec. 13, 1960

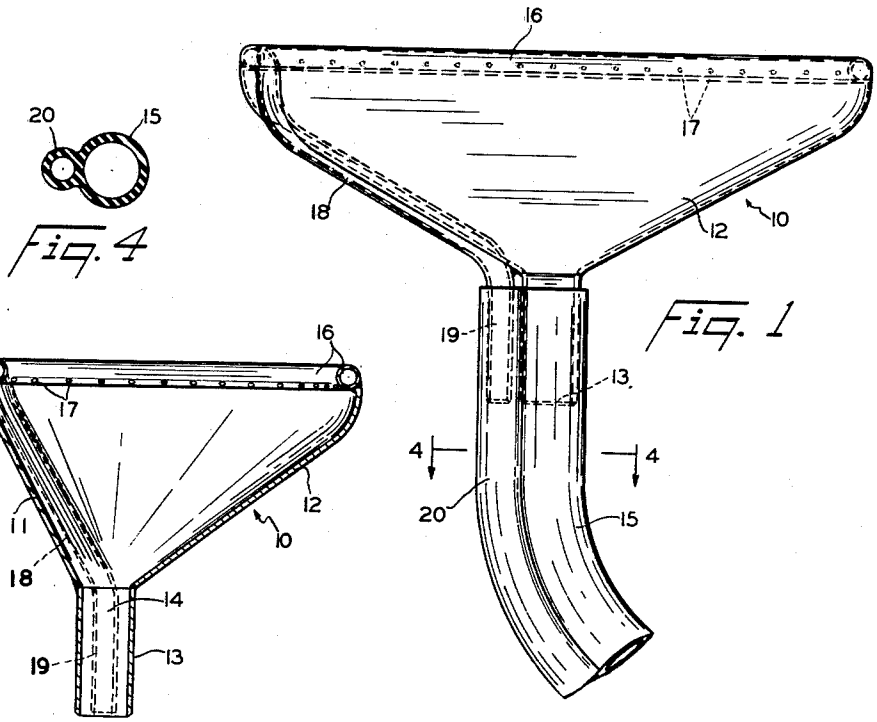

Fig. 1

Fig. 4

Fig. 2

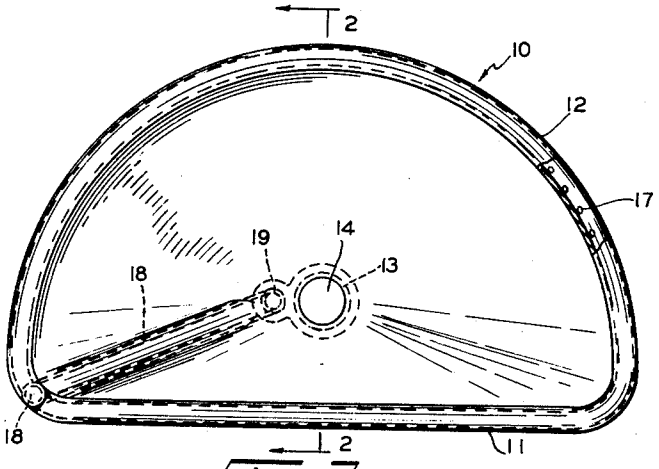

Fig. 3

INVENTOR.
LOUIS S. ALBIGESE
BY Richard von K. Bruns
Atty.

United States Patent Office

3,066,318

Patented Dec. 4, 1962

3,066,318

DENTAL DEVICE

Louis S. Albigese, 15 Shaw St., Utica, N.Y.

Filed Dec. 13, 1960, Ser. No. 75,614

2 Claims. (Cl. 4—263)

This invention relates generally to dental operatory equipment and more specifically to a hand-held cuspidor having suction drain means for use by dental patients.

In modern dentistry, all operations such as cleaning the teeth and drilling and filling teeth are accompanied by waste materials which are left in the mouth of the patient. The dentifrice used in cleaning, the chips from the drilling, and the excess of the material which is used to fill cavities, as well as the saliva which often accumulates when the mouth is held open for long periods, all must be ejected by the patient at frequent intervals by spitting.

Heretofore, it has been the practice to provide a cuspidor at the side of the dental chair, with constantly running water to carry away the waste material and debris ejected by the patient. To reach this cuspidor the patient must sit up in the chair, lean to the side and then assume a semi-reclining position again. During this time the dentist is idle and must wait for the patient.

The principal object of the present invention, therefore, is to reduce this waste time to the minimum by providing a small and light receptacle which may be held in the patient's hand and used by him as necessary with a minimum shifting of position.

Further objects are to provide suction means for removing the mouth debris and waste spit out by the patient and to provide a continuous flow of water to carry away offensive matter but which water will not ordinarily spill out of the receptacle.

Other objects and advantages will become apparent from the following description taken in conjunction with the accompanying drawing, in which:

FIGURE 1 is a front elevational view of the receptacle of the present invention with hose attached;

FIGURE 2 is a sectional view of the receptacle taken substantially along line 2—2 of FIGURE 3;

FIGURE 3 is a top plan view of the receptacle, a small portion being shown in section; and

FIGURE 4 is a sectional view of the hose on the line 4—4 of FIGURE 1.

In the drawing, the receptacle **10** is shown as a generally cup-shaped body, preferably of stainless steel, and being generally semicircular in plan. One substantially flat side wall **11** is provided so that the receptacle may be conveniently held with that side in contact with the chin. The remainder of the side wall **12**, as well as side wall **11**, is smoothly curved and convergently sloped downwardly and inwardly to end in a pendant nipple **13** and provide a drain hole **14** at the bottom. A suction house **15** is connected in the usual manner to the nipple **13**, the other end of the hose being connected to a suitable source of vacuum.

A water supply tube **16** is provided on the inside of the rim of the receptacle at the top. Tube **16** is likewise of stainless steel and is welded to the top rim of the receptacle so that the side walls of the receptacle merge with the tube tangentially and smoothly. Tube **16** encircles the rim completely and provides a smoothly

rounded lip for the receptacle. Spray holes **17** are provided at spaced intervals as shown in the bottom of the tube **16** and are placed so as to face slightly away from the side walls **11** and **12**.

At one end of the receptacle a connecting tube **18** is joined to the supply tube **16**, and the tube **18** extends through the side wall **12** and along the outside of the wall ending in a second pendant nipple **19** parallel to and spaced from the nipple **13**. Tube **18** is preferably partially sunk in a groove formed in the side wall and welded to the side wall so as to be smoothly joined thereto, leaving no sharp projections or hard-to-get-at corners.

A second, smaller rubber hose **20** is connected in the usual manner to the nipple **19**, the other end of the hose being connected to any convenient water supply source. The hoses **15** and **20** are preferably joined together or integral, as shown, being of the new "Siamese twin" type now commercially available.

In use, the receptacle **10** may be held in the hand of the patient with the flat side wall against the chin, the only movement on the part of the patient that is necessary being to raise or incline his head slightly to spit if the character of the work being done necessitates a semi-reclining position or a position in which the chin is elevated. Water flows continuously through the tube **16** and sprays out from the holes **17** in continuous jets directed slightly away from the walls **11** and **12** and toward the drain hole **14**. The continuous suction through the hose **15** carries the water away and any mouth debris or waste material with it.

The jets of water form a continuously flowing flushing fountain and, being directed slightly away from the side walls, eliminate any splashing. The suction prevents any spilling unless the receptacle is tilted through the major part of ninety degrees.

The flexible hoses permit ready movement of the receptacle and the double nipple (**13**, **19**) — double hose (**15**, **20**) connection is easily and quickly made and broken for removing the receptacle for cleaning.

The welded construction provides well filletted junctions between tubes **16** and **18** and the side walls. Furthermore, the rounded construction of the whole receptacle without any sharp projections or reentrant angels or pockets make it easy to clean and safe to use.

As will be apparent to those familiar with the art, the invention can be embodied in other specific forms without departing from the spirit or the essential characteristics thereof. The embodiment disclosed is therefore to be considered in all respects as illustrative rather than restrictive, the scope of the invention being indicated by the appended claims.

What is claimed is:

1. A portable cuspidor for dental patients comprising a light weight generally cup shaped receptacle adapted to be held in the hand and having one flat side adapted for engagement against the patient's chin, a drain hole at the bottom of said receptacle, a pendant nipple connected to said drain hole, a small water supply tube encircling the inside of and merging smoothly with the rim of said receptacle, downwardly opening spray holes at spaced intervals along said tube, said holes being directed toward said drain hole, a second nipple connected to said tube, and conduit means including flexible hoses respectively connecting said drain hole nipple to a vacuum

source and said tube nipple to a source of water under pressure, whereby said receptacle may be inverted without any substantial spilling of said water.

2. A portable cuspidor for dental patients comprising a generally cup-shaped receptacle adapted to be held in the hand and having a drain hole at the bottom, a pendant nipple connected to said drain hole, a flexible suction hose connecting said nipple to a vacuum source, a water supply tube encircling the inside of the rim of said receptacle, downwardly opening spray holes at spaced intervals along said tube, a second nipple connected to said tube, and a second hose connecting said second nipple to a source of water under pressure, said spray holes being within the receptacle and directed toward said drain hole, whereby water ejected from said spray holes is collected and removed from said receptacle by the lowered pressure in said suction hose regardless of the position in which said receptacle is held.

References Cited in the file of this patent

UNITED STATES PATENTS

595,532	Doyle	Dec. 14, 1897
1,253,555	Wolf	Jan. 15, 1918
1,587,240	Olson	June 1, 1926
1,826,137	Kushner	Oct. 6, 1931
2,527,270	Levin	Oct. 24, 1950
2,631,299	Freedman	Mar. 17, 1953