(19) Europäisches Patentamt
European Patent Office
Office européen des brevets

(11) Publication number : **0 372 601 B1**

(12) EUROPEAN PATENT SPECIFICATION

(45) Date of publication of patent specification : **22.02.95 Bulletin 95/08**

(51) Int. Cl.[6] : **H04B 1/66**

(21) Application number : **89202823.4**

(22) Date of filing : **08.11.89**

(54) Coder for incorporating extra information in a digital audio signal having a predetermined format, decoder for extracting such extra information from a digital signal, device for recording a digital signal on a record carrier, comprising such a coder, and record carrier obtained by means of such a device.

(30) Priority : **10.11.88 NL 8802769**
25.04.89 NL 8901032

(43) Date of publication of application :
13.06.90 Bulletin 90/24

(45) Publication of the grant of the patent :
22.02.95 Bulletin 95/08

(84) Designated Contracting States :
AT BE DE ES FR GB IT SE

(56) References cited :
EP-A- 0 145 332
EP-A- 0 289 080

(73) Proprietor : **Philips Electronics N.V.**
Groenewoudseweg 1
NL-5621 BA Eindhoven (NL)

(72) Inventor : **Druyvesteyn, Willem Frederik**
c/o INT. OCTROOIBUREAU B.V.
Prof. Holstlaan 6
NL-5656 AA Eindhoven (NL)
Inventor : **Hoogendoorn, Abraham**
c/o INT. OCTROOIBUREAU B.V.
Prof. Holstlaan 6
NL-5656 AA Eindhoven (NL)
Inventor : **Van de Kerkhof, Leon Maria**
c/o INT. OCTROOIBUREAU B.V.
Prof. Holstlaan 6
NL-5656 AA Eindhoven (NL)
Inventor : **Veldhuis, Raymond Nicolaas Johan**
c/o INT. OCTROOIBUREAU B.V.
Prof. Holstlaan 6
NL-5656 AA Eindhoven (NL)

(74) Representative : **van der Kruk, Willem**
Leonardus et al
INTERNATIONAAL OCTROOIBUREAU B.V.,
Prof. Holstlaan 6
NL-5656 AA Eindhoven (NL)

EP 0 372 601 B1

Note : Within nine months from the publication of the mention of the grant of the European patent, any person may give notice to the European Patent Office of opposition to the European patent granted. Notice of opposition shall be filed in a written reasoned statement. It shall not be deemed to have been filed until the opposition fee has been paid (Art. 99(1) European patent convention).

Description

The invention relates to a coder for incorporating extra information in the form of an auxiliary signal in a digital audio signal having a predetermined format, to a decoder for extracting this extra information from digital signal, to a device for recording a digital signal on a record carrier and to a record carrier obtained by means of such a device.

In digital sound transmission and recording systems, such as CD players, future television systems, such as D2MAC, and so on, the format, i.e. the sampling rate and the number of bits per sample, in which the digital sound signal is recorded or transmitted, is generally predetermined, for example, in connection with international agreements. Sometimes, however, there is a need for recording or transmitting more information than possible on the basis of the available number of channels. For example, on the basis of international agreements, not more than two high-quality digital audio channels, for example, each channel for 14-bit digital signals, can be available in specific future television systems. These channels are used for transmitting audio information for the respective left and right-hand channels. However, there is a wish to transmit information for rear channels too, for example, a left-hand and a right-hand rear channel for so-called surround sound. Also in other cases it may be very useful if extra information can be added to existing channels for digital signals having a predetermined format, without the need for extending the number of channels for this purpose. In this context one may think of adding music signals containing music information without vocals, which is commonly referred to as Karaoke, so that the user himself can provide the vocals; or adding music signals in which a specific instrument is omitted, so that the user can play this instrument along with the rest of the recording. One may also think of adding extra information by way of data signals, such as, for example, for Ceefax information.

It will be evident that in all these cases the system is desired to be compatible with state of the art systems, that is to say, it should be possible to reproduce the original signal information in an undisturbed manner with equipment not comprising a specific decoder for extracting the extra information from the signal. If, for example, there is a television signal containing surround-sound information, in a television set not equipped for producing surround sound, it should be possible to reproduce the information for the left and right-hand channels without this reproduction being disturbed in any audible way by the "masked" information for extracting the signal from the rear channels.

It is an object of the invention to provide a system presenting this feature and it thereto provides a system of the above type wherein the coder comprises means for analysing the digital signal, means for quantizing the analysed digital signal in an unequivocal manner and means for determining, on the basis of the acoustic properties of the human auditory system, the amount of extra information that can be added to the quantized digital signal without this extra information being audible with unmodified detection; means for combining the extra information and the quantized digital signal to a compound signal. The coder may further comprise means for reconverting the compound signal into a digital signal having the predetermined format.

According to a preferred embodiment of the invention the psychoacoustic property of the human auditory system is exploited that when the audio frequency band is divided into a number of sub-bands, whose bandwidths approximately correspond with the bandwidths of the critical bands of the human auditory system, the quantizing noise in such a subband is optimally masked by the signals of this subband.

It should be noted in this respect that a coder for generating subband signals is known from EP-A-0 289 080.

In an embodiment in which this masking principle is implemented the means for analysing the digital signal comprise analysis filter means for generating a number of P sub-band signals in response to the digital signal, which analysis filter means divide the frequency band of the digital signal into consecutive sub-bands having band numbers p ($1 \leqq p \leqq P$) according to a filter method with sample frequency reduction, while the bandwidths of the sub-bands preferably approximately correspond to the critical bandwidths of the human auditory system in the respective frequency ranges although it is likewise possible to use a smaller number of sub-bands, whereas, if the auxiliary signal is a digital audio signal, analysis filter means are preferably also provided for generating a number of P sub-band signals in response to the auxiliary signal, which analysis filter means divide the frequency band of the auxiliary signal into consecutive sub-bands with band numbers p($1 \leqq p \leqq P$), according to a filter method with sample frequency reduction, while the bandwidths of the sub-bands again preferably approximately correspond with the critical bandwidths of the human auditory system in the respective frequency ranges, whereas for each of the respective sub-bands means are provided for quantizing the digital signal in an unequivocal manner and means for combining the respective quantized subband signals and the corresponding sub-band signals. Preferably, the coder further comprises the auxiliary signal for constituting P compound sub-band signals, and synthesis filter means for constructing a replica of the compound signal in response to the compound sub-band signals, which synthesis filter means combine the subbands according to a filter

method with sample frequency enhancement corresponding to the sub-division in the analysis filter means.

For extracting the auxiliary signal incorporated in such a compound signal there are provided a decoder, comprising analysis filter means for generating a number of compound sub-band signals in response to the compound signal, these analysis filter means subdividing the frequency band of the compound signal into consecutive sub-bands having band numbers p ($1 \leqq p \leqq P$) according to a filter method with sample frequency reduction, the bandwidths of the subbands corresponding with those of the analysis filter means in the transmitter; means for quantizing in an unequivocal way the compound subband signals; means for subtracting the respective quantized subband signals from the corresponding sub-band signals of the compound signal in order to form sub-band difference signals, and synthesis filter means for constructing a replica of the auxiliary signal in response to subband difference signals, which synthesis filter means combine the subbands according to a filter method with sample frequency enhancement corresponding with the sub-division in the analysis filter means. The analysis filter means and the synthesis filter means together constitute a perfect reconstruction filter both in the coder and the decoder.

Although the invention can be applied to recording digital information on, for example, a compact disc or a video tape, as well as reproducing same, and also applied to transmitting and receiving digital information as is done in, for example, television, transmission and reception will be mentioned in the sequel for brevity, whereas recording and subsequent reproduction are also implicitly referred to.

The invention is based on the recognition of the fact that quantizing the digital audio signal in a predetermined manner enables to mask in resultant quantizing noise extra information in the form of an auxiliary signal, in the form of a discrete time signal, generally a digital signal, or in the form of a data signal, and that this re-quantized digital audio signal with the incorporated auxiliary signal can subsequently be reconverted into a compound digital signal again having the predetermined format, while when receiving this compound digital signal in a receiver that does not comprise a specific decoder, the audio information incorporated in the original digital audio signal can be extracted from this compound signal in the customary fashion, without the auxiliary signal affecting this signal to an audible level because this auxiliary signal lies below the masking threshold of the audio signal and remains masked in the quantizing noise. In a receiver that does comprise a decoder, however, the information relating to the auxiliary signal can be derived from the difference between the compound digital signal and the compound digital signal quantized in the predetermined manner.

The recognition on which the invention is based enables in a relatively simple manner to add extra information, in the form of an auxiliary signal, to an existing digital audio signal having a fixed format, to be called the main signal hereinafter and, subsequently, extract same again, without affecting to an audible extent the original information, whereas this original information can be reproduced even without any modification of the receiving equipment.

The recognition underlying this invention can only be applied if a number of requirements are fulfilled, which are the following:

1) The quantization method for the main signal is to be selected such that the quantization methods implemented both during transmission and reception is always the same;

2) The amplitude of the auxiliary signal to be added is to be smaller than half the quantization step of the main signal; and

3) The quantization of the main signal is to be performed such that the quantization noise is not audibly enhanced.

Condition 1) can be fulfilled in a simple manner when a choice is made in favour of a fixed quantization step, whose size is thus independent of the amplitude of the main signal. When quantization is effected both at the transmit end and the receive end the quantization step is fixed and no problems will occur. In practice, however, an adaptive quantization step is preferably used because it will then be possible to realise a maximum amplitude range for the auxiliary signal. With such an adaptive quantization special measures are to be taken so as to decide always unequivocally on the same quantization during transmission and reception, both at the transmit end and at the receive end, irrespective of the signal amplitude of the main signal.

According to a preferred embodiment of the invention the magnitude of the quantization step per sub-band depends on the amplitude of the main signal, whilst there is an exponential relationship with a predetermined basic number between any consecutive steps. Thus it is possible to obtain adaptive quantization which accommodates itself to the amplitude of the main signal and can be derived in an unequivocal manner from the compound signal at the receive end, so as to reclaim thus the main signal. This matter will be further explained hereinbelow.

The above condition 2) can be fulfilled by attenuating by a specific factor the auxiliary signal per subband at the transmit end and amplifying this signal again by the same factor at the receive end, whilst the magnitude of this factor can be selected in dependence on the magnitude of the quantization step used for quantizing the main signal. If the auxiliary signal is a data signal, no attenuation is required because in that case it can be determined for each quantized sample of the main signal how many bits form a half

quantization step and, consequently, how many data per sample can be added.

Condition 3) can basically be fulfilled by choosing the quantization steps small enough so that the quantization noise can be maintained at a very low level. However, this will lead to a conflict with condition 2). For, if a small quantization step is concerned, the amplitude available to the auxiliary signal, which amplitude, for that matter, should be smaller than this half quantization step, is also very small, which will lead to problems in connection with noise and reproducibility of the auxiliary signal. Therefore, a rather coarse quantization of the main signal is preferably used in combination with measures to make the resultant quantization noise inaudible to the human auditory system. Such measures are known per se.

A first measure is based on the phenomenon that when the audio signal band is divided into a plurality of sub-bands, whose bandwidths approximately correspond with the bandwidths of the critical bands of the human auditory system in the respective frequency ranges, it may be expected on grounds of psychoacoustic experiments that the quantization noise in such a sub-band will be optimally masked by the signals in this sub-band when the noise masking curve of the human auditory system is taken into account when the quantization is effected. This curve indicates the threshold value for masking noise in a critical band by a single tone in the middle of the critical band. If a high-quality digital music signal, represented, for example, in accordance with the compact disc standard, by 16 bits per signal sample with a sampling rate of 1/T = 44.1 kHz, it turns out that the use of this prior-art sub-band encoding with a suitably chosen bandwidth and a suitably chosen quantization for the respective sub-bands results in quantized transmitter output signals which can be represented by an average number of approximately 2.5 bits per signal sample, whilst the quality of the replica of the music signal does not perceptually differ from that of the original music signal in virtually all passages of virtually all sorts of music signals. For a further explanation of this phenomenon reference is made to the article entitled "THE CRITICAL BAND CODER -- DIGITAL ENCODING OF SPEECH SIGNALS BASED ON THE PERCEPTUAL REQUIREMENTS OF THE AUDITORY SYSTEM" by M.E. Krasner in proceedings IEEE ICASSP 80, Vol. 1, pp. 327-331, April 9-11, 1980. By implementing this so-called simultaneous masking in frequency sub-bands the main signal can yet be quantized with a minimum loss of quality despite a coarse quantization, as a result of which the maximum quantization range for the auxiliary signal, that is to say, the range smaller than a half quantization step, is relatively large, so that this signal too can be reconstructed with a minimum loss of quality.

A further measure known per se utilizes the psycho acoustic effect of temporal masking, that is to say, the property of the human auditory system that the threshold value for perceiving signals shortly before and shortly after the occurrence of another signal having a relatively high signal energy appears to be temporarily higher than during the absence of the latter signal. In the period of time before and after such a signal having a high signal energy, extra information of the auxiliary signal can now be recorded. It is also possible to combine temporal masking with frequency sub-band masking. A first possibility in this respect according to the invention is the implementation of the knowledge about the amplitude of one or more preceding digital signal samples. If there is a decreasing amplitude the quantization step can, in the case of adaptive quantization, be chosen to be larger than would be permissible on the basis of the actual signal amplitude and the selected quantization criterion, because the resultant extra quantization noise at this relatively low amplitude is masked by the preceding larger amplitude(s). Since a coarser quantization can be chosen, more extra information can be masked in the digital signal samples following a large signal amplitude, which favourably affects the signal-to-noise ratio when the auxiliary signal is received. A great advantage of this manner of temporal masking is the fact that no additional delay occurs when the samples are taken in which it is permitted to quantize more coarsely on the basis of temporal masking.

A further possibility is storing the samples of the main signal in blocks and deciding to come to a single quantization step which holds for all samples in that block on the basis of the maximum signal amplitude in that block, whilst assuming that owing to temporal masking the actually too coarse quantization of the samples having a lower sample amplitude is inaudible. However, a block signal sample is invariably to be stored before a quantization step can be determined.

A special use of the coder is in a device for recording a digital signal on a record carrier, for example a magnetic record carrier. The auxiliary signal which is then also recorded may now serve as a copy inhibit code. Said device will be used by the software industry to generate prerecorded record carriers provided with a copy-inhibit code. When such record carriers are played the analog signal obtained after D/A conversion still contains the auxiliary signal which, however, as stated above, is not audible. Every subsequent recording via said analog path, can now be inhibited if a recording device intended for the consumer market comprises a detection unit which is capable of detecting said auxiliary signal.

Such a device for recording a digital audio signal on record carrier comprising a coder for sub-band coding of the digital audio signal of given sample frequency 1/T, the coder comprising: analysis filter means responsive to the audio signal to generate a plurality of P sub-band signals, which analysis filter

means divide the frequencyband of the audio signal in accordance with a filter method with sample frequency reduction into consecutive sub-bands having band numbers p($1 \leqq p \leqq P$), which analysis filter means are further adapted to apply the P sub-band signals to P outputs, which outputs are coupled to P corresponding inputs of a

- recording unit which is constructed to record the P sub-band signals on the record carrier,

is therefor characterized in that the device further comprises a detection unit coupled to the analysis filter means, in that the detection unit is adapted to detect the presence of an auxiliary signal in one or more sub-band signals and to generate a control signal upon detection of the auxiliary signal and to apply the control signal to an output, in that said output is coupled to a control signal input of the recording unit, and in that the recording unit is adapted to inhibit recording of the audio signal in the presence of the control signal and to record the audio signal in the absence of the control signal. When the auxiliary signal is detected recording is inhibited, or the signal to be recorded is distorted on purpose before it is recorded. It is obvious that reproducing devices should comprise a decoder with which during reproduction the digital audio signal is read together with the auxiliary signal, without the two signals being separated from one another. During a subsequent recording the auxiliary signal in the audio signal can then be detected, if present, so that it is possible to inhibit unauthorized copying of copy-protected audio information.

It is alternatively possible not to inhibit copy-protected information but merely to detect that the audio signal to be copied comprises an auxiliary signal, and to signal that in the relevant case the information is protected and should not be copied.

Such a device, which is also intended for the consumer market, for recording a digital audio signal on the record carrier, comprising a coder for sub-band coding of the digital audio signal of given sample frequency 1/T, wherein the coder comprises:

- analysis filter means responsive to the audio signal to generate a plurality of P sub-band signals, which analysis filter means divide the frequency band of the audio signal into consecutive sub-bands having band numbers p($1 \leqq p \leqq P$) in accordance with a filter method using sample frequency reduction, which analysis filter means are further adapted to apply the P sub-band signals to P outputs, which outputs are coupled to P corresponding inputs of a
- recording unit which is constructed to record the P sub-band signals on the record carrier, which device is capable of realizing this, is characterized in that the device further comprises a detection unit coupled to the analysis filter means, in that the detection unit is adapted to detect the presence of an auxiliary signal in one or more of the sub-band signals and to generate a control signal upon detection of the auxiliary signal and to apply the control signal to an output, in that said output is coupled to a signalling unit, and in that the signalling unit is constructed to signal that the audio signal to be recorded, when a control signal is present, is an audio signal containing an auxiliary signal.

The above recording devices, which are intended for the consumer market, may be characterized further in that the coder further comprises signal combination means coupled to the analysis filter means, in that the signal combination means are adapted to selectively add the auxiliary signal, in the absence of a control signal, to one or more of the sub-band signals to form P composite sub-band signals and to apply said P composite sub-band signals to P outputs, which P outputs are coupled to the P corresponding inputs of the recording unit. This enables a user of the device to provide his recordings, if desired, with a copy inhibit code, in order to ensure that no copies can be made of record carriers made by the user and provided with his own recordings.

The devices intended for the consumer market may alternatively be characterized in that the coder further comprises signal combination means coupled to the analysis filter means, in that the signal combination means are adapted to add the auxiliary signal, in the absence of the control signal, to one or more of the sub-band signals to form P composite sub-band signals and to apply said P composite sub-band signals to P outputs, which P outputs are coupled to the P corresponding inputs of the recording unit. In that case there is no longer a selection possibility and in all cases an auxiliary signal will be added to the audio signal to be recorded, which does not yet contain the auxiliary signal. This enables original recordings (not provided with the auxiliary signal) or prerecorded tapes (neither provided with the auxiliary signal) to be copied, while it is not possible to make copies of the recordings thus copied.

Embodiments of the invention will now be described in more detail, by way of example, with reference to the drawings in which:

Fig. 1 shows a block diagram of a preferred embodiment of a transmit-receive system comprising a coder and a decoder in accordance with the invention,

Fig. 2 illustrates diagrammatically the quantization method in the coder,

Fig. 3 shows a device for recording a digital audio signal on a record carrier,

Fig. 4 shows a device for reproducing the signal recorded on the record carrier by means of the device shown in Fig. 3,

Fig. 5 shows another embodiment,

Fig. 6 shows a further embodiment,

Fig. 7 shows still another embodiment, and

Fig. 8 shows yet another embodiment of a device for recording a digital audio signal.

Fig. 1 diagrammatically shows a system comprising a transmitter 1 and a receiver 2 for adding and extracting respectively, extra information to and from a digital audio signal having a predetermined format, which information is transferred via or stored in medium 3. This medium can be a transmission channel but, for example, also a compact disc or a magnetic tape or disc.

The transmitter comprises a coder in the form of a processor 7 having an input terminal 4 for the digital signal u(k) having the predetermined format and an input terminal 5 for the additional digital auxiliary signal v(k) and having an output terminal 6. The output terminal 6 of the processor circuit 7 is coupled to the medium 3.

The receiver 2 comprises a delay circuit 9 having a delay τ, as well as a decoder in the form of a processor circuit 10. The input terminals of these two circuits are connected to one another and arranged for receiving the digital compound signal produced by the medium 3. At the output terminal of the delay circuit 9 the main signal is available again, as will be explained hereinafter, in the form of a signal u'(k) and at the output terminal of processor circuit 10 the auxiliary signal is available in the form of a signal v'(k).

The operation of the system according to Fig. 1 is as follows. At the input terminal of the transmitter 1 consecutive samples of the signal u(k) are presented. For example, in the case of an audio signal formed in accordance with the compact disc standard, each signal sample comprises 16 bits and the sampling rate is 44.1 kHz. In the processor circuit 7 it is determined how much information of the signal v(k) can be added to each sample of the signal u(k) on the basis of the chosen method according to which the auxiliary signal v(k) is added, that is, by means of temporal masking or simultaneous frequency sub-band masking or by means of a combination of the two. If temporal masking is used, this may be done in the time intervals shortly before and/or shortly after a loud passage in the signal u(k) and if simultaneous masking is chosen, it will be possible to add information about the signal v(k) to each signal sample of the signal u(k) by means of the subdivision into frequency sub-bands. As stated earlier, a combination of the two types of masking is possible. The combined output signal of the processor circuit 7 is reconverted in a converter 29 into the predetermined format of the digital main signal and applied to the medium 3.

In the receiver 2 the received signal is subjected to a decoding operation in the processor circuit 10 in order to split up the signals u(k) and v(k), so that at the output of circuit 10 the signal v'(k) is available, whereas through delay circuit 9, whose delay is equal to that which is produced by the processor circuit 10, the signal u'(k) is available in synchronism with the signal v'(k).

In the sequel the structure of the processor circuits 7 and 10 will be explained.

The processor circuit 7 comprises filter banks 22 and 23 for splitting up through sample frequency reduction the respective signals u(k) and v(k) into P consecutive sub-bands, whose bandwidths approximately correspond with the critical bandwidths of the human hearing in the respective frequency bands. The use and structure of such filter banks is known from, for example, the above article by Krasner and the chapter of "Sub-band coding" in the book entitled "Digital coding of waveforms" by N.S. Jayant and p. Noll, Prentice Hall Inc., Englewood Cliffs, New Jersey, 1984, pp. 486-509. Each of the p sub-band signals of filter bank 22 is applied to an adaptive quantizer 24(p), with $1 \leqq p \leqq P$, whereas each sub-band output signal of filter bank 23 is applied to an attenuator 25(p), with $1 \leqq p \leqq P$. The output signals of summing circuit 26(p) are now applied to a synthesis filter bank 27 in which the P sub-bands are combined to a signal having the same bandwidth as the original signals u(k) and v(k). The output signal of the synthesis filter bank 27 is encoded in a converter 29 into a digital signal having a predetermined format, for example, 16 bits, and applied to the medium 3 as a compound signal s(k).

If the number of quantization levels per frequency band in the transmitter 2 is chosen in the right way, nothing can be perceived in the digital signal applied to medium 3 of the addition of the signal v(k), provided that the condition is fulfilled that the amplitude of an auxiliary signal sample to be added is smaller than q/2 in each frequency sub-band for each sample of $u_p(k)t$ where q is the quantization step of that sample.

At the receive end the original signal u(k) can now be reproduced directly without any adaptation by means of a non-adapted device, because in the compound digital signal s(k) the extra information of the signal v(k) is not audible, because it is masked by the signal u(k).

A receiver which is indeed suitable for receiving both the signal u(k) and the signal v(k), for example, a D2MAC television receiver with surround-sound reproduction features comprises, however, a filter bank 31 which is arranged in the same way as the filter bank 22. This filter bank 31 splits up again the received compound signal s(k) into P sub-bands having the same bandwidths and central frequencies as the sub-bands of the filter bank 22. Each of these sub-band signals is applied to an adaptive quantizer 33(p), with $1 \leqq p \leqq P$. A proper dimensioning of this quantizer provides that for each sub-band the signal $u_p(k)$ is again obtained from each of the P sub-bands after quantization. By subtracting each of these sub-band signals $u_p(k)$ from the compound sub-band signal $s_p(k)$ in a subtracting circuit 34(p), the signal $v_p(k)$ is obtained for each sub-band p. Each of these signals

$v_p(k)$ is amplified in an amplifier 35(p), with $1 \leqq p \leqq P$, by a factor G which is the same as that which is used in the coder for attenuating the relevant sub-band and, subsequently, these scaled signals $v_p(k)$ are applied to a synthesis filter bank 36 which reconstructs the signal v'(k) from the individual sub-bands $v_p(k)$. The signal u'(k) can be extracted directly, as observed hereinbefore, from the compound signal s(k) and needs only to be delayed in a delay circuit 9 over a time which is equal to the delay time introduced by the processor 10, if the main signal and the auxiliary signal are desired to be synchronous.

In the case of a television transmit-receive system with surround-sound reproduction facilities, in the left channel the signals u(k) and v(k) may be the digital reproduction of, for example, the signal LV + LA and the signal LA respectively. An unmodified receiver will receive the complete sound signal LV + LA and can reproduce this without complications, whereas in a modified receiver, the signals LA and LV can be applied separately to the relevant reproduction channels after u(k) and v(k) have been split up by means of a subtracting circuit.

In the sequel it will be discussed in what way the adaptive quantizers 24(p) and 33(p) can be arranged in the transmitter and receiver of the system according to Fig. 1 so as to obtain in an unequivocal manner an adaptive quantization for each of the sub-band signals. For this purpose the number of quantization steps desired for each of the sub-bands is determined beforehand, which this number i(p) is constant for each of the sub-bands.

In view of the wish that quantization be adaptive, the quantization steps are to be chosen approximately in proportion to the signal size. For this purpose the amplitude axis is subdidived into sections T, whilst, if the amplitude of a sample of the signal u(k) is situated in a specific section T_n, where n is an integer, the quantization steps for that sample have a specific magnitude which is equal to the magnitude of the section T_n. The quantization level is positioned in the centre of said section, so as to allow the auxiliary signal v(k) to have equal amplitude ranges on either one of the two sides of this section relative to the quantization level, without the compound signal $s_p(k)$ being situated in another quantization section.

Since one wishes to choose the quantization steps in proportion to the maximum signal size, and the number of quantization steps is fixed, the magnitudes of the sections T which always determine the magnitude of the quantization step, have to enhance in proportion to the amplitude. Therefore, the variation of the section magnitudes is preferably exponential, each section varying from $a^{(n-1/2)}$ to $a^{(n+1/2)}$ where $\underline{a}$ is a constant and $\underline{n}$ an integer. The quantization level belonging to a specific section T_n is then $1/2(a^{n+1/2} + a^{n-1/2})$.

Fig. 2 shows an amplitude axis on which the division of the quantization levels according to the embodiment is shown. Depending on the absolute value of the maximum amplitude $\hat{u}(k)$ of the signal u(k) the quantization step is equal to the size of the section in which $\hat{u}(k)$ is located and thus equal to $a^{(n+1/2)} - a^{(n-1/2)}$. In this case the choice of the value of the factor $\underline{a}$ is free However, it is often desired that also the value 0 is a quantization level, because it does not matter then whether the maximum signal level of u(k) is positive or negative, whereas relatively small signal amplitudes are also avoided to be quantized at a considerably higher quantization level. This provides the additional requirement that the chosen quantization level is an integer number of times the quantization step. This requirement limits the choice of the constant $\underline{a}$ to $a = (2k + 1)/(2k - 1)$ with k = 1,2 ...; that is to say, a = 3; a = 5/3; a = 7/5 ... and so on.

The consequence of the choice of the quantization steps according to this preferred embodiment is the fact that in the decoding arrangement the signal $v_p(k)$ can always be extracted from the compound signal s(k) in an unequivocal manner, because with a specific signal amplitude, always the same quantization level is decided on. When this quantization level and thus $u_p(k)$ is determined, $u_p(k)$ can be subtracted from the compound signal so as to thus determine the signal $v_p(k)$.

For controlling the respective quantizers 24(p) and 32(p), the processor circuit 7 comprises quantization step determining circuits 28(p) and processor circuit 10 the quantization step determining circuits 32 respectively, the structure of these circuits being basically identical. The circuits 28(p) and 32(p) comprise memory sections 28'(p) and 32'(p) respectively, in which for each sub-band the predetermined value for the basic number $\underline{a}$ is stored, which may be different for each sub-band. The circuits 28(p) and 32(p) compute for each sample of $u_p(k)$ and $s_p(k)$ respectively, the size of the quantization step on the basis of the above-described quantization procedure and apply through outputs the values of these steps to the respective quantizers 24(p) and 33(p). A value derived from the value $\underline{a}$ in the respective memory sections 28'(p) and 32'(p) is also applied to a control input of the respective attenuators 25(p) and the respective amplifiers 35(p) so as to attenuate and amplify respectively, the signals $v_p(k)$ by a factor G. The attenuation factor or gain factor G respectively, derived from the value $\underline{a}$ is $2a/(a - 1)$. It is known that $\hat{u}(k)$, the maximum amplitude of the signal u(k), is equal to $a^{(n+1/2)}$ as a maximum whereas the maximum permissible amplitude $\hat{v}(k)$ of the auxiliary signal v(k) is then equal to $1/2[a^{(n+1/2)} - a^{(n-1/2)}]$. Now $\hat{u}(k)/\hat{v}(k) = 2a/(a-1)$. If it is provided beforehand that always $\hat{v}(k) < \hat{u}(k)$, which in practice can be realised without any problems, it is always certain that $\hat{v}(k) < q/2$ if for the factor G is chosen $G = 2a/(a - 1)$. In practical cases the condition $\hat{v}(k) < \hat{u}(k)$ has often been fulfilled automatically because of

the relationship which exists between these two signals.

In order to avoid $\hat{v}(k)$ nevertheless exceeding the value q/2 in any way, the output line of each attenuator 25(p) can comprise the limiter 30(p) shown in a dashed line in Fig. 1, which limiter receives information about the limitation value to be set from the circuits 28(p) and limits the output signal of the attenuator 25(p) to a maximum of q/2.

If a choice is made in favour of simultaneous masking combined with temporal masking, the circuits 28(p) and 32(p) comprise the circuits necessary for comparing the current sample of $u_p(k)$ to one or more previous samples so as to decide to a larger quantization step on the basis of pre-stored information about the variation of the temporal masking curve belonging to a specific maximum amplitude of $u_p(k)$, if the current sample has a lower amplitude than the amplitude of one or more of the previous samples.

In the case of block quantization, a buffer circuit is to be provided between each of the P outputs of the filter bank 22 and the input of the relevant quantizer 24(p), which circuit constantly stores a block of M signal samples, determines the maximum block amplitude and uses this value for determining the quantization step for the entire block.

Finally, it is observed that additional room can be found for adding v(k) in a sub-band p by also considering the amplitude variations in adjacent sub-bands. If, in an adjacent sub-band, a large amplitude of u(k) occurs, whereas in the p sub-band amplitude of u(k) is very small or even zero, one may decide, on the basis of the masking properties of the signal in this adjacent sub-band, yet to allow a specific amount of the signal v(k) to enter the sub-band p.

It is further pointed out that at the output of the quantizers 33(p) a signal $u_p(k)$ is available which basically has less quantization noise than the signal s(k) so that in a receiver comprising a decoder a better replica of the signal u(k) can be derived from these output signals by means of an additional synthesis filter.

Fig. 3 shows a device for recording a digital audio signal, such as the digital audio signal u(k) in Fig. 1, on a record carrier. The device comprises a coder 7' which bears much resemblance to the coder shown in Fig. 1. The only difference is that the synthesis filter bank 27 has been dispensed with. Instead, the outputs of the summing circuit 26(p) are coupled to a recording unit 47. This recording unit is constructed to record the P sub-band signals applied to its inputs on a record carrier 48. Averaged over all sub-bands this enables such a data reduction to be achieved that the information to be recorded on the record carrier is recorded with, for example, 4 bits per sample, while the information applied to the input 4 comprises, for example, 16 bits per sample.

The auxiliary signal V(k) is generated in an auxiliary signal generator 40 which has an output coupled to the input 5, to apply the auxiliary signal to the coder 7'. By means of the coder 7' the auxiliary signal is inserted in the audio signal in the manner described hereinbefore. The auxiliary signal can thus be inserted into one or more of the sub-band signals into which the audio signal (k) has been divided.

Preferably, the auxiliary signal is accommodated in one or more of the lower sub-bands (of low frequency). In the sub-bands which are situated in the low-frequency range the signal content of the audio signal is generally maximal. This means that the masking threshold in said sub-band(s) is also high. This enables an auxiliary signal of large amplitude to be inserted in the audio signal. This simplifies detection of the auxiliary signal.

Thus, by means of the device shown in Fig. 3 record carriers 48 are obtained on which the audio signal including the auxiliary signal is recorded. The method of recording on the record carrier 48, as is effected in the recording unit 47, is not relevant to the present invention. It is possible, for example, to employ a recording method as known in RDAT or SDAT recorders. The operation of RDAT and SDAT recorders is known per se and is described comprehensively inter alia in the book "The art of digital audio" by J. Watkinson, Focal Press (London) 1988. Obviously, the recording unit 47 should be capable of converting the parallel data stream of the P sub-band signals into a signal stream which can be recorded by means of an RDAT or SDAT recorder.

Fig. 4 shows diagrammatically a device for reproducing the audio signal as recorded on the record carrier 48 by means of the device shown in Fig. 3. For this purpose the device comprises a read unit 41 which is constructed to read the data stream from the record carrier 48 and to supply the P sub-band signals via P outputs. These P sub-band signals are then applied to P inputs of a synthesis filter bak 27', having the same function as the filter bank 27 in Fig. 1. This means that the P sub-band signals are recombined to form a digital signal of a predetermined format of, for example, 16 bits. After D/A conversion in the D/A converter 42 the audio signal is then available again on the output terminal 43.

The audio signal, then still contains the auxiliary signal. However, this auxiliary signal is not audible because it is masked by the audio signal.

Fig. 5 shows a device for recording an audio signal, for example the audio signal reproduced by the device shown in Fig. 4. Such a device is intended for example for the consumer market. The device is capable of normally recording audio information not containing a copy inhibit code on a record carrier. However, the device comprises a detector unit to detect a copy inhibit code inserted in the audio signal to inhibit recording of this audio signal.

The device shown in Fig. 5 bears much resem-

blance to the device shown in Fig. 3, the difference being that the device shown in Fig. 5 is not capable of inserting a copy inhibit code into an audio signal. This means that the elements bearing the reference numerals 23, 25(1) to 25(P), 28(1) to 28(P) and 26(1) to 26(P) are dispensed with. The device shown in Fig. 5 further comprises subtractor circuits 34(1) to 34(P), amplifiers 35(1) to 35(P), a synthesis filter bank 36, and a detector unit 50. The section 10' of the device shown in Fig. 5, indicated by means of a solid line, is in fact identical to the decoder 10 in Fig. 1. This means that the section 10' is adapted to filter out the auxiliary signal which, if present in the digital audio signal applied to the input 51, then becomes available on the output 52. The detector unit 50, which has an input 53 coupled to the output 52, is constructed to detect said auxiliary signal and to generate the control signal which is then applied to the control signal input 55 of the recording unit 47' via the output 54.

The recording unit 47' is constructed in such a way that if a control signal appears on the control signal input 55 the recording unit 47' does not record the sub-band signals applied to its inputs or seriously distorts these sub-band signals before they are recorded. In the absence of a control signal on the control signal input 55 the recording unit 47' will record the sub-band signals applied to its inputs.

In this way an audio signal containing a copy-inhibit code in the form of the auxiliary signal inserted in the audio signal is prevented from being recorded on the record carrier 48' by the device.

In the device shown in Fig. 5 it is assumed that the auxiliary signal is accommodated in a number of sub-band signals. However, as already stated, the auxiliary signal may also be inserted in only one sub-band signal. In that case only one subtractor circuit 34 and one amplifier 35 are required and the filter bank 36 comprises only one input. In the synthesis filter bank 36 the auxiliary signal is converted into a digital signal of, for example, 16 bits.

The detector unit 50 may be a detector unit which can directly detect the presence or absence of a digital signal. Another possibility is the use of an analog detector unit 50. In that case the output signal of the filter bank is first converted into an analog signal. The detector unit 50 then comprises a narrow band band-pass filter, a rectifier and a threshold detector. If the input signal of the device is an analog signal an A/D converter is arranged between the terminal 51 and the input of the filter bank 22.

It is now assumed that the auxiliary signal is inserted in only one sub-band, for example the lower sub-band. In that case it may be adequate to use a simpler detection circuit in the form of a digital filter coupled to the output P = 1 of the analysis filter means 22. This filter may be for example a recursive filter having a sharp filter characteristic, the maximum in the filter characteristic coinciding with the frequency of the auxiliary signal. The output of the digital filter may then be coupled to the input 53 of the detector unit 50. In that case the elements 34(1) to 34(P), 35(1) to 35(P) and 36 may be dispensed with.

The embodiment shown in Fig. 6 bears much resemblance to that shown in Fig. 5. The output of the detector unit 50 is now coupled to an input of a signalling unit 56, for example in the form of a light-emitting diode. The auxiliary signal in the audio signal then does not function as a copy inhibit code but merely as a signalling code to signal that it is, in fact, not allowed to copy the relevant audio signal. In this case the decision whether the audio signal is subsequently copied depends on the user himself.

If the presence of the auxiliary signal in the audio signal to be recorded is detected the detector unit 50 generates a control signal upon which the signalling unit 56 (the diode) lights up. The user may now decide to discontinue recording.

From Fig. 6 it is evident that the inputs of the recording unit 57' are now coupled to the outputs of the analysis filter means 22, so that if the user should decide to continue recording, the audio signal, including the auxiliary signal, will be recorded.

Fig. 7 shows another embodiment of the device. The device shown in Fig. 6 is an extension of the device shown in Fig. 5. The controllable amplifiers 35(1) to 35(P) are not shown for simplicity. The device shown in Fig. 6 is in addition adapted to selectively insert a copy inhibit code to the signal to be recorded, assuming that the signal applied to the input 4 does not yet contain a copy inhibit code. In that case recording will be inhibited by means of the control signal applied to the control signal input 55 of the recording unit 47'.

The circuit bearing the reference numeral 7" is substantially identical to the circuit 7' in Fig. 3, the difference being that it comprises an additional control signal input 60 via which a control signal can be applied to switches S_1 to S_p arranged in the lines to the summing circuit 26(1) to 26(P).

If the signal u(k) applied to the input 4 does not contain a copy inhibit code the signal can be recorded on the record carrier 48'. If a control signal is applied to the switches S_1 to S_p via the input 60 the switches will be in the position shown. This means that the auxiliary signal V(k) is added to the signal to be recorded via the summing circuits 26(1) to 26(P), to inhibit further copying. If another control signal is applied to the input 60, the switches S_1 to S_p will be in the position not shown. This means that the value "0" is applied to all the summing circuits 26, so that merely the signal u(k), without auxiliary signal, is recorded on the record carrier 48'.

Again it is obvious that if the auxiliary signal is recorded in only one sub-band only one summing circuit 26(P) is provided and the control signal is applied to only one switch S_p via the terminal 60.

Fig. 8 shows an embodiment which bears much resemblance to the embodiment shown in Fig. 7. The embodiment shown in Fig. 8 excludes the possibility of making a choice whether the audio signal which does not contain a copy inhibit code will be provided with such an inhibit code. This means that if the detector unit 50 detects that the signal to be recorded does not contain an auxiliary signal, this auxiliary signal will be inserted automatically. Fig. 8 shows that interconnections are now arranged between the outputs of the amplifiers 25(1) to 25(P) and the (second) inputs of the signal combination units 26(1) to 26(P). The switches S_1 to S_p and the control signal input 60 in Fig. 7 are consequently dispensed with.

Such a device is very useful if it has been decided to allow copies to be made only of prerecorded record carriers (which are not provided with said auxiliary signal) and original recordings (which neither contain said auxiliary signal), copying of these copies, however, being inhibited. A prerecorded record carrier can now be copied normally. However, the resulting copy is provided with an auxiliary signal and cannot be copied again.

It is to be noted that all the embodiments have been described for devices for recording a digital audio signal on a magnetic record carrier. However, this should not be regarded as a limitation to magnetic record carriers only. The invention likewise relates to devices which record the audio signal on an optical record carrier. In the future this possibility will become available to the consumer. With the advent of the CD erasable and the CD write-once and magnetooptical recording technologies.

Claims

1. A coder for incorporating extra information in the form of an auxiliary signal v(k) in a digital audio signal u(k) having a predetermined format, characterised in that the coder (7) comprises means (22, 28) for analysing the digital signal, means (24) for quantizing the analysed digital signal in an unequivocal manner and means (28') for determining, on the basis of the acoustic properties of the human auditory system, the amount of extra information that can be added to the quantized digital signal without this extra information being audible with unmodified detection; means (26) for combining the extra information and the quantized digital signal to a compound signal.

2. A coder as claimed in Claim 1, characterized in that it comprises means (29) for reconverting the compound signal into a digital signal having the predetermined format.

3. A coder as claimed in Claim 1 or 2, characterised in that the means for analysing the digital signal comprise analysis filter means (22) for generating a number of P sub-band signals in response to the digital signal, which analysis filter means divide the frequency band of the digital signal into consecutive sub-bands having band numbers p ($1 \leqq p \leqq P$), whereas for each of the respective sub-bands (P) means (24(p)) are provided for quantizing the digital signal in an unequivocal manner and means (26) for combining the respective quantized sub-band signals and the auxiliary signal for constituting P compound sub-band signals.

4. A coder as claimed in Claim 3, where dependent on Claim 2, characterized in that synthesis filter means (27) are provided for constructing a replica of the compound signal in response to the compound sub-band signals, which synthesis filter means combine the sub-bands according to a filter method with sample frequency enhancement corresponding to the sub-division in the analysis filter means (22).

5. A coder as claimed in Claim 4, characterised in that the auxiliary signal v(k) is a digital audio signal and in that analysis filter means (23) are provided for generating a number of P sub-band signals in response to the auxiliary signal v(k), which analysis filter means divide the frequency band of the auxiliary signal into consecutive sub-bands having band numbers p ($1 \leqq p \leqq P$) according to a filter method with sample frequency reduction.

6. A coder as claimed in Claim 4 or 5, characterised in that the bandwidths of the sub-bands approximately correspond to the critical bandwidths of the human auditory system in the respective frequency ranges.

7. A coder as claimed in Claims 4, 5 or 6, characterised in that the means (24) for quantizing the digital signal in an unequivocal manner are arranged for adaptively quantizing this signal and in that for each sub-band the size of the quantization step depends on the amplitude of the digital signal sample, while there is an exponential relationship with a preset basic number a between the possible successive steps.

8. A coder as claimed in Claim 7, characterised in that the size of the quantization step of a sample to be quantized also depends on the size of at least a previous sample.

9. A coder as claimed in Claim 7 or 8, characterised in that means (25) are provided for attenuating each sub-band signal of the auxiliary signal by a

factor G, for which holds G = 2a/(a - 1).

10. A decoder to be used in combination with a coder (7) as claimed in Claims 5 to 9, characterised in that the decoder (10) comprises analysis filter means (31) for generating a number of compound sub-band signals in response to the compound signal, which analysis filter means divide the frequency band of the compound signal into consecutive sub-bands having band numbers p ($1 \leqq p \leqq P$) according to a filter method with sample frequency reduction, while the bandwidths of the sub-bands correspond with those of the analysis filter means (22) in the coder; means (33) for quantizing compound sub-band signals in an unequivocal manner; means (34) for subtracting the respective quantized sub-band signals from the corresponding sub-band signals of the compound signals for constituting sub-band difference signals, and synthesis filter means (36) for constructing a replica of the auxiliary signal v'(k) in response to the sub-band difference signals, which synthesis filter means combine the sub-bands according to a filter method with sample frequency enhancement corresponding to the sub-division in the analysis filter means.

11. A decoder as claimed in Claim 10, characterised in that the means (33) for quantizing the digital signal in an unequivocal manner are arranged for adaptively quantizing this signal and in that per sub-band the size of the quantization step depends on the amplitude of the sample of the digital signal, whilst between the possible successive steps there is an exponential relationship with a predetermined basic number a.

12. A decoder as claimed in Claim 9, characterised in that means (35) are provided for amplifying each sub-band difference signal by a factor G, which complies with G = 2a/(a - 1).

13. A device for recording a digital audio signal on a record carrier (48), comprising a coder (7) as claimed in any one of the claims 1 to 9.

14. A device for recording a digital audio signal on a record carrier (48'), comprising a coder for sub-band coding of the digital audio signal of given sample frequency 1/T, the coder comprising:
- analysis filter means (22) responsive to the audio signal to generate a plurality of P sub-band signals, which analysis filter means divide the frequency band of the audio signal in conformity with a filter method with sample frequency reduction into consecutive sub-bands having band numbers p($1 \leqq p \leqq P$), which analysis filter means are further adapted to apply the P sub-band signals to P outputs, which outputs are coupled to P corresponding inputs of a
- recording unit (47') which is adapted to record the P sub-band signals on the record carrier,

characterized in that the device further comprises a detection unit (50) coupled to the analysis filter means (22), in that the detection unit is adapted to detect the presence of an auxiliary signal in one or more of the sub-band signals and to generate a control signal upon detection of the auxiliary signal and to apply the control signal to an output (54), in that said output is coupled to a control signal input (55) of the recording unit (47'), and in that the recording unit is adapted to inhibit recording of the audio signal in the presence of the control signal and to record the audio signal in the absence of the control signal.

15. A device for recording a digital audio signal on a record carrier (48'), comprising a coder for sub-band coding of the digital audio signal of given sample frequency 1/T, wherein the coder comprises:
- analysis filter means (22) responsive to the audio signal to generate a plurality of P sub-band signals, which analysis filter means divide the frequency band of the audio signal into consecutive sub-bands having band numbers p($1 \leqq p \leqq P$) in accordance with a filter method using sample frequency reduction, which analysis filter means are further adapted to apply the P sub-band signals to P outputs, which outputs are coupled to P corresponding inputs of a
- recording unit (47') which is adapted to record the P sub-band signals on the record carrier,

characterized in that the device further comprises a detection unit (50) which is coupled to the analysis filter means (22), in that the detection unit is adapted to detect the presence of an auxiliary signal in one or more of the sub-band signals and to generate a control signal upon detection of the auxiliary signal and to apply the control signal to an output (54), in that said output is coupled to a signalling unit (56), and in that the signalling unit is constructed to signal that the audio signal to be recorded, when the control signal is present, is an audio signal containing an auxiliary signal.

16. A device as claimed in Claim 14 or 15, characterized in that the coder further comprises signal combination means (26, S1 to Sp) coupled to the analysis filter means, in that the signal combination means are adapted to selectively (via 60) add

the auxiliary signal, in the absence of the control signal, to one or more of the sub-band signals to form P composite sub-band signals and to apply said P composite sub-band signals to P outputs, which P outputs are coupled to the P corresponding inputs of the recording unit (47') (Fig 7).

17. A device as claimed in Claim 14 or 15, characterized in that the coder further comprises signal combination means (26) coupled to the analysis filter means (22), in that the signal combination means are adapted to add the auxiliary signal, in the absence of the control signal, to one or more of the sub-band signals to form P composite sub-band signals and to apply said P composite sub-band signals to P outputs, which P outputs are coupled to the P corresponding inputs of the recording unit (Fig 8).

18. A device as claimed in Claim 14, characterized in that the coder forms part of a coder as claimed in any one of the Claims 1 to 9.

19. A record carrier on which a digital audio signal has been recorded by means of a device as claimed in any one of the Claims 13, 16, 17 or 18, characterized in that the audio signal is divided into P sub-band signals and in that the audio signal is combined with an auxiliary signal in one or more of the sub-bands in order to obtain P composite sub-band signals recorded on the record carrier (48), and in that the auxiliary signal is selected in such a way that during reproduction of the composite audio signal recorded on the record carrier via a loudspeaker device said auxiliary signal is substantially imperceptable to a listener.

Patentansprüche

1. Kodierer zum Aufnehmen zusätzlicher 'nformation in Form eines Hilfssignals v(k) in ein digitales Audiosignal u(k) eines vorbestimmten Formats, dadurch gekennzeichnet, daß der Kodierer (7) mit Mitteln (22, 28) zum Analysieren des digitalen Signals, mit Mitteln (24) zum auf eindeutige Art und Weise Quantisieren des analysierten Signals, sowie mit Mitteln (28') zum auf Grund der akustischen Eigenschaften des menschlichen Ohres Bestimmen der Menge zusätzlicher Information, die dem quantisierten digitalen Signal zugefügt werden kann, ohne daß diese zusätzliche Information bei einer unmodifizierten Detektion hörbar ist, und mit Mitteln (26) zum Kombinieren der zusätzlichen Information und des quantisierten digitalen Signals zu einem zusammengesetzten Signal versehen ist.

2. Kodierer nach Anspruch 1,dadurch gekennzeichnet, daß dieser mit Mitteln (29) versehen ist, zum Umwandeln des zusammengesetzten Signals in ein digitales Signal des vorbestimmten Formats.

3. Kodierer nach Anspruch 1 oder 2, dadurch gekennzeichnet, daß die Mittel zum Analysieren des digitalen Signals Analysenfiltermittel (22) aufweisen zum in Antwort auf das digitale Signal Erzeugen von P Teilbandsignalen, wobei diese Analysenfiltermittel das Frequenzband des digitalen Signals nach einem Filterverfahren mit Abtastfrequenzwertverringerung in Aufeinanderfolgende Teilbänder mit Bandnummern p ($1 \leqq p \leqq P$), wobei für jedes der betreffenden Teilbänder (P) Mittel (24(p) vorgesehen sind zum auf eindeutige Weise Quantisieren des digitalen Signals und Mittel (26) zum Kombinieren der betreffenden quantisierten Teilbandsignale und der entsprechenden Teilbandsignale des Hilfssignals zum Bilden von P zusammengesetzten Teilbandsignalen.

4. Kodierer nach Anspruch 3 insofern abhängig von Anspruch 2, dadurch gekennzeichnet, daß der Kodierer weiterhin mit Synthesefiltermitteln (27) versehen ist zum in Antwort auf die zusammengesetzten Teilbandsignale Bilden einer Replik des zusammengesetzten Signals, wobei die Synthesefiltermittel die Teilbänder nach einem der Aufteilung in den Analysenfiltermitteln entsprechenden Filterverfahren mit Abtastfrequenzwerterhöhung zusammenfügen.

5. Kodierer nach Anspruch 4, dadurch gekennzeichnet, daß das Hilfssignal v(k) ein digitales Audiosignal ist und daß Analysenfiltermittel (23) vorgesehen sind zum in Antwort auf das Hilfssignal Erzeugen einer Anzahl von P Teilbandsignalen, wobei die Analysenfiltermittel das Frequenzband des Hilfssignals v(k) nach einem Filterverfahren mit Abtastfrequenzwertverringerung in aufeinanderfolgende Teilbänder mit bandnummern p ($1 \leqq p \leqq P$) aufteilen.

6. Kodierer nach Anspruch 4 oder 5, dadurch gekennzeichnet, daß die Bandbreiten der Teilbänder den kritischen Bandbreiten des menschlichen Ohres in den betreffenden Frequenzbereichen annähernd entsprechen.

7. Kodierer nach Anspruch 4, 5 oder 6, dadurch gekennzeichnet, daß die Mittel (24) zum auf eindeutige Weise Quantisieren des digitalen Signals zum adaptiven Quantisieren dieses Signals eingerichtet sind und je Teilband die Größe des Quantisierungsschrittes von der Amplitude eines Abtastwertes des digitalen Signals abhängig ist,

wobei es zwischen den möglichen aufeinanderfolgenden Schritten einen exponentiellen Zusammenhang mit einer orbestimmten Grundzahl a gibt.

8. Kodierer nach Anspruch 7, dadurch gekennzeichnet, daß die Größe des Quantisierungsschrittes eines zu quantisierenden Abtastwertes zugleich von der Größe mindestens eines vorhergehenden Abtastwertes abhängig st.

9. Kodierer nach Anspruch 7 oder 8, dadurch gekennzeichnet, daß Mittel (25) vorgesehen sind um jedes Teilbandsignal des Hilfssignals um einen Faktor G zu dämpfen, wobei gilt: G = 2a / (a - 1).

10. Dekoder zum Gebrauch zusammen mit einem Kodierer (7) nach den Ansprüchen 5 b/e 9, dadurch gekennzeichnet, daß der Dekoder (10) mit Analysenfiltermitteln (31) versehen ist zum in Antwort auf das zusammengesetzte Signal Erzeugen einer Anzahl zusammengesetzter Teilbandsignale, wobei die Analysenfiltermittel das Frequenzband des zusammengesetzten Signals nach einem Filterverfahren mit Abtastfrequenzwertverringerung in aufeinanderfolgende Teilbänder mit Bandnummern p ($1 \leqq p \leqq P$) aufteilen, wobei die Bandbreiten der Teilbänder denen der Analysenfiltermittel (22) in dem Kodierer entsprechen, mit Mitteln (33) zum auf eindeutige Weise Quantisieren der zusammengesetzten Teilbandsignale, mit Mitteln (34) zum Subtrahieren der betreffenden quantisierten Teilbandsignale von den entsprechenden Teilbandsignalen des zusammengesetzten Signals zum Bilden von Teilbanddifferenzsignalen und mit Synthesefiltermitteln (36) zum in Antwort auf die Teilbanddifferenzsignale Bilden einer Replik des Hilfssignals v'(k), wobei die Synthesemittel die Teilbänder nach einem der Aufteilung in den Analysenfiltermitteln entsprechenden Filterverfahren mit Abtastfrequenzwerterhöhung zusammenfügen.

11. Dekoder nach Anspruch 10, dadurch gekennzeichnet, daß die Mittel (33) zum auf eindeutige Weise Quantisieren des digitalen Signals zum adaptiven Quantisieren dieses Signals eingerichtet sind und je Teilband die Größe des Quantisierungsschrittes von der Amplitude eines Abtastwertes des digitalen Signals abhängig ist, wobei es zwischen den möglichen aufeinanderfolgenden Schritten einen exponentiellen Zusammenhang mit einer vorbestimmten Grundzahl a gibt.

12. Dekoder nach Anspruch 11, dadurch gekennzeichnet, daß Mittel (35) vorgesehen sind um jedes Teilbanddifferenzsignal um einen Faktor G zu verstarken, wobei gilt: G = 2a / (a - 1).

13. Anordnung zum Aufzeichnen eines digitalen Audiosignals auf einem Aufzeichnungsträger (48) mit einem Kodierer (7) nach einem der Ansprüche 1 b/e 9.

14. Anordnung zum Aufzeichnen eines digitalen Audiosignals auf einem Aufzeichnungsträger (48) mit einem Kodierer zur Teilbandkodierung des digitalen Audiosignals einer bestimmten Abtastfrequenzwert 1/T, wobei der Kodierer mit den folgenden Elementen versehen ist:
    - Analysenfiltermitteln (22) zum in Antwort auf das Audiosignal Erzeugen einer Anzahl von P Teilbandsignalen, wobei diese Analysenfiltermittel das Frequenzband des Audiosignals nach einem Filterverfahren mit Abtastfrequenzwertverringerung in aufeinanderfolgende Teilbänder mit Bandnummern p ($1 \leqq p \leqq P$) aufteilen, wobei diese Analysenfiltermittel weiterhin dazu eingerichtet sind, P Ausgängen die P Teilbandsignale zuzuführen, wobei diese Ausgänge gekoppelt sind mit P entsprechenden Eingängen,
    - einer Aufzeichnungseinheit (47'), die zum Aufzeichnen der P Teilbandsignale auf dem Aufzeichnungsträger eingerichtet ist,

    dadurch gekennzeichnet, daß die Anordnung weiterhin eine mit den Analysenfiltermitteln (22) gekoppelte Detektionseinheit (50) aufweist, daß die Detektionseinheit zum Detektieren des Vorhandenseins eines Hilfssignals in einem oder mehreren der Teilbandsignale sowie zum Erzeugen eines Steuersignals bei Detektion des Hilfssignals und zum Zuführen dieses Steuersignals zu einem Ausgang (54) eingerichtet ist, daß dieser Ausgang mit einem Steuersignaleingang (55) der Aufzeichnungseinheit (47') gekoppelt ist und daß die Aufzeichnungseinheit zum Sperren der Aufnahme des Audiosignals beim Vorhandensein des Steuersignals und zum Aufzeichnen des Audiosignals beim Fehlen des Steuersignals eingerichtet ist.

15. Anordnung zum Aufzeichnen eines digitalen Audiosignals auf einem Aufzeichnungsträger (48') mit einem Kodierer zur Teilbandkodierung des digitalen Audiosignals mit der bestimmten Abtastfrequenz 1/T, wobei der Kodierer mit den folgenden Elementen versehen ist:
    - Analysenfiltermitteln (22) zum in Antwort auf das Audiosignal Erzeugen einer Anzahl von P Teilbandsignalen, wobei diese Analysenfiltermittel das Frequenzband des Audiosignals nach einem Filterverfahren mit Abtastfrequenzwertverringerung in aufein-

anderfolgende Teilbänder mit Bandnummern p ($1 \leq p \leq P$) aufteilen, wobei diese Analysenfiltermittel weiterhin dazu eingerichtet sind, P Ausgängen die P Teilbandsignale zuzuführen, wobei diese Ausgänge gekoppelt sind mit P entsprechenden Eingängen,

- einer Aufzeichnungseinheit (47'), die zum Aufzeichnen der P Teilbandsignale auf dem Aufzeichnungsträger eingerichtet ist,

dadurch gekennzeichnet, daß die Anordnung weiterhin eine mit den Analysenfiltermitteln (22) gekoppelte Detektionseinheit (50) aufweist, daß die Detektionseinheit zum Detektieren des Vorhandenseins eines Hilfssignals in einem oder mehreren der Teilbandsignale sowie zum Erzeugen eines Steuersignals bei Detektion des Hilfssignals und zum Zuführen dieses Steuersignals zu einem Ausgang (54) eingerichtet ist, daß dieser Ausgang mit einer Anzeigeeinheit (56) gekoppelt ist, die dazu eingerichtet ist, beim Vorhandensein des Steuersignals anzuzeigen, daß das aufzuzeichnende Audiosignal ein mit einem Hilfssignal versehenes Audiosignal ist.

16. Anordnung nach Anspruch 14 oder 15, dadurch gekennzeichnet, daß der Kodierer weiterhin mit Signalkombiniermitteln (26, S1 bis Sp) versehen ist, die mit den Analysenfiltermitteln gekoppelt sind, daß die Signalkombiniermittel dazu eingerichtet sind, beim Fehlen des Steuersignals das Hilfssignal nach Wunsch (über 60) einem oder mehreren der Teilbandsignale hinzuzufügen zur Bildung von P zusammengesetzten Teilbandsignalen und zum Zuführen dieser P zusammengesetzten Teilbandsignale zu P Ausgängen, die mit den P entsprechenden Eingängen der Aufzeichnungseinheit (47') gekoppelt sind (Fig. 7).

17. Anordnung nach Anspruch 14 oder 15, dadurch gekennzeichnet, daß der Kodierer weiterhin mit Signalkombiniermitteln (26) versehen ist, die mit den Analysenfiltermitteln (22) gekoppelt sind, daß die Signalkombiniermittel dazu eingerichtet sind, beim Fehlen des Steuersignals das Hilfssignal einem oder mehreren der Teilbandsignale hinzuzufügen zur Bildung von P zusammengesetzten Teilbandsignalen und zum Zuführen dieser P zusammengesetzten Teilbandsignale zu P Ausgängen, die mit den P entsprechenden Eingängen der Aufzeichnungseinheit gekoppelt sind (Fig.8).

18. Anordnung nach Anspruch 14, dadurch gekennzeichnet, daß der Kodierer einen Teil des Kodierers nach einem der Ansprüche 1 b/e 9 bildet.

19. Aufzeichnungsträger, auf dem mittels der Anordnung nach einem der Ansprüche 13, 16, 17 oder 18 ein digitales Audiosignal aufgezeichnet ist, dadurch gekennzeichnet, daß das Audiosignal in P Teilbandsignale aufgeteilt ist und daß zum Erhalten von P zusammengesetzten Teilbandsignalen, die auf dem Aufzeichnungsträger (48) aufgezeichnet sind, dem Audiosignal in einem oder mehreren der Teilbänder ein Hilfssignal zugefügt worden ist und daß das Hilfssignal derart gewählt worden ist, daß dieses Hilfssignal bei Wiedergabe des auf dem Aufzeichnungsträger aufgezeichneten zusammengesetzten Audiosignals über die Lautsprecheranordnung für einen Zuhörer im wesentlichen nicht wahrnehmbar ist.

Revendications

1. Codeur pour incorporer des informations supplémentaires sous la forme d'un signal auxiliaire v(k) dans un signal audionumérique u(k) ayant un format prédéterminé, caractérisé en ce que le codeur (7) comprend des moyens (22, 28) pour analyser le signal numérique, des moyens (24) pour quantifier le signal numérique analysé de manière non équivoque et des moyens (28') pour déterminer, sur la base des propriétés acoustiques du système auditif humain, la quantité d'informations supplémentaires que l'on peut ajouter au signal numérique quantifié sans que ces informations numériques supplémentaires soient audibles avec une détection non modifiée, des moyens (26) étant prévus pour combiner les informations supplémentaires et le signal numérique quantifié en un signal composite.

2. Codeur selon la revendication 1, caractérisé en ce qu'il comprend des moyens (29) pour reconvertir le signal composite en un signal numérique ayant le format prédéterminé.

3. Codeur selon la revendication 1 ou 2, caractérisé en ce que les moyens d'analyse du signal numérique comprennent des moyens de filtrage analytique (22) pour générer un nombre de P signaux de sous-bandes en réaction au signal numérique, ces moyens de filtrage analytique divisant la bande de fréquences du signal numérique en des sous-bandes consécutives ayant des nombres de bandes p ($1 \leq p \leq P$), tandis que, pour chacune des sous-bandes respectives (p), des moyens (24(p)) sont prévus pour quantifier le signal numérique de manière non équivoque et des moyens (26) sont prévus pour combiner les signaux de sous-bandes quantifiés respectifs et le signal auxiliaire pour constituer P signaux de sous-bandes composites.

4. Codeur selon la revendication 3, découlant de la revendication 2, caractérisé en ce que des moyens de filtrage synthétique (27) sont prévus pour construire une réplique du signal composite en réaciton aux signaux de sous-bandes composites, ces moyens de filtrage synthétique combinant les sous-bandes selon un procédé de filtrage avec augmentation de la fréquence d'échantillonnage correspondant à la subdivision dans les moyens de filtrage analytique (22).

5. Codeur selon la revendication 4, caractérisé en ce que le signal auxiliaire v(k) est un signal audionumérique et des moyens de filtrage analytique (23) sont prévus pour générer un nombre P de signaux de sous-bandes en réaction au signal auxiliaire v(k), ces moyens de filtrage analytique divisant la bande de fréquence du signal auxiliaire en des sous-bandes consécutives ayant des nombres de bandes p ($1 \leqq p \leqq P$) selon un procédé de filtrage avec réduction de la fréquence d'échantillonnage.

6. Codeur selon la revendication 4 ou 5, caractérisé en ce que les largeurs des sous-bandes correspondent approximativement aux largeurs de bande critiques du système auditif humain dans les plages de fréquences respectives.

7. Codeur selon la revendication 4, 5 ou 6, caractérisé en ce que les moyens (24) pour quantifier le signal numérique de manière non équivoque sont conçus pour quantifier ce signal de manière adaptative et que, pour chaque sous-bande, la grandeur du pas de quantification dépend de l'amplitude de l'échantillon de signal numérique, une relation exponentielle avec un nombre de base préréglé a existant entre les pas successifs possibles.

8. Codeur selon la revendication 7, caractérisé en ce que la grandeur du pas de quantification d'un échantillon à quantifier dépend également de la grandeur d'au moins un échantillon précédent.

9. Codeur selon la revendication 7 ou 8, caractérisé en ce que les moyens (25) sont prévus pour atténuer chaque signal de sous-bande du signal auxiliaire d'un facteur G, qui répond à la relation $G = 2a/(a - 1)$.

10. Décodeur à utiliser en combinaison avec un codeur (7) selon les revendications 5 à 9, caractérisé en ce que le décodeur (10) comprend des moyens de filtrage analytique (31) pour générer un certain nombre de signaux de sous-bandes composites en réaction au signal composite, ces moyens de filtrage analytique subdivisant la bande de fréquences du signal composite en des sous-bandes consécutives ayant des nombres de bandes p ($1 \leqq p \leqq P$) selon un procédé de filtrage avec réduction de la fréquence d'échantillonnage, tandis que les largeurs des sous-bandes correspondent à celles des moyens de filtrage analytique (22) dans le codeur, des moyens (33) pour quantifier de manière non équivoque les signaux de sous-bandes composites, des moyens (34) pour soustraire les signaux de sous-bandes quantifiés respectifs des signaux de sous-bandes correspondants des signaux composites pour former des signaux de différences de sous-bandes, et des moyens de filtrage synthétique (36) pour construire une réplique du signal auxiliaire v'(k) en réaction aux signaux de différence de sous-bandes, lesdits moyens de filtrage synthétique combinant les sous-bandes selon un procédé de filtrage avec augmentation de la fréquence d'échantillonnage correspondant à la subdivision dans les moyens de filtrage analytique.

11. Décodeur selon la revendication 10, caractérisé en ce que les moyens (33) pour quantifier le signal numérique de manière non équivoque sont agencés pour quantifier de manière adaptative ce signal et que, par sous-bande, la grandeur du pas de quantification dépend de l'amplitude de l'échantillon du signal numérique, tandis qu'entre les pas successifs possibles, il y a une relation exponentielle avec un nombre de base prédéterminé a.

12. Décodeur selon la revendication 9, caractérisé en ce que des moyens (35) sont prévus pour amplifier chaque signal de différence de sous-bande d'un facteur G qui répond à la formule $G = 2a/(a - 1)$.

13. Dispositif pour enregistrer un signal audionumérique sur un support d'enregistrement (48), comprenant un codeur (7) selon l'une quelconque des revendications 1 à 9.

14. Dispositif d'enregistrement d'un signal audionumérique sur un support d'enregistrement (48), comprenant un codeur pour le codage de sous-bandes du signal audionumérique de fréquence d'échantillon donnée 1/T, ce codeur comprenant :
    - des moyens de filtrage analytique (22) réagissant au signal audio pour générer une pluralité de P signaux de sous-bandes, ces moyens de filtrage analytique divisant la bande de fréquences du signal audio selon un procédé de filtrage avec réduction de la fréquence d'échantillonnage en des sous-

bandes consécutives ayant des nombres de bandes p ($1 \leqq p \leqq P$), ces moyens de filtrage analytique étant, en outre, à même d'appliquer les P signaux de sous-bandes à P sorties, lesdites sorties étant couplées à P entrées correspondantes

- d'une unité d'enregistrement (47') qui est conçue pour enregistrer les P signaux de sous-bandes sur le support d'enregistrement,

caractérisé en ce que le dispositif comprend, en outre, une unité de détection (50) reliée aux moyens de filtrage analytique (22), que l'unité de détection est à même de détecter la présence d'un signal auxiliaire dans un ou plusieurs signaux de sous-bandes, de générer un signal de commande lors de la détection du signal auxiliaire et d'appliquer le signal de commande à une sortie (54), que ladite sortie est reliée à une entrée de signal de commande (55) de l'unité d'enregistrement (47') et que l'unité d'enregistrement est à même d'empêcher l'enregistrement du signal audio en présence du signal de commande et d'enregistrer le signal audio en l'absence du signal de commande.

15. Dispositif d'enregistrement d'un signal audionumérique sur un support d'enregistrement (48'), comprenant un codeur pour le codage en sous-bandes du signal audionumérique de fréquence d'échantillonnage donnée 1/T, dans lequel le codeur comprend :

- des moyens de filtrage analytique (22) réagissant au signal audio pour générer un pluralité de P signaux de sous-bandes, ces moyens de filtrage analytique divisant la bande de fréquence du signal audio en des sous-bandes consécutives ayant des nombres de bandes p ($1 \leqq p \leqq P$) selon un procédé de filtrage avec réduction de la fréquence d'échantillonnage, lesdits moyens de filtrage analytique étant, en outre, à même d'appliquer les P signaux de sous-bandes à P sorties, lesquelles sont couplées à P entrées correspondantes
- d'une unité d'enregistrement (47') qui est conçue pour enregistrer les P signaux de sous-bandes sur le support d'enregistrement,

caractérisé en ce que le dispositif comprend, en outre, une unité de détection (50) reliée aux moyens de filtrage analytique (22), que l'unité de détection est à même de détecter la présence d'un signal auxiliaire dans un ou plusieurs des signaux de sous-bandes, de générer un signal de commande par détection du signal auxiliaire et d'appliquer le signal de commande à une sortie (54), que ladite sortie est reliée à une unité de signalisation (56) et que l'unité de signalisation est conçue pour signaler que le signal audio à enregistrer, lorsqu'un signal de commande est présent, est un signal audio contenant un signal auxiliaire.

16. Dispositif selon la revendication 14 ou 15, caractérisé en ce que le codeur comprend, en outre, des moyens de combinaison de signaux (26 S_1 à S_p) reliés aux moyens de filtrage analytique, les moyens de combinaison de signaux sont à même d'ajouter sélectivement (via 60) le signal auxiliaire, en l'absence de signal de commande, à un ou plusieurs des signaux de sous-bandes pour former P signaux de sous-bandes composites et d'appliquer lesdits P signaux de sous-bandes composites à P sorties, lesquelles sont couplées aux P entrées correspondantes de l'unité d'enregistrement (47')(Fig. 7).

17. Dispositif selon la revendication 14 ou 15, caractérisé en ce que le codeur comprend, en outre, des moyens de combinaison de signaux (26) reliés aux moyens de filtrage analytique (22), que les moyens de combinaison de signaux sont à même d'ajouter le signal auxiliaire, en l'absence du signal de commande, à un ou plusieurs des signaux de sous-bandes pour former P signaux de sous-bandes composites et d'appliquer lesdits P signaux de sous-bandes composites à P sorties, lesquelles sont couplées aux P entrées correspondantes de l'unité d'enregistrement (Fig. 8).

18. Dispositif selon la revendication 14, caractérisé en ce que le codeur fait partie d'un codeur selon l'une quelconque des revendications 1 à 9.

19. Support d'enregistrement sur lequel un signal audionumérique a été enregistré à l'aide d'un dispositif selon l'une quelconque des revendications 13, 16, 17 ou 18, caractérisé en ce que le signal audio est divisé en P signaux de sous-bandes et que le signal audio est combiné avec un signal auxiliaire dans une ou plusieurs de sous-bandes de manière à obtenir P signaux de sous-bandes composites enregistrés sur le support d'enregistrement (48) et que le signal auxiliaire est sélectionné de telle manière qu'au cours de la reproduction du signal audio composite enregistré sur le support d'enregistrement via un dispositif à haut-parleur, ledit signal auxiliaire soit sensiblement imperceptible à un auditeur.

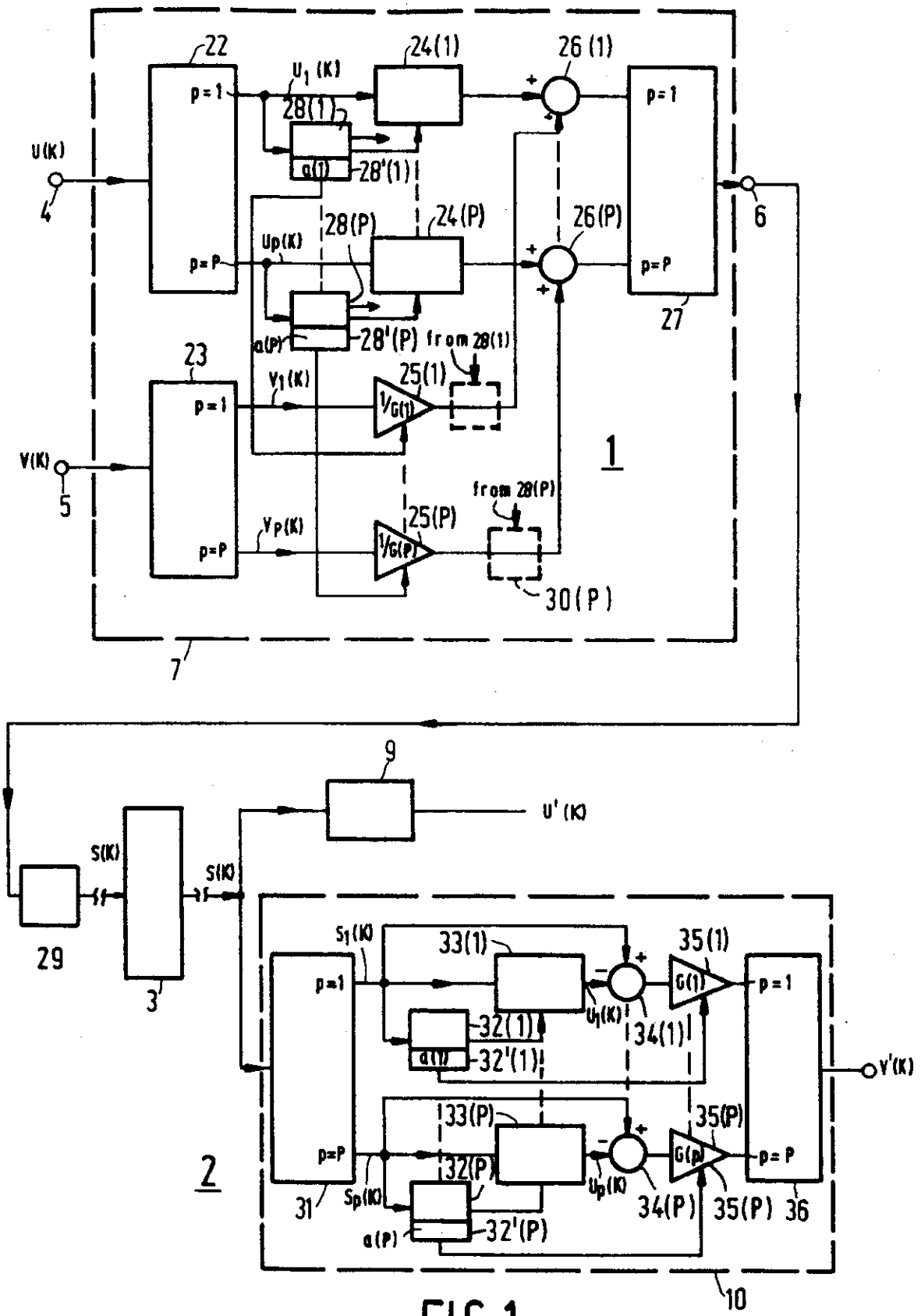
22
24(1)
26 (1)
U1 (K)
p=1
28(1)
U(K)
a(1)
28'(1)
4
6
28(P)
24(P)
26(P)
Up(K)
p=P
p=P
27
a(P)
28'(P)
from 28(1)
23
V1(K)
25(1)
p=1
1/G(1)
1
V(K)
5
from 28(P)
25(P)
VP(K)
p=P
1/G(P)
30(P)
7
9
U'(K)
S(K)
S(K)
29
3
S1(K)
33(1)
35(1)
p=1
G(1)
p=1
U1(K)
32(1)
34(1)
a(1)
32'(1)
V'(K)
33(P)
35(P)
p=P
G(p)
p=P
32(P)
2
31
Sp(K)
Up(K)
34(P)
35(P)
36
a(P)
32'(P)
10

FIG.1

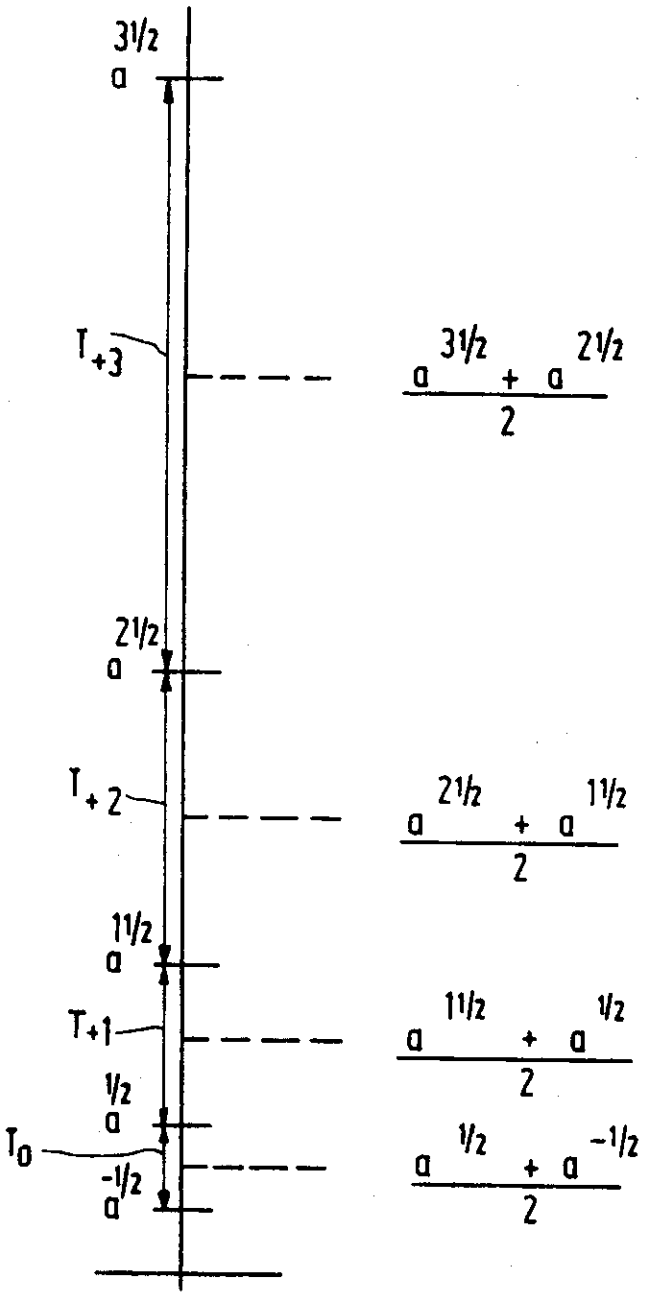

FIG. 2

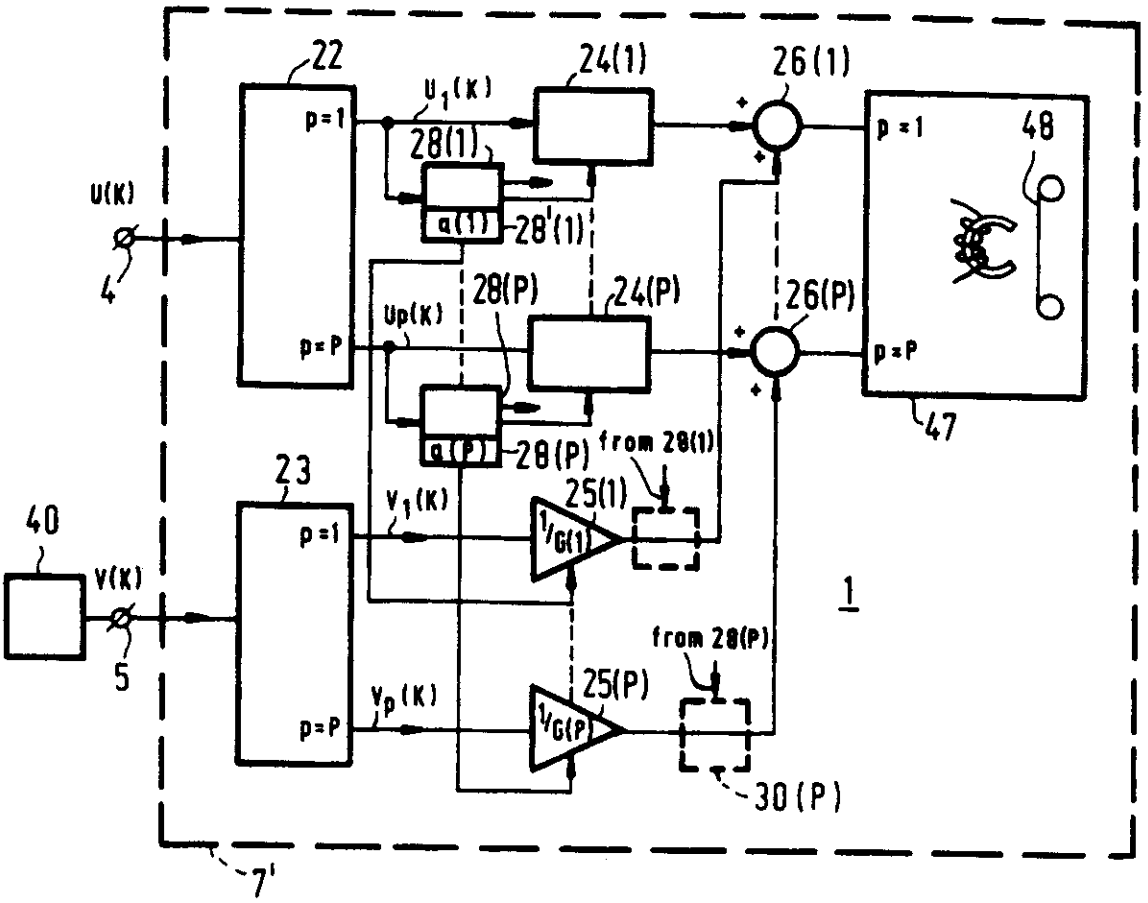
22
p=1
p=P
U(K)
4
U1(K)
28(1)
q(1)
28'(1)
24(1)
26(1)
p=1
48
p=P
47
Up(K)
28(P)
q(P)
28(P)
24(P)
26(P)
from 28(1)
23
40
V(K)
5
V1(K)
25(1)
1/G(1)
1
from 28(P)
Vp(K)
25(P)
1/G(P)
30(P)
7'

FIG.3

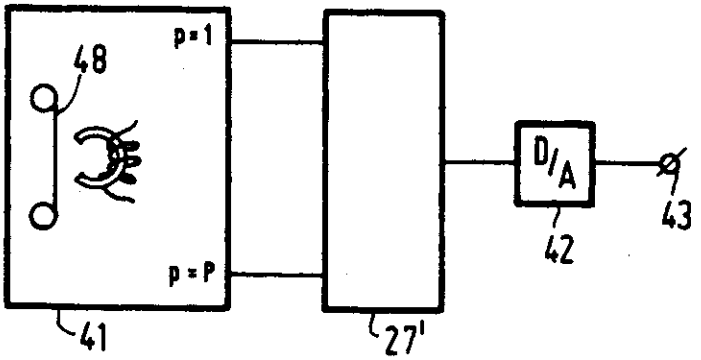
48
p=1
p=P
41
27'
D/A
42
43

FIG.4

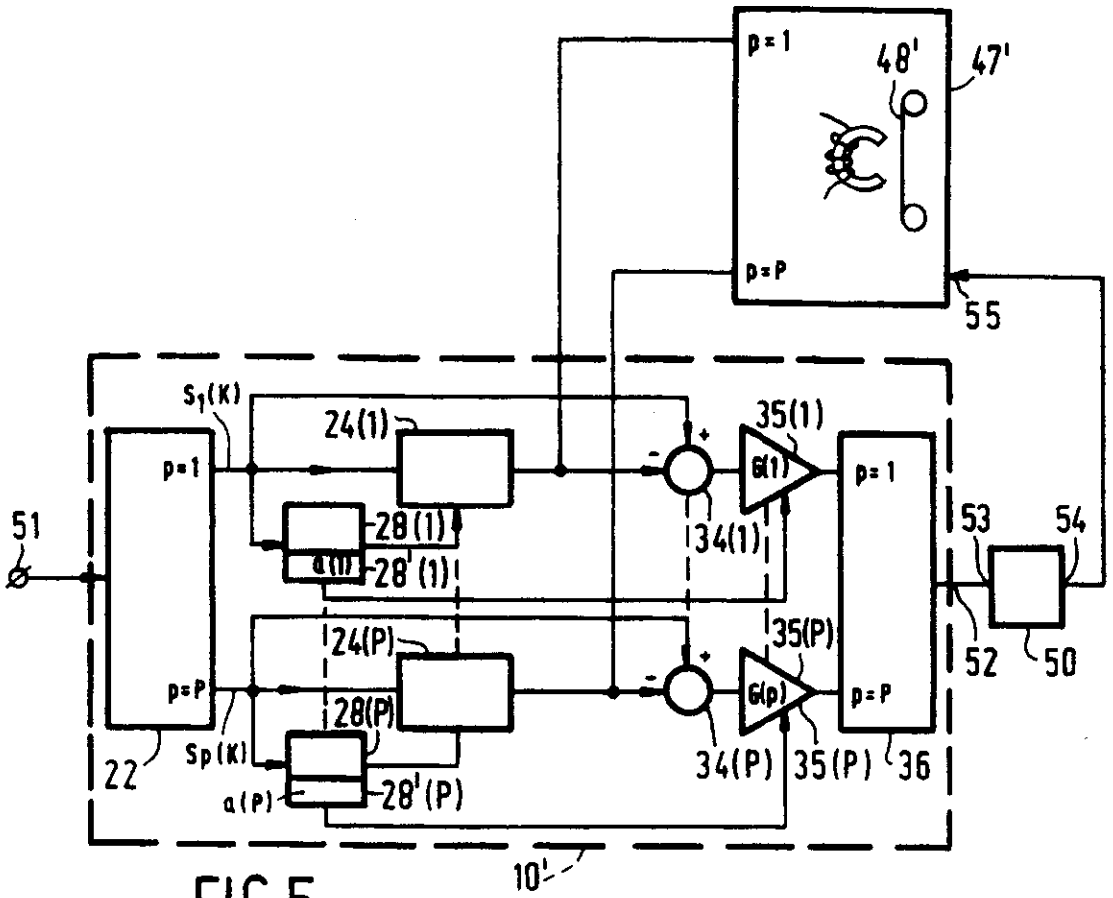
p = 1
48'
47'
p = P
55
S1(K)
24(1)
35(1)
G(1)
p = 1
51
28(1)
q(1)
28'(1)
34(1)
53
54
24(P)
35(P)
p = P
28(P)
G(p)
52
50
22
Sp(K)
34(P)
35(P)
36
q(P)
28'(P)
10'

FIG.5

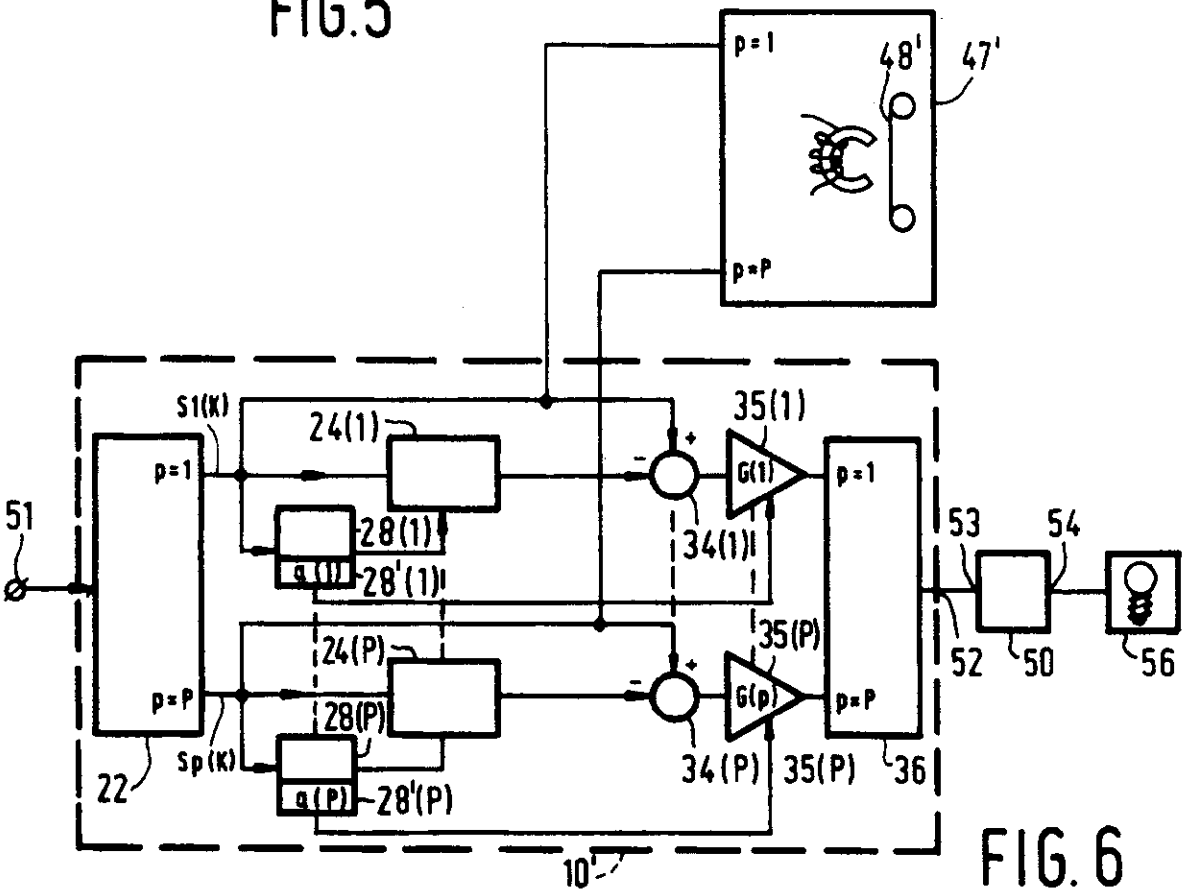
p = 1
48'
47'
p = P
S1(K)
24(1)
35(1)
G(1)
p = 1
51
28(1)
q(1)
28'(1)
34(1)
53
54
24(P)
35(P)
p = P
28(P)
G(p)
52
50
56
22
Sp(K)
34(P)
35(P)
36
q(P)
28'(P)
10'

FIG.6

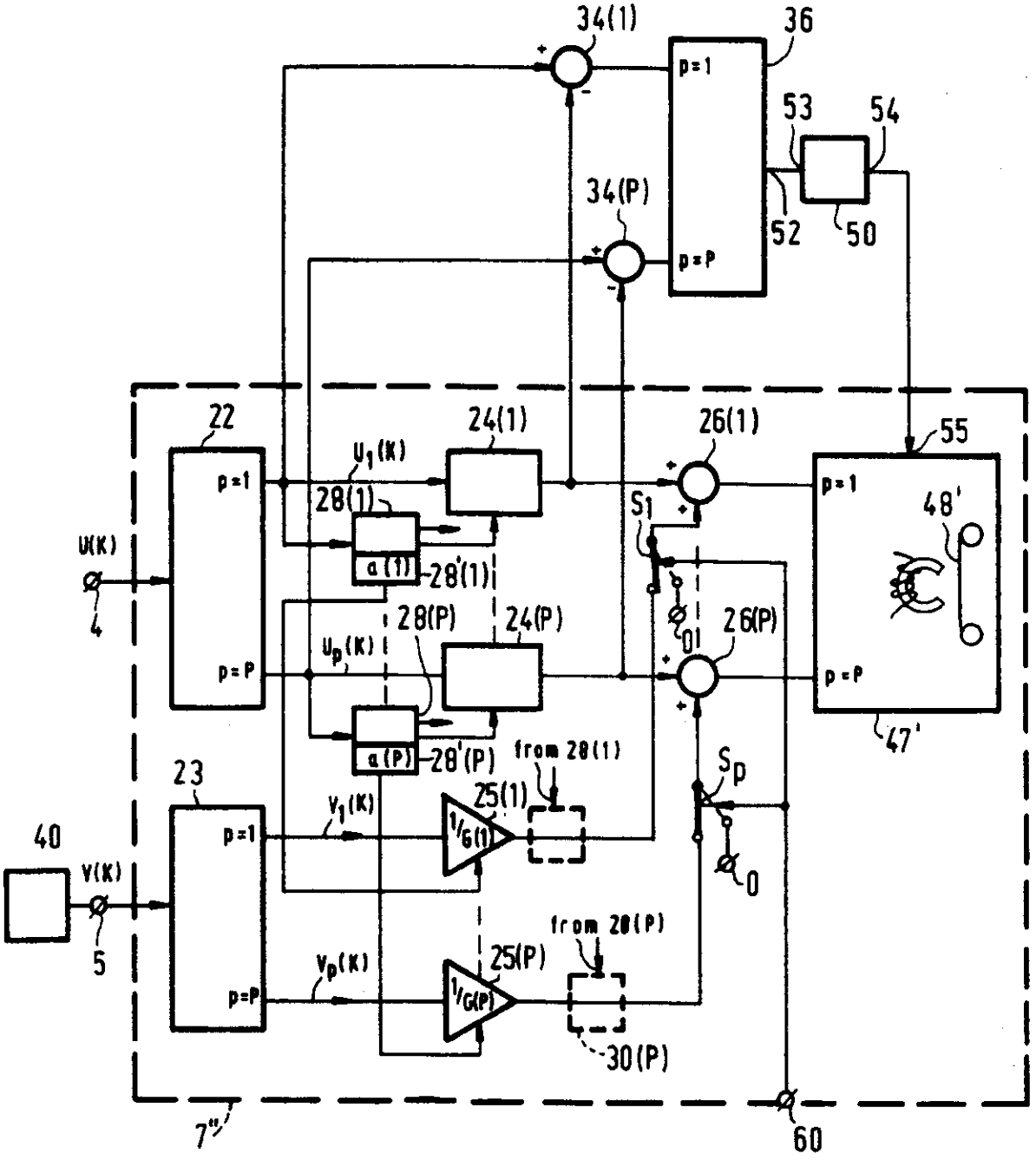
34(1)
36
p=1
53
54
34(P)
52
50
p=P
22
24(1)
26(1)
55
U(K)
4
$U_1(K)$
28(1)
a(1)
28'(1)
S1
p=1
48'
28(P)
24(P)
$U_p(K)$
26(P)
01
a(P)
28'(P)
p=P
47'
from 28(1)
Sp
23
$V_1(K)$
Z5(1)
1/G(1)
40
V(K)
5
0
from 28(P)
$V_p(K)$
25(P)
1/G(P)
30(P)
7''
60

FIG.7

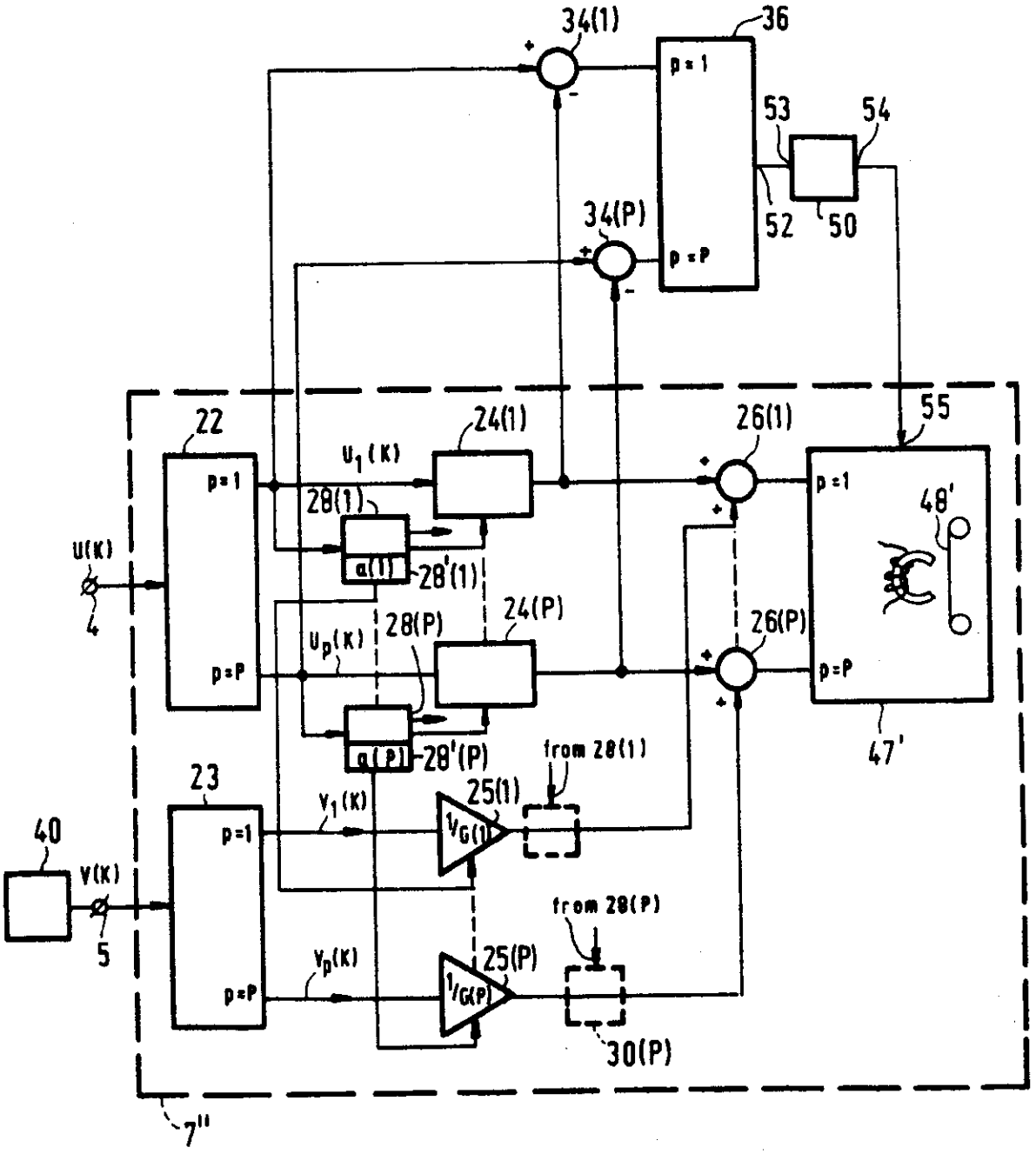
34(1)
36
p = 1
53
54
34(P)
52
50
p = P
22
24(1)
26(1)
55
$U_1(K)$
p = 1
28(1)
48'
U(K)
4
a(1)
28'(1)
24(P)
28(P)
26(P)
$U_p(K)$
p = P
a(P)
28'(P)
47'
from 28(1)
23
$V_1(K)$
25(1)
40
p = 1
V(K)
5
from 28(P)
$V_p(K)$
25(P)
p = P
30(P)
7''

FIG.8

REGISTER ENTRY FOR EP0372601

European Application No EP89202823.4 filing date 08.11.1989

Priorities claimed:
10.11.1988 in Netherlands - doc: 8802769
25.04.1989 in Netherlands - doc: 8901032

Designated States BE DE ES FR GB IT SE AT

Title CODER FOR INCORPORATING EXTRA INFORMATION IN A DIGITAL AUDIO SIGNAL HAVING A PREDETERMINED FORMAT, DECODER FOR EXTRACTING SUCH EXTRA INFORMATION FROM A DIGITA

Applicant/Proprietor
N.V. PHILIPS' GLOEILAMPENFABRIEKEN, Groenewoudseweg 1, NL-5621 BA Eindhoven, Netherlands [ADP No. 50311273001]

Inventors
WILLEM FREDERIK DRUYVESTEYN, c/o INT. OCTROOIBUREAU B.V. Prof. Holstlaan 6, NL-5656 AA Eindhoven, Netherlands [ADP No. 53107967001]

ABRAHAM HOOGENDOORN, c/o INT. OCTROOIBUREAU B.V. Prof. Holstlaan 6, NL-5656 AA Eindhoven, Netherlands [ADP No. 57528283001]

LEON MARIA VAN DE KERKHOF, c/o INT. OCTROOIBUREAU B.V. Prof. Holstlaan 6, NL-5656 AA Eindhoven, Netherlands [ADP No. 57528291001]

RAYMOND NICOLAAS JOHAN VELDHUIS, c/o INT. OCTROOIBUREAU B.V. Prof. Holstlaan 6, NL-5656 AA Eindhoven, Netherlands [ADP No. 53431474001]

Classified to
H04B

Address for Service
R J BOXALL, PHILIPS ELECTRONICS, Patents and Trade Marks Department, Cross Oak Lane, REDHILL, Surrey, RH1 5HA, United Kingdom [ADP No. 00974790007]

EPO Representative
WILLEM LEONARDUS VAN DER KRUK, INTERNATIONAAL OCTROOIBUREAU B.V. Prof. Holstlaan 6, NL-5656 AA Eindhoven, Netherlands [ADP No. 50448802001]

Publication No EP0372601 dated 13.06.1990
Publication in English

Examination requested 11.12.1990

Patent Granted with effect from 22.02.1995 (Section 25(1)) with title CODER FOR INCORPORATING EXTRA INFORMATION IN A DIGITAL AUDIO SIGNAL HAVING A PREDETERMINED FORMAT, DECODER FOR EXTRACTING SUCH EXTRA INFORMATION FROM A DIGITA

Title TO

15.05.1990 A publication Title truncated by UK Office - for full Title see EPO Bulletin.

Entry Type 10.1 Staff ID. TH2 Auth ID. EPT

20.01.1995 Title truncated for publication date 22.02.1995 by UK Patent Office. See below for full title. Coder for incorporating extra information in a digital audio signal having a predetermined format, decoder for extracting such extra information from a digital signal, device for recording a digital signal on a record carrier, comprising such a coder, and record carrier obtained by means of such a device.

Entry Type 25.18 Staff ID. Auth ID. EPT

03.11.1995 Change of Applicant/Proprietor details to:-
PHILIPS ELECTRONICS N.V., Groenewoudseweg 1, NL-5621 BA Eindhoven, Netherlands [ADP No. 06828487001]
notified to the EPO prior to grant. Evidence filed on 0523777

Entry Type 10.1 Staff ID. SB2 Auth ID. AO

**** END OF REGISTER ENTRY ****

RENEWAL DETAILS

PUBLICATION NUMBER EP0372601

PROPRIETOR(S)

Philips Electronics N.V., Incorporated in the Netherlands,
Groenewoudseweg 1, NL-5621 BA Eindhoven, Netherlands

DATE FILED 08.11.1989

DATE GRANTED 22.02.1995

DATE NEXT RENEWAL DUE 08.11.1996

DATE NOT IN FORCE

DATE OF LAST RENEWAL 01.11.1995

YEAR OF LAST RENEWAL 07

STATUS PATENT IN FORCE

**** END OF REPORT ****