(12) INTERNATIONAL APPLICATION PUBLISHED UNDER THE PATENT COOPERATION TREATY (PCT)

(19) World Intellectual Property Organization
International Bureau

(43) International Publication Date
12 January 2012 (12.01.2012)

PCT

(10) International Publication Number
WO 2012/006491 A1

(51) International Patent Classification:
A61B 17/04 (2006.01) *A61B 17/062* (2006.01)

(21) International Application Number:
PCT/US201 1/043299

(22) International Filing Date:
8 July 201 1 (08.07.201 1)

(25) Filing Language: English

(26) Publication Language: English

(30) Priority Data:
61/363,043 9 July 2010 (09.07.2010) US

(71) Applicant *(for all designated States except US):* **THE REGENTS OF THE UNIVERSITY OF MICHIGAN** [US/US]; Office Of Technology Transfer, 1214 S. University Ave., 2nd Floor, Ann Arbor, MI 48104-2592 (US).

(72) Inventor; and

(75) Inventor/Applicant *(for US only):* **COLESKI, Radoslav** [MK/US]; 753 Classon Ave., Apt. 7d, Brooklyn, NY 11238 (US).

(74) Agent: **CRAANE, Paul, C ;** Marshall, Gerstein & Borun Lip, 233 S. Wacker Drive, 6300 Willis Tower, Chicago, IL 60606-6357 (US).

(81) Designated States *(unless otherwise indicated, for every kind of national protection available):* AE, AG, AL, AM, AO, AT, AU, AZ, BA, BB, BG, BH, BR, BW, BY, BZ, CA, CH, CL, CN, CO, CR, CU, CZ, DE, DK, DM, DO, DZ, EC, EE, EG, ES, FI, GB, GD, GE, GH, GM, GT, HN, HR, HU, ID, IL, IN, IS, JP, KE, KG, KM, KN, KP, KR, KZ, LA, LC, LK, LR, LS, LT, LU, LY, MA, MD, ME, MG, MK, MN, MW, MX, MY, MZ, NA, NG, NI, NO, NZ, OM, PE, PG, PH, PL, PT, RO, RS, RU, SC, SD, SE, SG, SK, SL, SM, ST, SV, SY, TH, TJ, TM, TN, TR, TT, TZ, UA, UG, US, UZ, VC, VN, ZA, ZM, ZW.

(84) Designated States *(unless otherwise indicated, for every kind of regional protection available):* ARIPO (BW, GH, GM, KE, LR, LS, MW, MZ, NA, SD, SL, SZ, TZ, UG, ZM, ZW), Eurasian (AM, AZ, BY, KG, KZ, MD, RU, TJ, TM), European (AL, AT, BE, BG, CH, CY, CZ, DE, DK, EE, ES, FI, FR, GB, GR, HR, HU, IE, IS, IT, LT, LU, LV, MC, MK, MT, NL, NO, PL, PT, RO, RS, SE, SI, SK, SM, TR), OAPI (BF, BJ, CF, CG, CI, CM, GA, GN, GQ, GW, ML, MR, NE, SN, TD, TG).

Published:

— *with international search report (Art. 21(3))*

— *before the expiration of the time limit for amending the claims and to be republished in the event of receipt of amendments (Rule 48.2(h))*

(54) Title: SUTURING SYSTEM

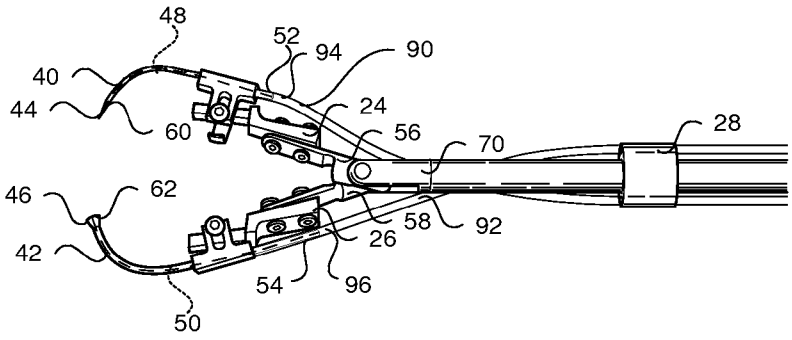

FIG. 2

(57) Abstract: A suturing system (20) includes first and second opposing jaws (24,26), at least one of the first and second jaws pivotally connected to permit first ends (40,42) of the first and second jaws to move between an open state wherein the first ends are spaced from each other and a closed state. Each of the first and second jaws has an opening (44,46) disposed at the first end and a passage (48,50) disposed within the jaw and connected to the opening. A handle (28) is attached to the first and second opposing jaws, and an actuator (30) is associated with the handle and attached to the first and second jaws, the actuator having an operating state corresponding to the open state of the first and second jaws and a relaxed state corresponding to the closed state. The system also includes a suture feeder (32) comprising a first passageway (90) connected to the passage in the first jaw and a second passageway connected to the passage in the second jaw.

WO 2012/006491 A1

SUTURING SYSTEM

Background

[0001] This patent is directed to a suturing system, and in particular to a suturing system for use in endoscopic procedures, for example.

[0002] Devices that facilitate or assist in suturing are known, as are devices that are used specifically to form sutures during an endoscopic procedure. However, existing devices may suffer from one or more drawbacks that make their use in endoscopic procedures problematic.

[0003] For example, certain existing endoscopic suturing devices lack the ability to form a full thickness suture, which is desirable and/or required according to certain procedures. Furthermore, existing devices may lack the appropriate size and mobility to be used in an endoscopic procedure. Moreover, certain existing devices utilize complicated mechanisms for suture placement and/or formation, such that the multiple, time-consuming steps required by such devices militate against their use. Finally, the design of the device and/or the design of the suture of certain existing devices may heighten the risk of injury to adjacent structures or organs during approximation of the defect, suture placement and/or suture formation.

Summary

[0004] According to an aspect of the present disclosure, a suturing system includes first and second opposing jaws, at least one of the first and second jaws pivotally connected to permit first ends of the first and second jaws to move between an open state wherein the first ends are spaced from each other and a closed state. Each of the first and second jaws has an opening disposed at the first end and a passage disposed within the jaw and connected to the opening. A handle is attached to the first and second opposing jaws, and an actuator is associated with the handle and attached to the first and second jaws, the actuator having an operating state corresponding to the open state of the first and second jaws and a relaxed state corresponding to the closed state. The system also includes a suture feeder comprising a first passageway connected to the passage in the first jaw and a second passageway connected to the passage in the second jaw.

[0005] According to another aspect of the present disclosure, a method of operating a suturing system includes closing first and second opposing jaws so that first ends of the first and second jaws are adjacent each other, and passing suture material through a first passage and a first opening in the first jaw and through a second opening and a second passageway in the second jaw. The method further includes opening the first and second opposing jaws to advance a portion of suture material from the first and second openings, closing the first and second opposing jaws, and rotating the jaws about an axis to close the portion of suture material.

Brief Description of the Drawings

[0006] It is believed that the disclosure will be more fully understood from the following description taken in conjunction with the accompanying drawings. Some of the figures may have been simplified by the omission of selected elements for the purpose of more clearly showing other elements. Such omissions of elements in some figures are not necessarily indicative of the presence or absence of particular elements in any of the exemplary embodiments, except as may be explicitly delineated in the corresponding written description. None of the drawings is necessarily to scale.

[0007] Fig. 1 is a perspective view of an endoscopic suturing device according to the present disclosure;

[0008] Fig. 2 is an enlarged perspective view of the opposing jaws of the endoscopic suturing device of Fig. 1, with the jaws in an open state;

[0009] Fig. 3 is an enlarged perspective view of the opposing jaws of the endoscopic suturing device of Fig. 1, with the jaws in a closed state;

[0010] Fig. 4 is a side view of another embodiment of an endoscopic suturing device with jaws offset from or set an angle relative to the handle axis;

[0011] Fig. 5 is a plan view of a still further embodiment of an endoscopic suturing device with jaws of unequal shape;

[0012] Fig. 6 is a plan, partially schematic view of an endoscopic suturing system according to a further embodiment, with the jaws in the closed state preliminary to positioning of the jaws;

[0013] Fig. 7 is a plan, partially schematic of the endoscopic suturing system of Fig. 6 with the jaws in the open state prior to penetration and approximation of the defect margins;

[0014] Fig. 8 is a plan, partially schematic view of the endoscopic suturing system of Fig. 6 with the jaws in a closed state and a guide wire and a length of suture material disposed through the jaws;

[0015] Fig. 9 is a plan, partially schematic view of the endoscopic suturing system of Fig. 6 with the jaws in a open state and the length of suture material disposed through the jaws preliminary to twisting of the suture material;

[0016] Fig. 10 is a plan, partially schematic view of the endoscopic suturing system of Fig. 6 with the jaws in a closed state after the suture material has been twisted to complete the suture;

[0017] Fig. 11 is a perspective of an endoscopic suturing system according to another embodiment with the jaws in an open state and a length of suture material already disposed through the system and the tissue; and

[0018] Fig. 12 is a perspective view of the system according to Fig. 11, with the jaws in a closed state and the suture material twisted to tighten and close off the suture material about the tissue.

Detailed Description of Various Embodiments

[0019] Although the following text sets forth a detailed description of numerous different embodiments of the invention, it should be understood that the legal scope of the invention is defined by the words of the claims set forth at the end of this patent. The detailed description is to be construed as exemplary only and does not describe every possible embodiment of the invention since describing every possible embodiment would be impractical, if not impossible. Numerous alternative embodiments could be implemented, using either current technology or technology developed after the filing date of this patent, which would still fall within the scope of the claims defining the invention.

[0020] It should also be understood that, unless a term is expressly defined in this patent using the sentence "As used herein, the term '_____' is hereby defined to mean..." or a similar sentence, there is no intent to limit the meaning of that term, either expressly or by implication, beyond its plain or ordinary meaning, and such term should not be interpreted to be limited in scope based on any statement made in any section of this patent (other than the language of the claims). Similarly, unless a claim element is defined by reciting the word "means" and a function without the recital of any structure, it is not intended that the scope of any claim element be

interpreted based on the application of 35 U.S.C. §112, sixth paragraph. Further, to the extent that any term recited in the claims at the end of this patent is referred to in this patent in a manner consistent with a single meaning, that is done for sake of clarity only so as to not confuse the reader, and it is not intended that such claim term be limited, by implication or otherwise, to that single meaning.

[0021] Along similar lines, certain conventions have been adopted regarding the spatial relationships of elements of the disclosed embodiments. In this regard, elements of the system further from the user have been termed "distal," while elements of the system closer to the user have been termed "proximal." This usage is for discussion purposes only, and is not intended to limit the invention set out in the claims.

[0022] Figs. 1-3 illustrate a first embodiment of an endoscopic suturing system 20. The system 20 may be used aside an endoscope. According to other embodiments of the system 20, the system 20 may be used through a large diameter endoscopic working channel.

[0023] Referring first to Fig. 1, the endoscopic suturing system 20 may include a device 22 with first and second opposing jaws 24, 26, a handle 28 attached to the first and second opposing jaws 24, 26, an actuator 30 associated with the handle 28 and attached to the first and second jaws 24, 26, and a suture feeder 32 connected to the first and second opposing jaws 24, 26. While the jaws 24, 26, handle 28, actuator 30, and feeder 32 are all elements of the device 22, they are equally elements of the system 20 as well.

[0024] At least one of the first and second jaws 24, 26 may be pivotally connected to permit first, or distal, ends 40, 42 of the first and second jaws 24, 26 to move relative to each other (see Figs. 2 and 3). As illustrated, the first and second jaws 24, 26 may both be pivotally connected to each other and to the handle 28 through the use a single pin, and may move relative to the handle 28 between the open and closed states (compare Figs. 2 and 3). The first and second jaws 24, 26 may move between at least an open state wherein the distal ends 40, 42 are spaced from each other (see Fig. 2), and a closed state (see Fig. 3). As illustrated in Fig. 3, the distal ends 40, 42 of the first and second jaws 24, 26 may abut each other in the closed state.

[0025] While an embodiment has been illustrated wherein the first and second jaws 24, 26 move (pivot) relative to each other as well as the handle 28, the disclosure includes embodiments wherein one of the first and second jaws 24, 26 does not move relative to the handle 28. According to such an embodiment, the first jaw 24, for example, may be fixedly attached or secured to the handle 28, while the other jaw 26 may be pivotally connected to the handle for movement relative thereto. It is believed that the illustrated embodiment, wherein both first and second jaws 24, 26 are capable of pivotal movement relative to each other and the handle 28, may provide a more suitable angle for the penetration of the margins of the defect to be sutured and better opportunities for approximation; however, it is also believed that fixedly attaching one of the jaws 24, 26 should provide an operable embodiment of the system 20 according to the present disclosure.

[0026] As illustrated in Fig. 2, each of the first and second jaws 24, 26 may have an opening 44, 46 disposed at the distal end 40, 42. Each of the first and second jaws 24, 26 may have a passage 48, 50 disposed within the jaw 24, 26 and connected to the distal opening 44, 46. As illustrated, the passage 48, 50 may terminate in an opening 52, 54 disposed between the distal end 40, 42 and a proximal end 56, 58 of the first and second jaws 24, 26. This opening 52, 54 may still be referred to as the proximal opening although not disposed at the proximal end 56, 58 of the jaws 24, 26.

[0027] According to the illustrated embodiment of Figs. 1-3, the first jaw 24 may be defined by an arcuate hollow needle with a sharp point 60 at the distal end 40. By contrast, the second jaw 26 may be defined by an arcuate hollow needle with a flared open end 62 at the distal end 42. The sharp point 60 may be disposed within the flared open end 62 when the jaws 24, 26 are in the closed state. The mating of the needle with a sharp point 60 and the flared open end 62 is believed to assist in the alignment of the openings 44, 46.

[0028] It will be recognized that other variants are possible relative to the ends 40, 42 of the jaws 24, 26. For example, both of the ends 40, 42 of the jaws 24, 26 may be defined by an arcuate hollow needle with a sharp point, such as is suggested in the embodiment illustrated in Figs. 6-10. Such an embodiment may present a more complicated issue of alignment relative to the openings 44, 46 that the embodiment illustrated in Figs. 1-3. However, an embodiment wherein both jaws are defined by arcuate hollow needles may present certain advantages relative to the penetration of

the margins of the defect when compared with an embodiment wherein one of the jaws is defined with a flared, relatively blunt, open end.

[0029] It will also be recognized that other variations are possible relative to the first and second jaws 24, 26, which variations may be used in combination with the jaws as illustrated or the variants disclosed above, or in various combinations wherein two or more of the following variations are used together. As one example of a further variation or modification, the jaws 24, 26 may be attached at an offset to or at different angles relative to the handle 28, as illustrated in Fig. 4. In addition, the diameter of the jaws 24, 26, and in particular the hollow needles, may vary relative to those illustrated, as may the length of the jaws 24, 26 between the distal ends 40, 42 and proximal ends 56, 58, or the curvature of the jaws 24, 26. Moreover, the jaws 24, 26 may have a different shape from the semi-circular shape illustrated in the figures; for example, in Fig. 5, one of the jaws has a semicircular shape while the other jaw has a first section that is straight and a second section that is arcuate or curved (according to certain embodiments, it may be semi-circular). It will also be recognized relative to the embodiment of Fig. 5 that the jaws need not be of relatively equal size and shape, but that one jaw may be larger (e.g., greater arc length) than the other jaw. Any of these variations may better accommodate positioning the device relative to the defect to be sutured, approximating the defect, or some other step in the suturing process, as disclosed below.

[0030] Moving from the jaws 24, 26 to the handle 28, the handle 28 may have a first, or distal, end 70 attached to the first and second opposing jaws 24, 26 and a second, or proximal, end 72. To facilitate use of the system 20 in endoscopic procedures, for example, the handle 28 may be flexible. The handle 28 has a longitudinal axis 74 (see Fig. 1), and the system 20 is rotatable about the longitudinal axis 74.

[0031] It should be noted that the longitudinal axis 74 of the system 20 appears straight as illustrated. It will be recognized that where the handle 28 is flexible, the axis 74 need not remain straight at all times, and may in fact have one or more inflection points where the line of the axis curves. Despite such bending or curving, the axis 74 shall still be referred to as an "axis" herein.

[0032] The actuator 30 may have an operating state corresponding to the open state of the first and second jaws 24, 26 and a relaxed state corresponding to the

closed state. According to the illustrated embodiment, the actuator 30 may be a scissor-type grip 80 connected to the second end 56, 58 of each of the first and second jaws 24, 26 by cables. However, it will also be recognized that the actuator 30 may instead be defined by a slider, which slider may be attached to one or both of the cables, instead of the illustrated scissor-type grip 80 because of the space requirements typically imposed on instruments designed for use in endoscopic procedures.

[0033] According to the illustrated embodiment of Figs. 1-3, the suture feeder 32 may include a first passageway 90 connected to the passage 48 in the first jaw 24, and a second passageway 92 connected to the passage 50 in the second jaw 26. Each of the first and second passageways 90, 92 may extend between the distal and proximal ends 70, 72 of the handle 28. The first and second passageways 90, 92 each may have an end 94, 96 (a distal end) coupled to one of the first and second jaws 24, 26.

[0034] According to the embodiment illustrated, the first and second passageways 90, 92 are defined by a length of flexible tubing. This flexible tubing is then secured at various points along the handle 28 with bands, to limit the chances that the passageways 90, 92 will become entangled or serve as an obstruction. However, it will be recognized that the passageways 90, 92 may be defined by other structures as well, at least over a substantial portion of the length of the handle 28. For example, the handle 28 may be formed with at least two lumens disposed within the outer surface of the handle, one of which serves to define at least a portion of the first passageway 90 and another of which serves to define at least a portion of the second passageway 90.

[0035] Additionally, according to the embodiment illustrated, the first and second passageways 90, 92 are enclosed continuously between the distal ends 94, 96 and proximal ends. It will be recognized that continuously enclosed passageways 90, 92 facilitate the guidance of the suturing material to the jaws 24, 26, and limit the exposure of the suturing material disposed through the passageways 90, 92, as well as to the passageways 90, 92 themselves, to contaminants external to the system 20. However, it will also be recognized that the passageways 90, 92 need not be continuously enclosed according to all embodiments of the present disclosure; for example, the passageways 90, 92 may have short lengths that are open along the length of the passageway 90, 92.

[0036] As seen in Fig. 6, the system 20 may also include a length of suture material 100. According to certain embodiments, the length of suture material 100 may be defined by a length of wire. According to still other embodiments, the length of suture material 100 may have a leading end 102 and a trailing end 104, and a guide wire 106 may be attached to the leading end 102 of the length of suture material 100, thereby defining a hybrid wire. The guide wire 106 may be kink-resistant, and yet sufficiently flexible to permit the guide wire 106 to be advanced as explained in detail below; the wire 106 may be made from, for example, nickel-titanium (or nitinol) wire. On the other hand, the wire of the suture material 100 may be flexible and may not be kink-resistant (i.e., may be kinkable), permitting the material 100 to be bent during suture formation and tightening, as explained below. The length of suture material 100 (and the guide wire 106, when included) is disposed through the first passageway 90, the passage 48 in the first jaw 24, the opening 44 in the first jaw 24, the opening 46 in the second jaw 26, the passage 50 in the second jaw 26, and the second passageway 92. Consequently, the suture material 100 traverses both free defect margins.

[0037] The suture feeder 32 may also include additional components as well. For example, it will be recognized that the suture material 100 may be fed through the passageways 90, 92 manually. Alternatively, the suture feeder 32 may incorporate a motor (such as a nanomotor) and associated components to automate the movement of the suture material 100 into and then along the passages 48, 50 and passageways 90, 92. Automated feeding of the suture material 100 along the passages 48, 50 and passageways 90, 92 may be desired to simplify the overall use of the system 20. In addition, the automated feeding of the wire may permit the passageways 90, 92 to be considerably shorter than those illustrated, as the nanomotor and other components may be disposed close to the jaws 24, 26, which positioning may further facilitate the design of the device to permit its use inside an endoscope.

[0038] The operation of the system 20 is now discussed relative to Figs. 6-10. While certain aspects of the device 22 have been modified, simplified or removed to better illustrate the system, this should not suggest that such modifications, simplifications or removals affect the above discussion unless particularly mentioned. For example, while the passageways 90, 92 are illustrated as being parallel to the handle 28, and running for only a portion of the handle 28, it will be recognized that

in accordance with the discussion above, the passageways would typically be secured to the handle 28 (if not formed as part of the handle 28) and may run substantially the length of the handle between distal and proximal ends 70, 72.

[0039] As illustrated in Fig. 6, the device 22 would be advanced into a body of a patient with the jaws 24, 26 initially in a closed state, with the distal ends 40, 42 abutting. As further illustrated in Figs. 7 and 8, the actuator 30 may be used to control the movement of the jaws 24, 26 between the open and closed states, thereby enabling tissue margin penetration (by the ends 40, 42 of the jaws 24, 26) and approximation. With the tissue approximated, the jaws 24, 26 are moved to their closed state, as illustrated in Fig. 8.

[0040] With the jaws 24, 26 in their closed state in Fig. 8, the guide wire 106 and the suture material 100 are passed through the openings 44, 46, the passages 48, 50 and the passageways 90, 92. According to certain embodiments, once the guide wire 106 has passed through the passageway 92, the device 22 is ready to tighten and close the suture material 100. Preliminary to the tightening and closure action, the jaws 24, 26 are moved to the open state, and the device 22 is moved away from the defect at issue. The opening of the jaws 24, 26 and the movement of the device 22 exposes a portion 110 of the suture material 100 while traversing the margins of the defect, as illustrated in Fig. 9.

[0041] As illustrated in Fig. 10, the device 22 may then be rotated about the longitudinal axis 74 of the device 22 one or more times. It will be recognized that the number of rotations is related to the tightness of the resulting suture. Rotation of the device 22 produces a helix 112 from the ends of the portion 110 of the suture material 100. The portion 110 (thus defining a suture) may then be cut from the remainder of the suture material 100 proximal to the helix, using endoscopic scissors for example, whereupon the procedure may be repeated as required.

[0042] Figs. 11 and 12 illustrate an additional embodiment of the device 22', which a slightly different construction relative to the jaws 24', 26'. Given the similarities of the devices 22, 22', similar portions of the similar devices are identified using similar reference numbers, differentiated with a prime. Figs. 11 and 12, illustrate the actions of exposing portion 110' of the suture material 100' while traversing the margins of the defect, and the rotation of the device 22' to produce the helix 112' prior to cutting off the fully formed suture.

[0043] It will also be recognized that further alternatives and variants to the above-mentioned embodiment are also possible.

[0044] In regard to potential applications of the system 20, it will be recognized that the system 20 may be used for endoscopic intraluminal approximation and full thickness suturing of gastrointestinal wall defects. For instance, the system 20 may be used for nonsurgical repair of full thickness wall defects caused by disease or endoscopic complications. The system 20 may also be used for wall reconstruction post full thickness endoscopic resection of various pathological lesions, for treatment of obesity (through approximation of the stomach walls and volume decrease to produce early postprandial satiety), and for attachment of devices to the stomach mucosa. The system 20 may also be useful in natural orifice transluminal endoscopic surgery (NOTES).

[0045] As will be recognized, the devices according to the present disclosure may have one or more advantages relative to conventional technology, any one or more of which may be present in a particular embodiment in accordance with the features of the present disclosure included in that embodiment. For instance, the design of the system described above may permit better operator control and a less time-consuming suturing process. Furthermore, the design of the system and its operation permits a reduced depth of penetration, as well as an application of force at an acute angle, both of which are believed to reduce the risk of injury to adjacent tissue, structures and/or organs. Moreover, the device permits the formation of full thickness sutures. Other advantages not specifically listed herein may also be recognized as well.

We claim:

1. A suturing system comprising:

first and second opposing jaws, at least one of the first and second jaws pivotally connected to permit first ends of the first and second jaws to move between an open state wherein the first ends are spaced from each other and a closed state,

each of the first and second jaws having an opening disposed at the first end and a passage disposed within the jaw and connected to the opening;

a handle attached to the first and second opposing jaws;

an actuator associated with the handle and attached to the first and second jaws, the actuator having an operating state corresponding to the open state of the first and second jaws and a relaxed state corresponding to the closed state; and

a suture feeder comprising a first passageway connected to the passage in the first jaw and a second passageway connected to the passage in the second jaw.

2. The system of claim 1, wherein the first and second opposing jaws are both pivotally connected to the handle to move relative to the handle between the open and closed states.

3. The system of claims 1 or 2, wherein the first jaw comprises an arcuate hollow needle with a sharp point at the first end, and the second jaw comprises an arcuate hollow needle with a flared open end at the first end, the sharp point disposed within the flared open end when the jaws are in the closed state.

4. The system of claims 1 or 2, wherein the first and second jaws each comprise an arcuate hollow needle with a sharp point at the first end.

5. The system of any one of the preceding claims, wherein the handle has a first end attached to the first and second opposing jaws and a second end, and each

of the first and second passageways extends between the first and second ends of the handle.

6. The system of any one of the preceding claims, wherein the first and second passageways each comprise a length of flexible tubing having an end coupled to one of the first and second jaws.

7. The system of any one of the preceding claims, wherein the handle is flexible.

8. The system of any one of the preceding claims, wherein the handle comprises a longitudinal axis, and the system is rotatable about the longitudinal axis.

9. The system of any one of the preceding claims, wherein the actuator comprises a scissor-type grip connected to a second end of each of the first and second jaws by a cable.

10. The system of any one of the preceding claims, comprising a length of suture material disposed through the first passageway, the passage in the first jaw, the opening in the first jaw, the opening in the second jaw, the passage in the second jaw, and the second passageway.

11. The system of claim 10, wherein the length of suture material comprises a wire.

12. The system of claim 11, wherein the length of suture material has a leading end and a trailing end, and comprising a guide wire attached to the leading end of the length of suture material, the length of suture material being flexible and kinkable and the guide wire being flexible and kink-resistant.

13. A method of operating a suturing system comprising:

closing first and second opposing jaws so that first ends of the first and second jaws are adjacent each other;

passing suture material through a first passage and a first opening in the first jaw and through a second opening and a second passageway in the second jaw;

opening the first and second opposing jaws to advance a portion of suture material from the first and second openings;

closing the first and second opposing jaws; and

rotating the jaws about an axis to close the portion of suture material.

14. The method according to claim 13, comprising:

operating an actuator disposed remotely of and attached to the first and second jaws to open and close the first and second jaws.

15. The method according to claim 13 or 14, wherein:

the suture material comprises a length of suture material having a leading end and a trailing end, the length of suture material comprising a guide wire attached to the leading end of the length of suture material, the length of suture material being flexible and kinkable and the guide wire being flexible and kink-resistant.

16. The method according to any one of claims 13 to 15, comprising:

cutting off the portion of suture material after closing the portion of suture material.

17. The method according to any one of claims 13 to 16, comprising:

withdrawing the first and second opposing jaws after opening the first and second opposing jaws open to advance a portion of suture material from the first and second openings, but before closing the first and second opposing jaws.

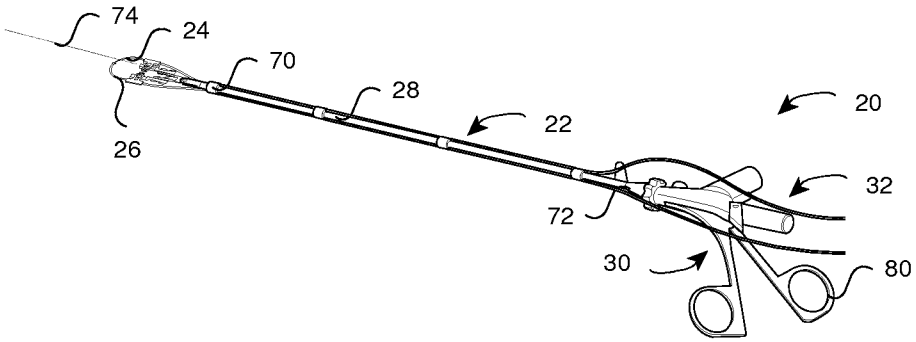

FIG. 1

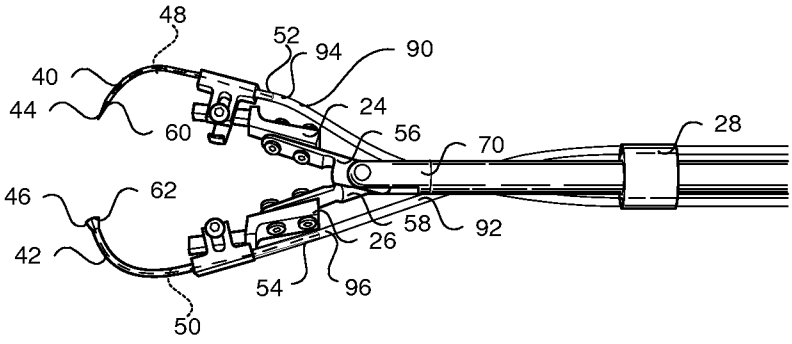

FIG. 2

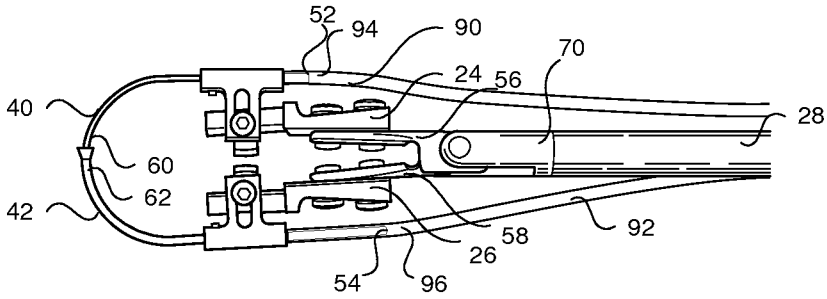

FIG. 3

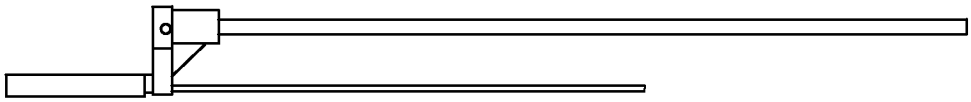

FIG. 4

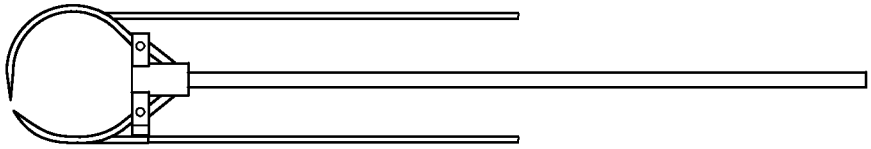

FIG. 5

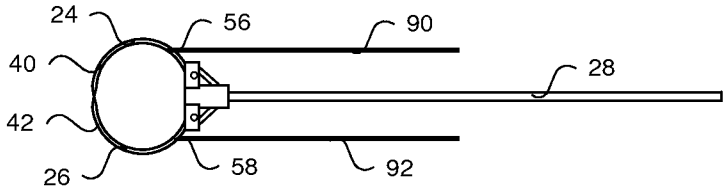

FIG. 6

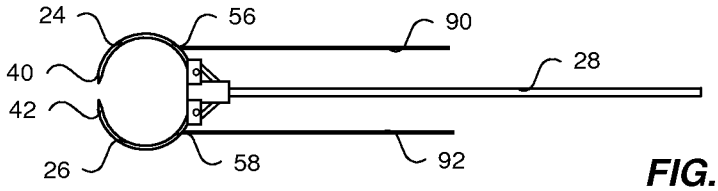

FIG. 7

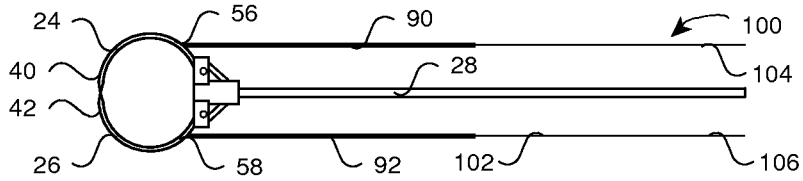

FIG. 8

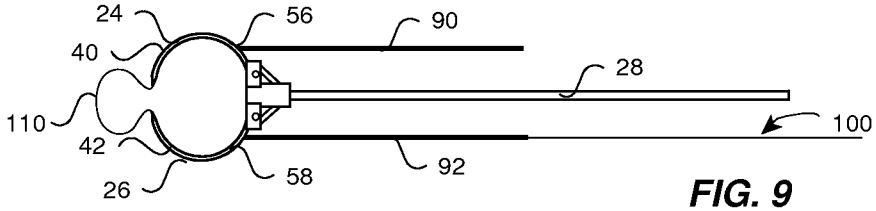

FIG. 9

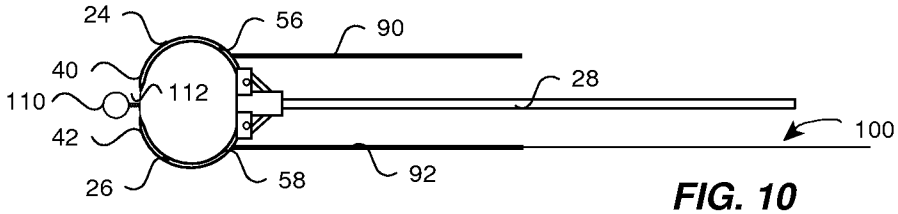

FIG. 10

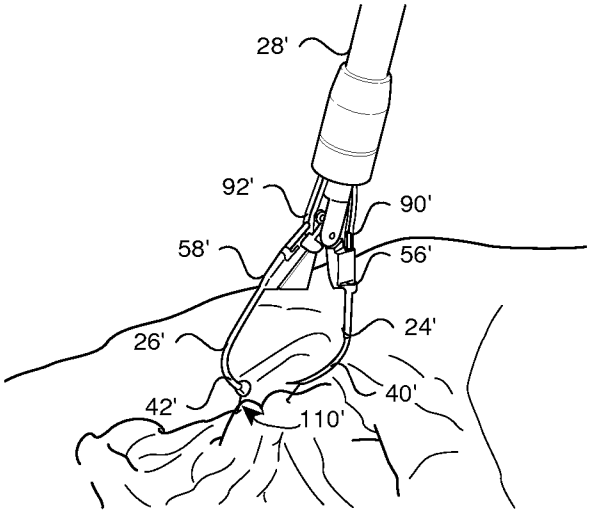

FIG. 11

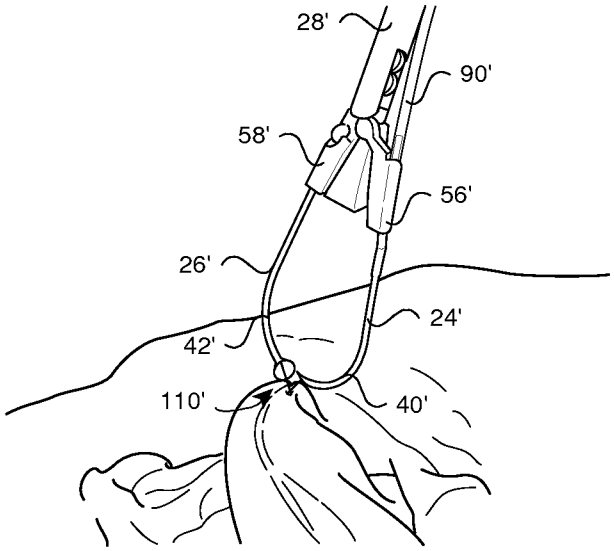

FIG. 12

INTERNATIONAL SEARCH REPORT

International application No
PCT/US2011/043299

A. CLASSIFICATION OF SUBJECT MATTER
INV. A61B17/04 A61B17/062
ADD.

According to International Patent Classification (IPC) or to both national classification and IPC

B. FIELDS SEARCHED

Minimum documentation searched (classification system followed by classification symbols)
A61B

Documentation searched other than minimum documentation to the extent that such documents are included in the fields searched

Electronic data base consulted during the international search (name of data base and, where practical, search terms used)
EPO-Internal

C. DOCUMENTS CONSIDERED TO BE RELEVANT

Category*	Citation of document, with indication, where appropriate, of the relevant passages	Relevant to claim No.
X	US 4 935 027 A (YOON INBAE [US]) 19 June 1990 (1990-06-19)	1-11
Y	column 3 - column 5; figures 1,1B,2A	12

X	GB 2 437 368 A (ARAFA KHALED AFIFI [GB]) 24 October 2007 (2007-10-24)	1-12
Y	figures 1,3,4,6	12

X	WO 96/25109 A1 (EGAN THOMAS D [US]) 22 August 1996 (1996-08-22) figures 1A,2,3A	1-11

X	US 7 232 446 B1 (FARRIS ALEX F [US]) 19 June 2007 (2007-06-19) column 4 - column 7; figures 2,4,5,9,10	1,2,5-11

	-/- .	

[X] Further documents are listed in the continuation of Box C.

[X] See patent family annex.

* Special categories of cited documents :

"A" document defining the general state of the art which is not considered to be of particular relevance

"E" earlier document but published on or after the international filing date

"L" documentwhich may throw doubts on priority claim(s) or which is cited to establish the publication date of another citation or other special reason (as specified)

"O" document referring to an oral disclosure, use, exhibition or other means

"P" document published prior to the international filing date but later than the priority date claimed

"T" later document published after the international filing date or priority date and not in conflict with the application but cited to understand the principle or theory underlying the invention

"X" document of particular relevance; the claimed invention cannot be considered novel or cannot be considered to involve an inventive step when the document is taken alone

"Y" document of particular relevance; the claimed invention cannot be considered to involve an inventive step when the document is combined with one or more other such docu¬ments, such combination being obvious to a person skilled in the art.

"&" document member of the same patent family

Date of the actual completion of the international search	Date of mailing of the international search report
8 November 2011	16/11/2011

Name and mailing address of the ISA/	Authorized officer
European Patent Office, P.B. 5818 Patentlaan 2 NL - 2280 HV Rijswijk Tel. (+31-70) 340-2040, Fax: (+31-70) 340-3016	Assi on, Jean-Charl es

1

Form PCT/ISA/210 (second sheet) (April 2005)

INTERNATIONAL SEARCH REPORT

International application No.
PCT/US2011/043299

Box No. II Observations where certain claims were found unsearchable (Continuation of item 2 of first sheet)

This international search report has not been established in respect of certain claims under Article 17(2)(a) for the following reasons:

1. [X] Claims Nos.: 13-17
because they relate to subject matter not required to be searched by this Authority, namely:

Rule 39.1(iv) PCT - Method for treatment of the human or animal body by surgeryRule 39.1(iv) PCT - Method for treatment of the human or animal body by therapy

2. [ ] Claims Nos.:
because they relate to parts of the international application that do not comply with the prescribed requirements to such an extent that no meaningful international search can be carried out, specifically:

3. [ ] Claims Nos.:
because they are dependent claims and are not drafted in accordance with the second and third sentences of Rule 6.4(a).

Box No. III Observations where unity of invention is lacking (Continuation of item 3 of first sheet)

This International Searching Authority found multiple inventions in this international application, as follows:

1. [ ] As all required additional search fees were timely paid by the applicant, this international search report covers all searchable claims.

2. [ ] As all searchable claims could be searched without effort justifying an additional fees, this Authority did not invite payment of additional fees.

3. [ ] As only some of the required additional search fees were timely paid by the applicant, this international search report covers only those claims for which fees were paid, specifically claims Nos. :

4. [ ] No required additional search fees were timely paid by the applicant. Consequently, this international search report is restricted to the invention first mentioned in the claims; it is covered by claims Nos. :

Remark on Protest

[ ] The additional search fees were accompanied by the applicant's protest and, where applicable, the payment of a protest fee.

[ ] The additional search fees were accompanied by the applicant's protest but the applicable protest fee was not paid within the time limit specified in the invitation.

[ ] No protest accompanied the payment of additional search fees.

C(Continuation). DOCUMENTS CONSIDERED TO BE RELEVANT

Category*	Citation of document, with indication, where appropriate, of the relevant passages	Relevant to claim No.
X	WO 01/72206 A2 (ONUX MEDICAL INC [US]) 4 October 2001 (2001-10-04) figures 14, 15 , 17c, 17f	1,2,7-11
A	GB 2 214 814 A (BIO MEDICAL ENG [GB]) 13 September 1989 (1989-09-13) abstract; figure 1	1
A	US 5 989 268 A (PUGSLEY JR CHARLES H [US] ET AL) 23 November 1999 (1999-11-23) figures 3A-3C	1-4,11, 12

1

INTERNATIONAL SEARCH REPORT

Information on patent family members

International application No
PCT/US2011/043299

Patent document cited in search report	Publication date	Patent family member(s)	Publication date
US 4935027 A	19-06-1990	CA 2042596 A1	22-02-1991
		US 4935027 A	19-06-1990
		WO 9102490 A1	07-03-1991
GB 2437368 A	24-10-2007	NONE	
WO 9625109 A1	22-08-1996	NONE	
US 7232446 B1	19-06-2007	US 7232446 B1	19-06-2007
		US 2007213744 A1	13-09-2007
W0 0172206 A2	04-10-2001	AU 8726101 A	08-10-2001
		CA 2404193 A1	04-10-2001
		EP 1324703 A2	09-07-2003
		JP 2003531652 A	28-10-2003
		MX PA02009444 A	10-03-2003
		W0 0172206 A2	04-10-2001
GB 2214814 A	13-09-1989	NONE	
US 5989268 A	23-11-1999	NONE	