US 20060208193A1

(19) United States

(12) Patent Application Publication (10) Pub. No.: US 2006/0208193 A1

Bodkin (43) Pub. Date: Sep. 21, 2006

(54) MULTI-MODE OPTICAL IMAGER

(76) Inventor: **Andrew Bodkin**, Wellesley, MA (US)

Correspondence Address:
LATHROP & GAGE LC
4845 PEARL EAST CIRCLE
SUITE 300
BOULDER, CO 80301 (US)

(21) Appl. No.: **11/437,085**

(22) Filed: **May 19, 2006**

Related U.S. Application Data

(62) Division of application No. 10/325,129, filed on Dec. 20, 2002, now Pat. No. 7,049,597.

(60) Provisional application No. 60/344,130, filed on Dec. 21, 2001.

Publication Classification

(51) **Int. Cl.**
G01J 5/02 (2006.01)

(52) **U.S. Cl.** **250/353**

(57) **ABSTRACT**

A common aperture, multi-mode optical imager for imaging electromagnetic radiation bands from a field of two or more different wavelengths is described. Fore-optics are provided to gather and direct electromagnetic radiation bands forming an image into an aperture of the multi-mode optical imager. The image is divided into two different wavelength bands, such as visible light and long-wave infrared. The first wavelength band (e.g., visible light) is detected by a first detector, such as a CCD array, for imaging thereof. The second wavelength band (e.g., long-wave infrared) is detected by a second detector, such as an uncooled microbolometer array, for imaging thereof. Additional optics may be provided for conditioning of the first and second wavelength bands, such as such as for changing the magnification, providing cold shielding, filtering, and/or further spectral separation.

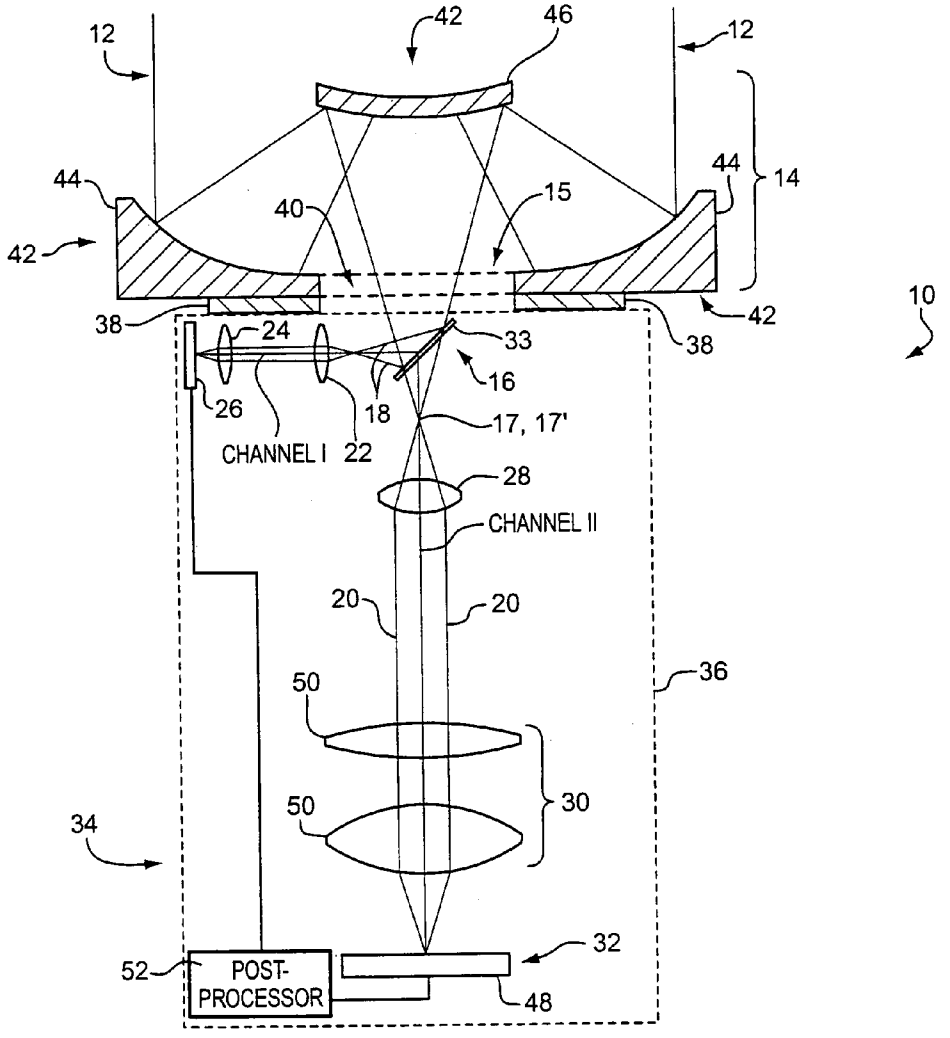

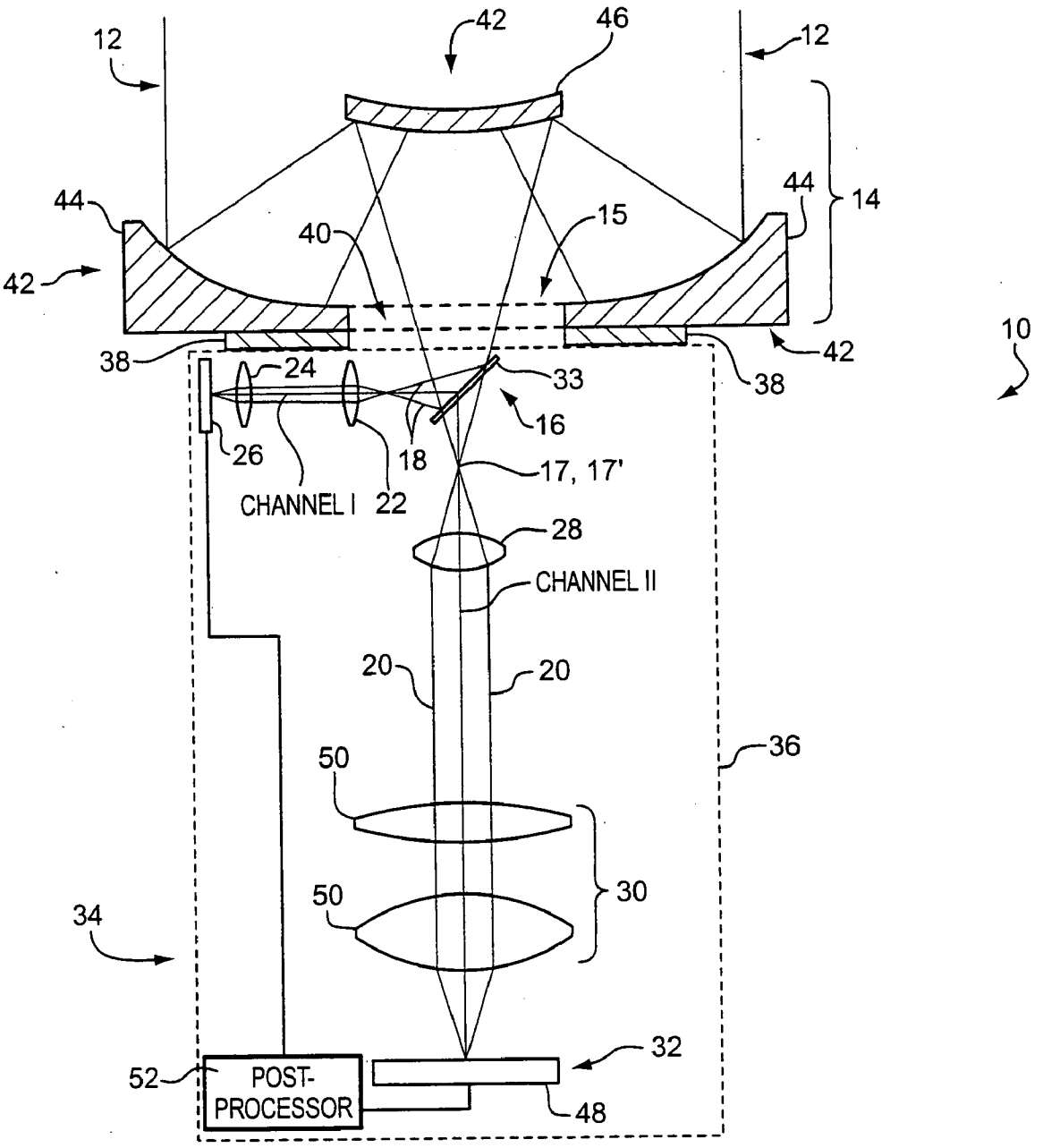
12
42
46
12
44
14
44
40
15
42
10
38
24
33
38
42
16
26
18
17, 17'
CHANNEL I
22
28
CHANNEL II
20
20
36
50
30
50
34
32
52
POST-
PROCESSOR
48

FIG. 1

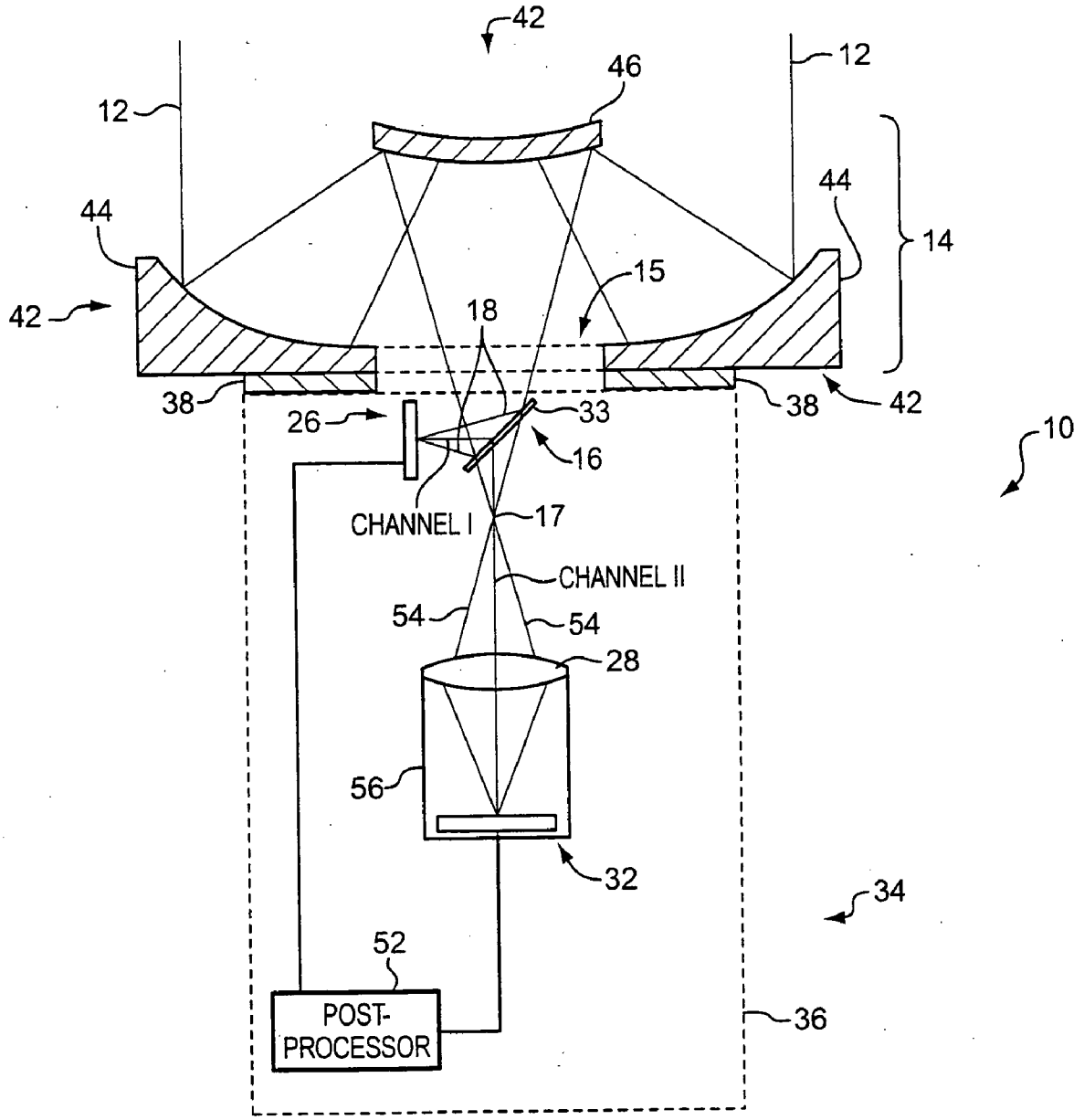
42
46
12
12
44
44
14
15
42
18
38
38
42
26
33
16
10
CHANNEL I
17
CHANNEL II
54
54
28
56
32
34
52
POST-
PROCESSOR
36

FIG. 2

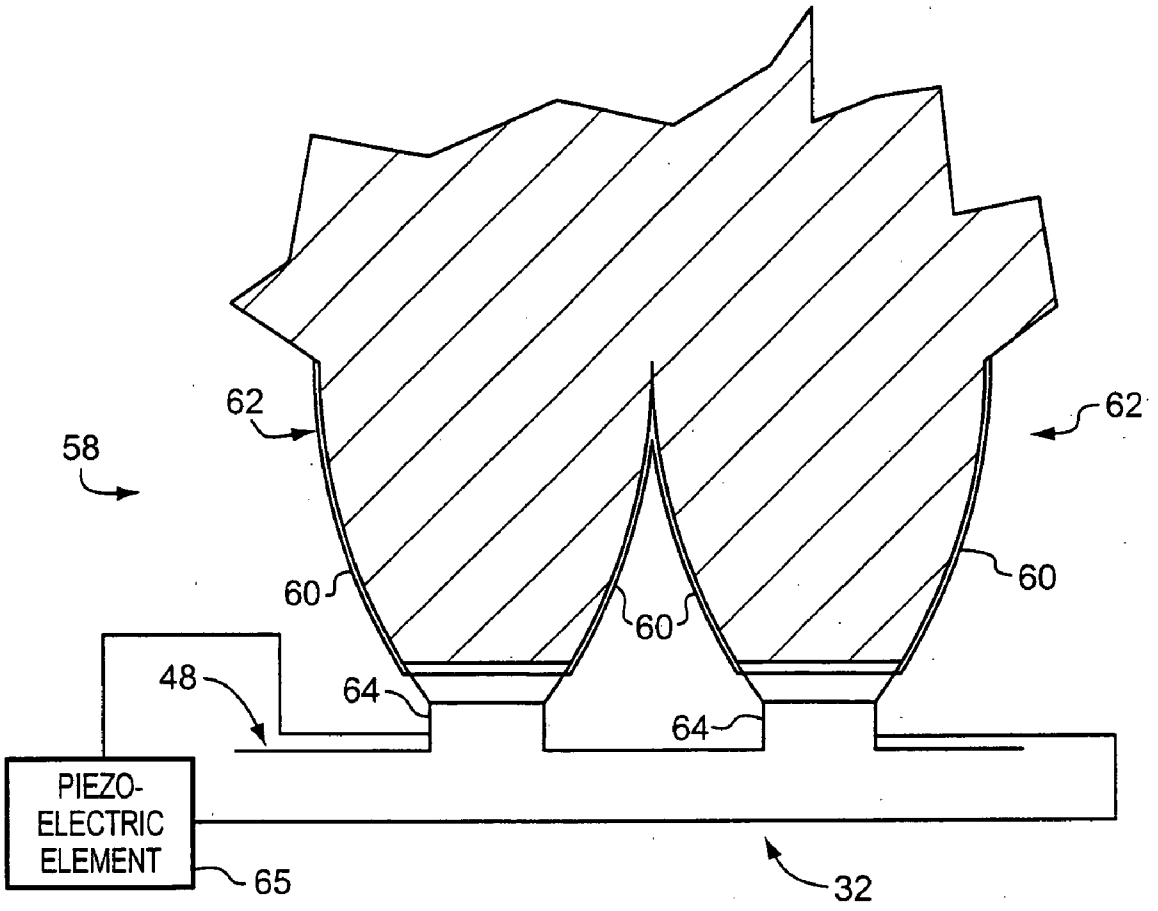

FIG. 3

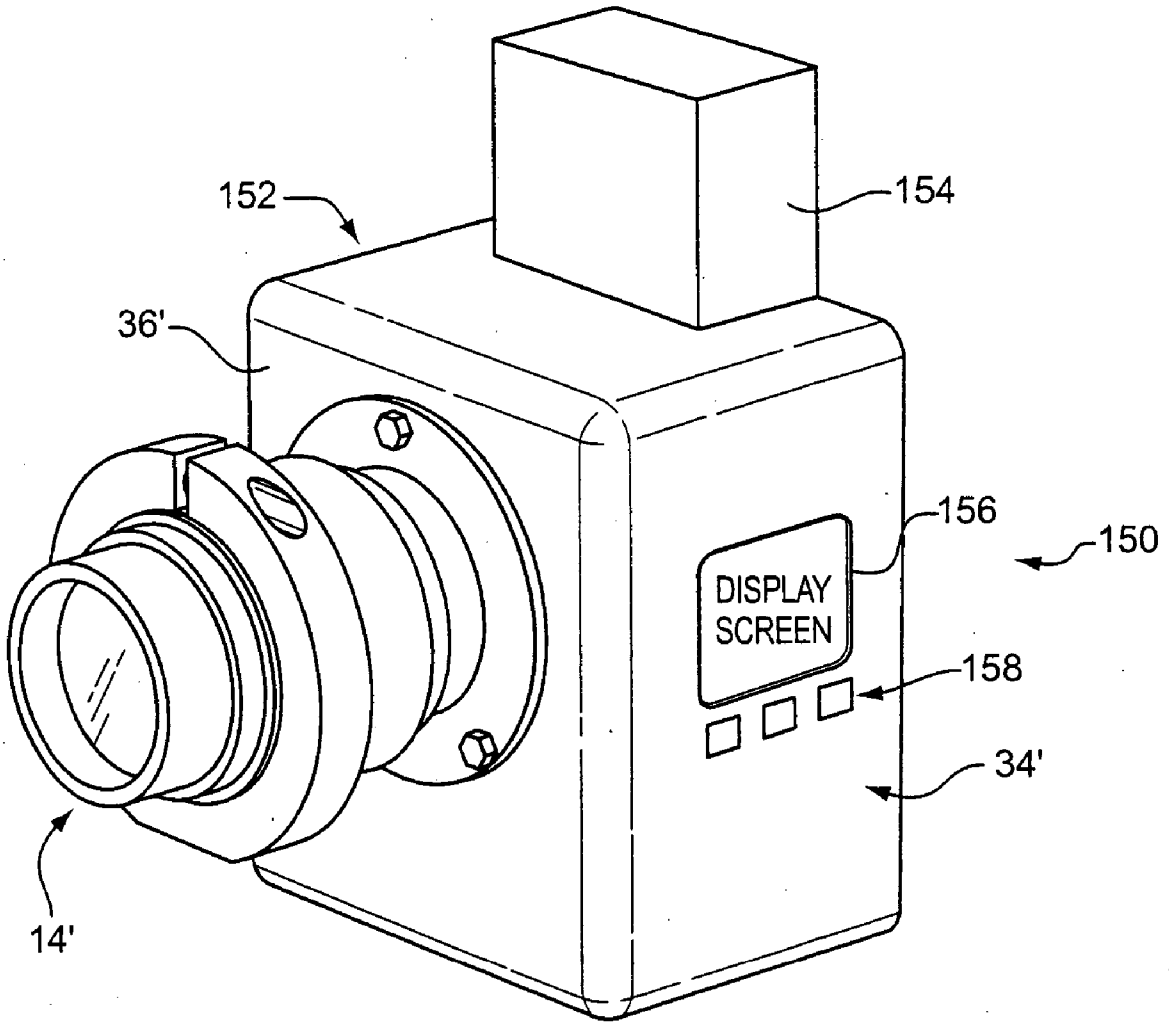

FIG. 4

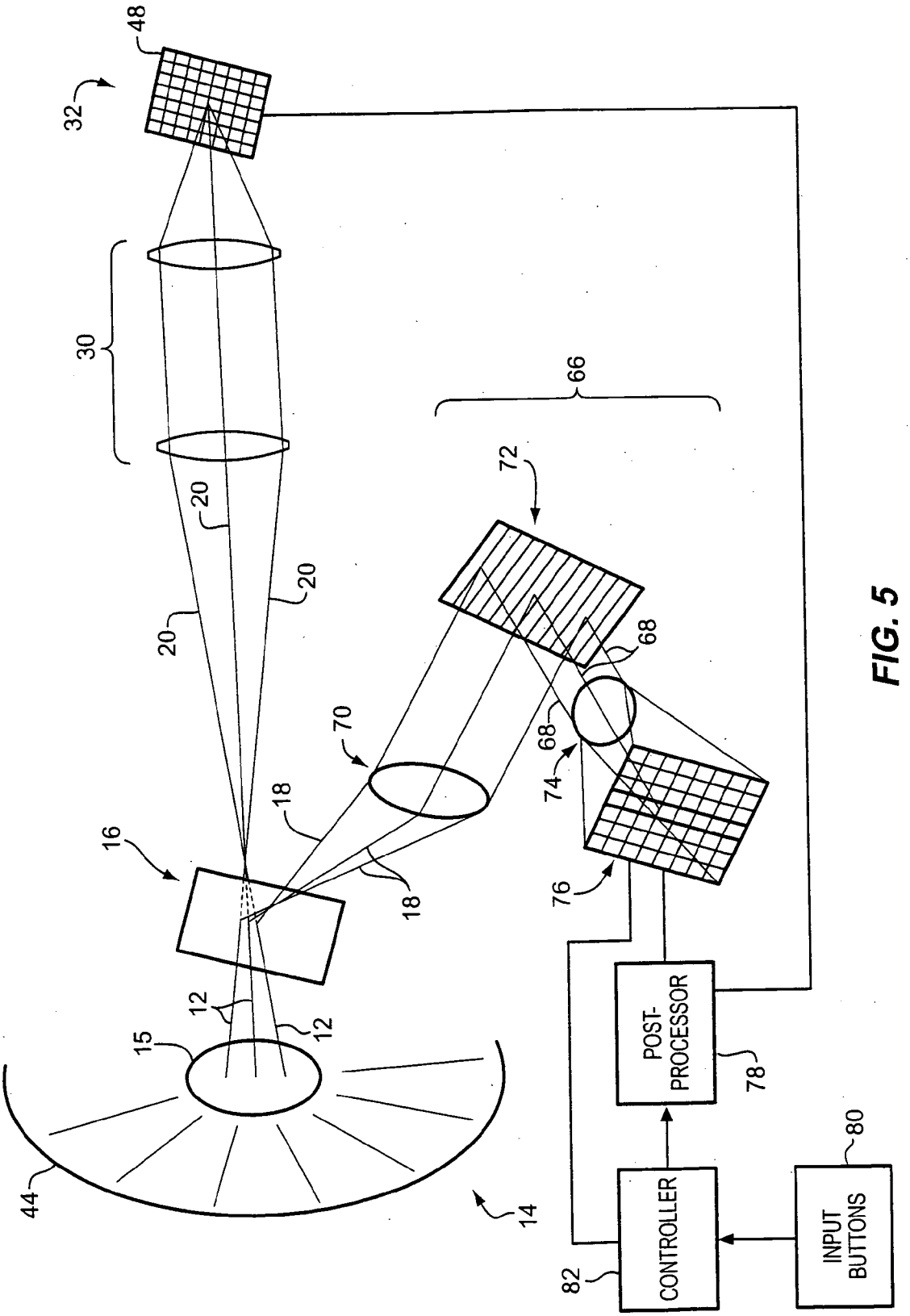
48
32
30
66
72
20
20
20
68
70
68
18
74
16
18
76
12
12
15
POST-
PROCESSOR
78
80
44
14
82
CONTROLLER
INPUT
BUTTONS

FIG. 5

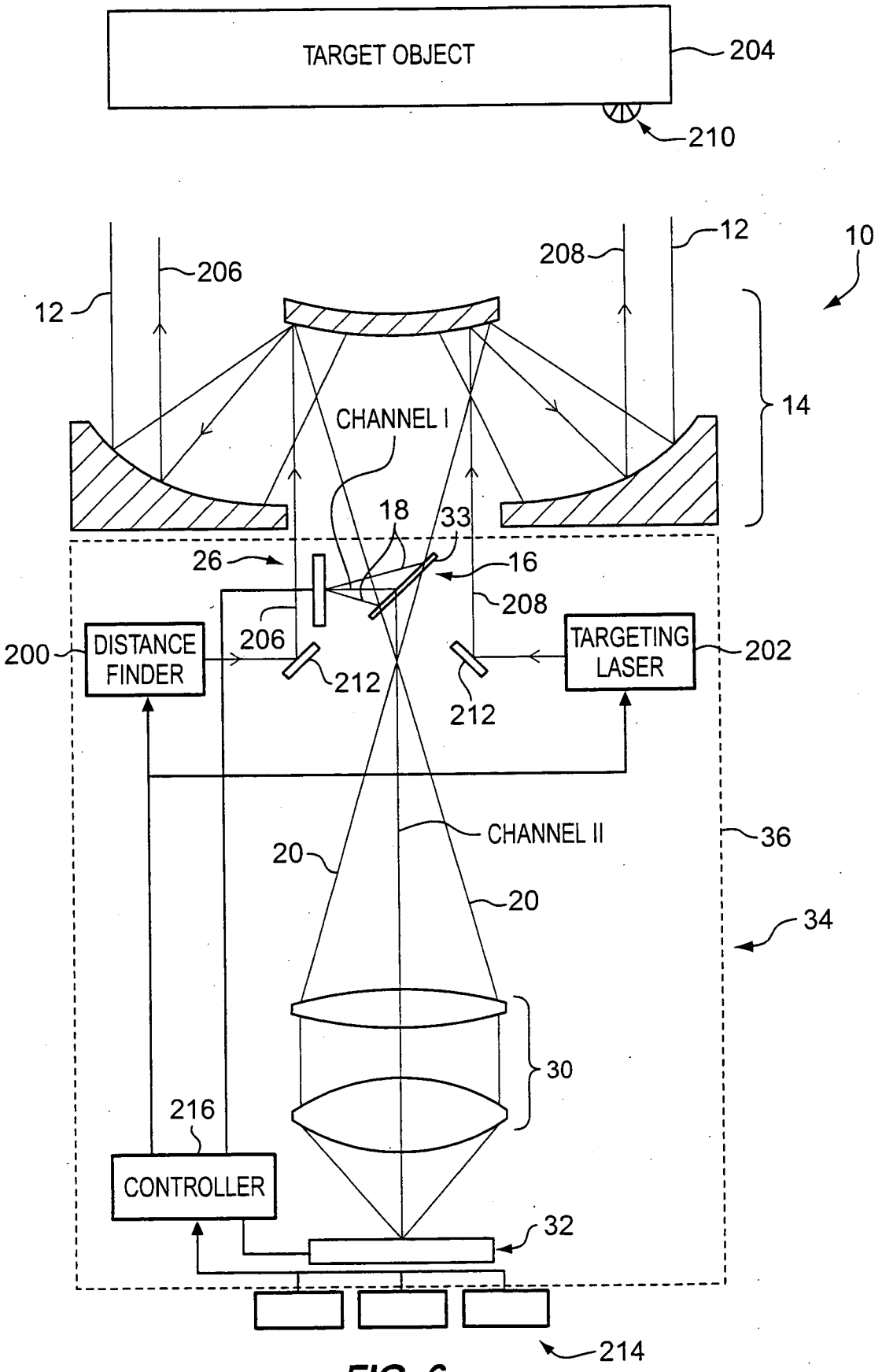
TARGET OBJECT
204
210
12
206
208
12
10
14
CHANNEL I
18
33
26
16
208
206
200
DISTANCE FINDER
212
212
TARGETING LASER
202
CHANNEL II
36
20
20
34
30
216
CONTROLLER
32
214

FIG. 6

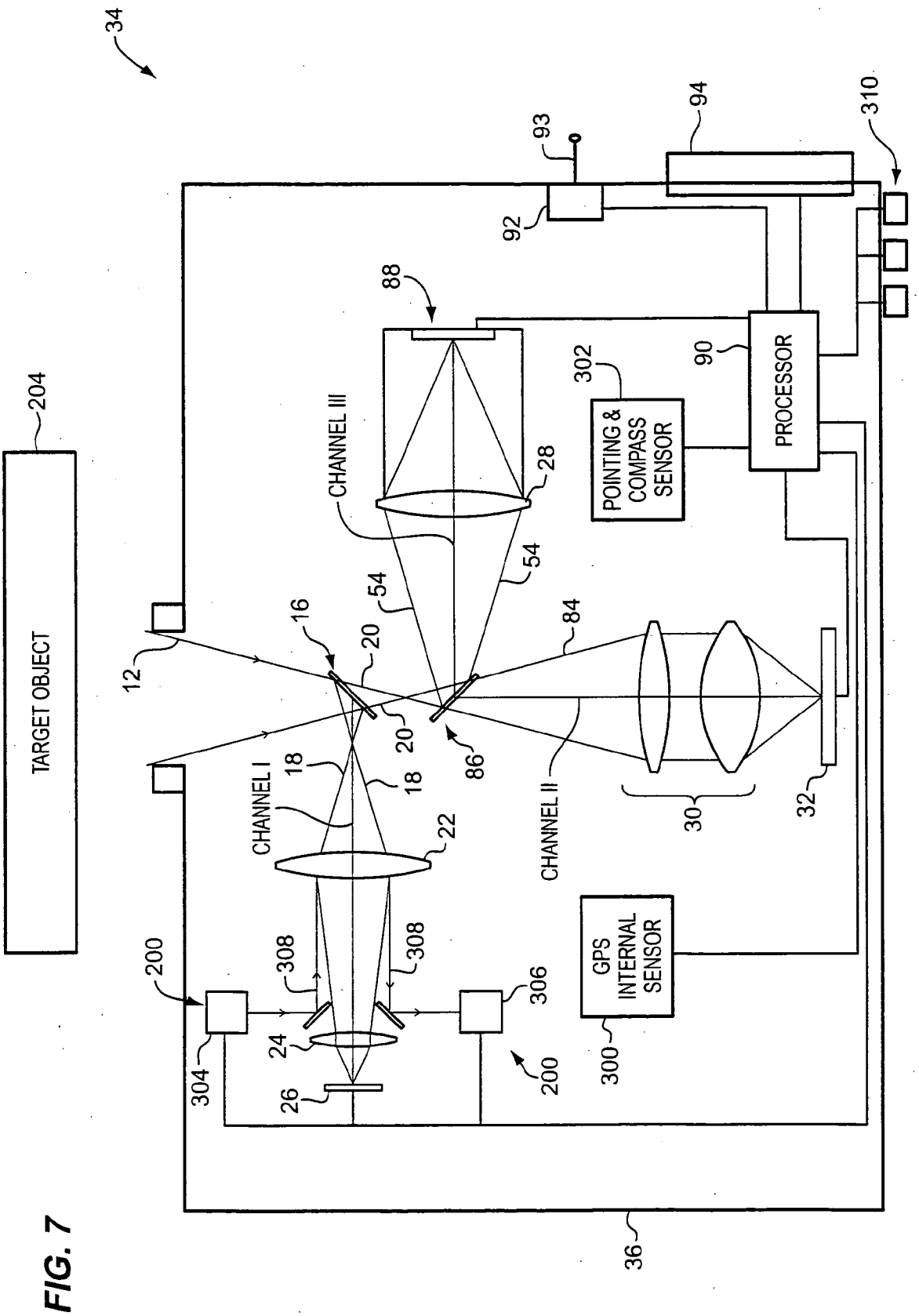
34
93
94
310
92
88
90
PROCESSOR
302
POINTING & COMPASS SENSOR
204
TARGET OBJECT
CHANNEL III
28
54
54
16
20
84
12
20
86
18
18
CHANNEL I
22
CHANNEL II
30
32
200
308
308
306
GPS INTERNAL SENSOR
24
304
26
200
300
36

FIG. 7

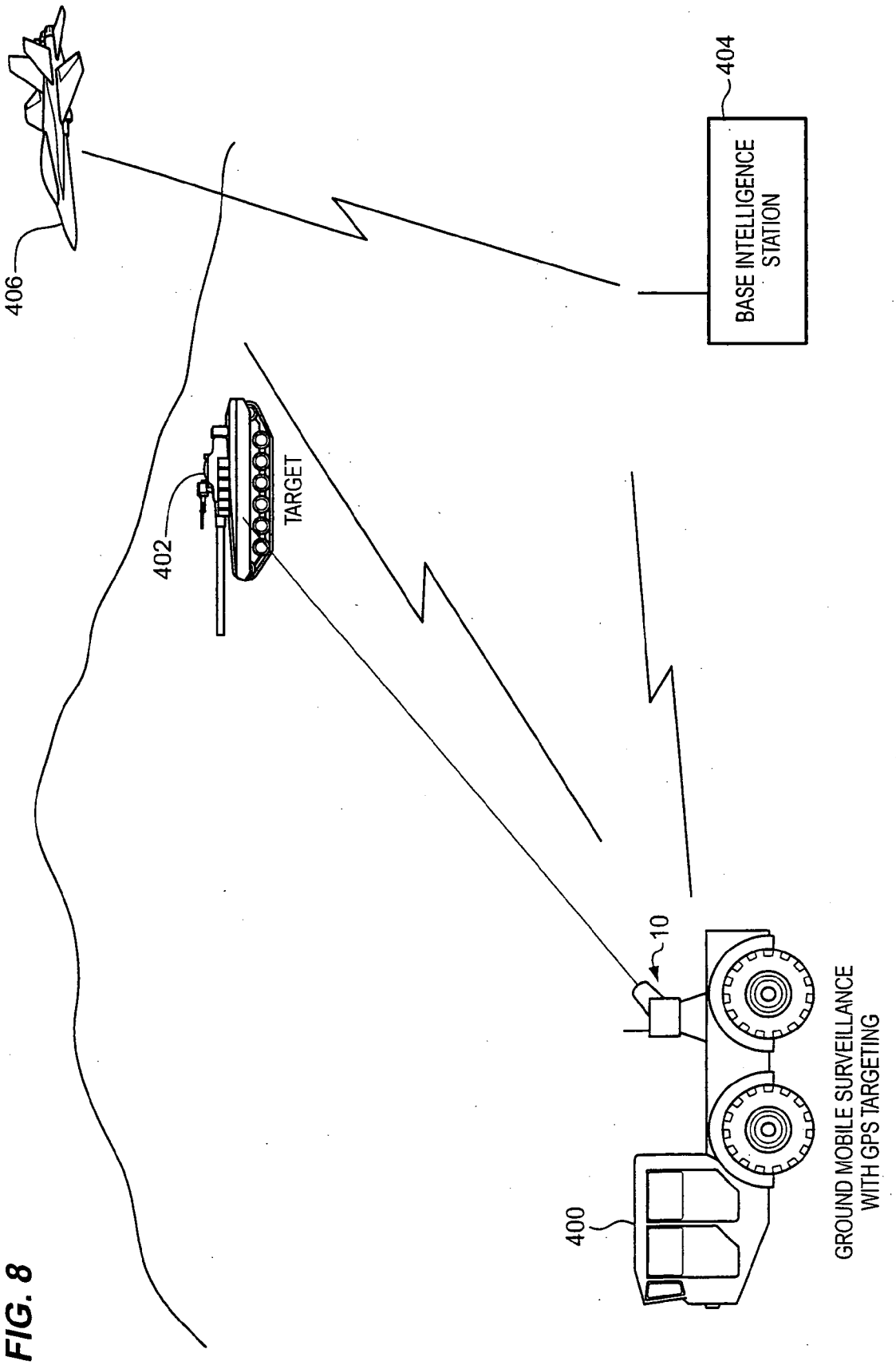
406
404
BASE INTELLIGENCE STATION
402
TARGET
10
400
GROUND MOBILE SURVEILLANCE WITH GPS TARGETING

FIG. 8

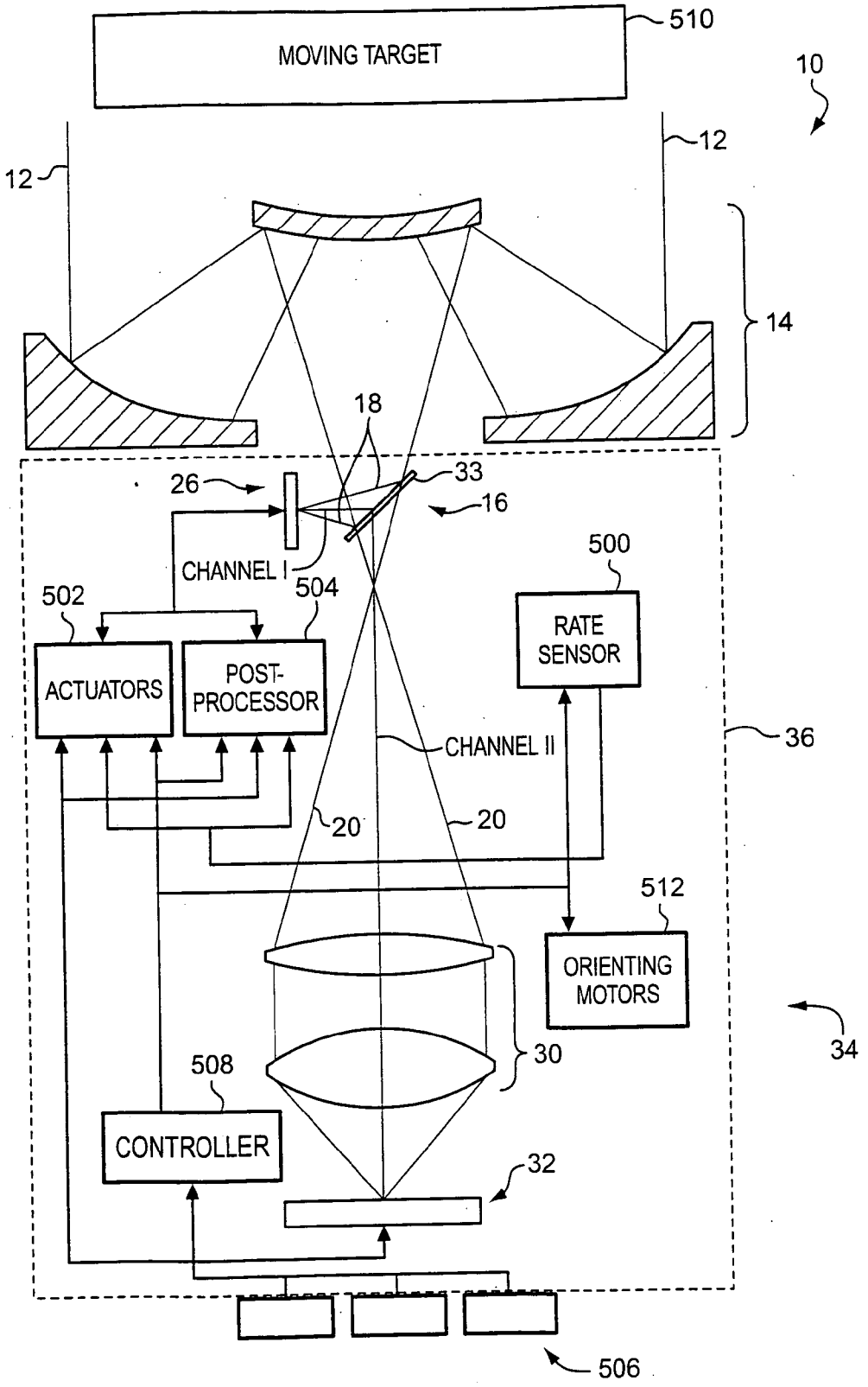
MOVING TARGET
510
10
12
12
14
18
26
33
16
CHANNEL I
504
502
500
ACTUATORS
POST-
PROCESSOR
RATE
SENSOR
36
CHANNEL II
20
20
512
ORIENTING
MOTORS
34
30
508
CONTROLLER
32
506

FIG. 9

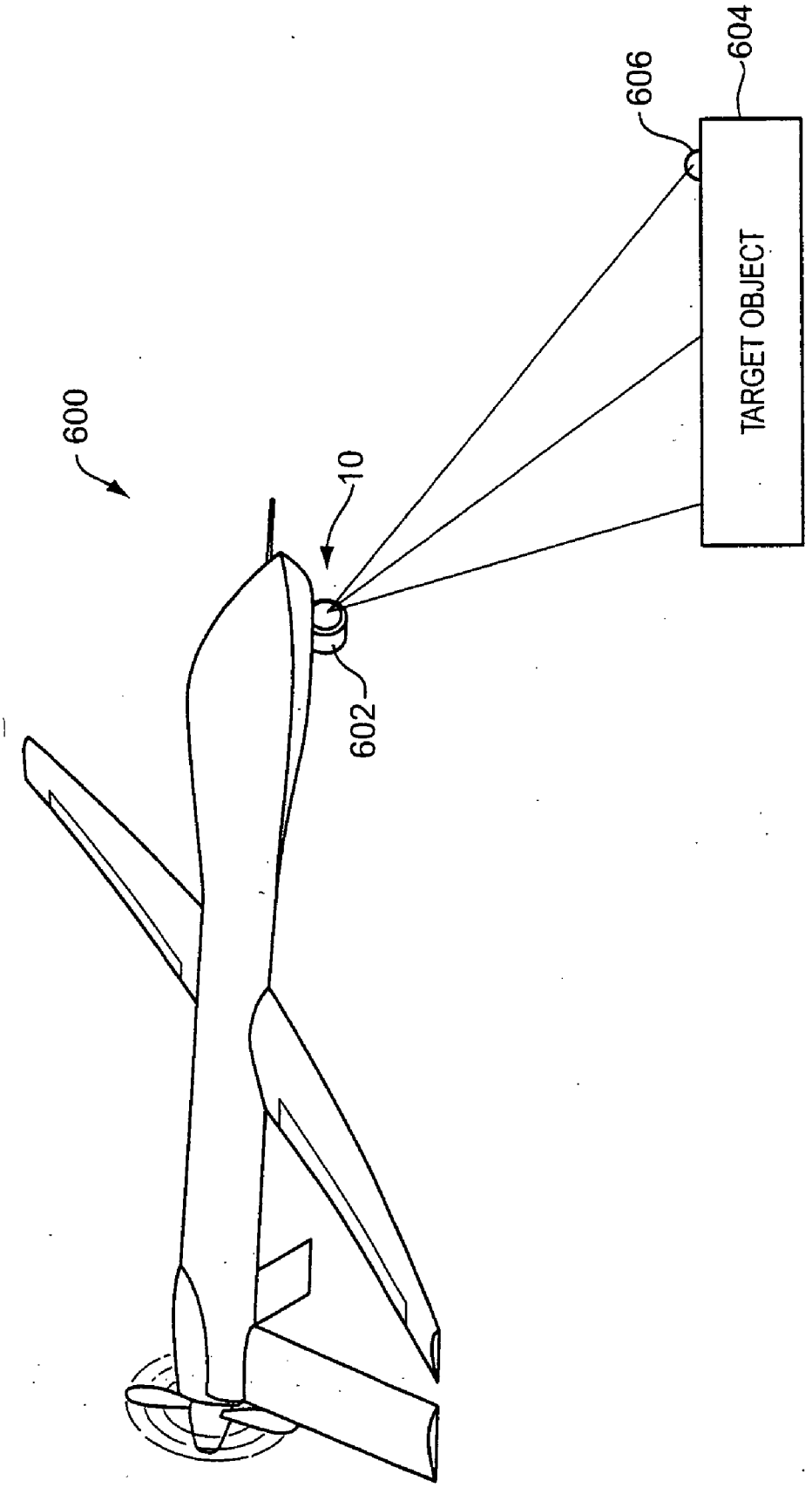

FIG. 10

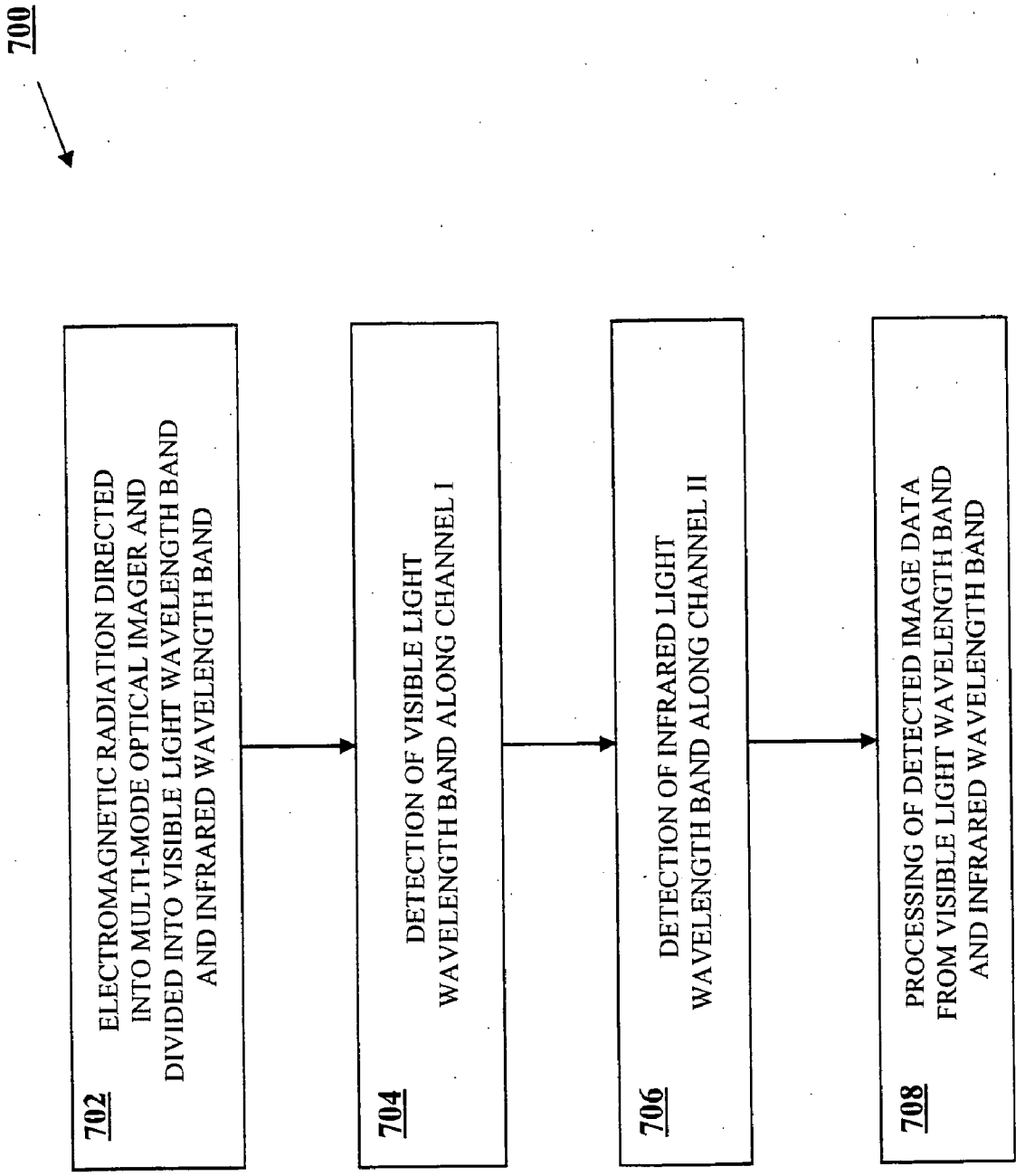
700
702
ELECTROMAGNETIC RADIATION DIRECTED INTO MULTI-MODE OPTICAL IMAGER AND DIVIDED INTO VISIBLE LIGHT WAVELENGTH BAND AND INFRARED WAVELENGTH BAND
704
DETECTION OF VISIBLE LIGHT WAVELENGTH BAND ALONG CHANNEL I
706
DETECTION OF INFRARED LIGHT WAVELENGTH BAND ALONG CHANNEL II
708
PROCESSING OF DETECTED IMAGE DATA FROM VISIBLE LIGHT WAVELENGTH BAND AND INFRARED WAVELENGTH BAND

FIG. 11

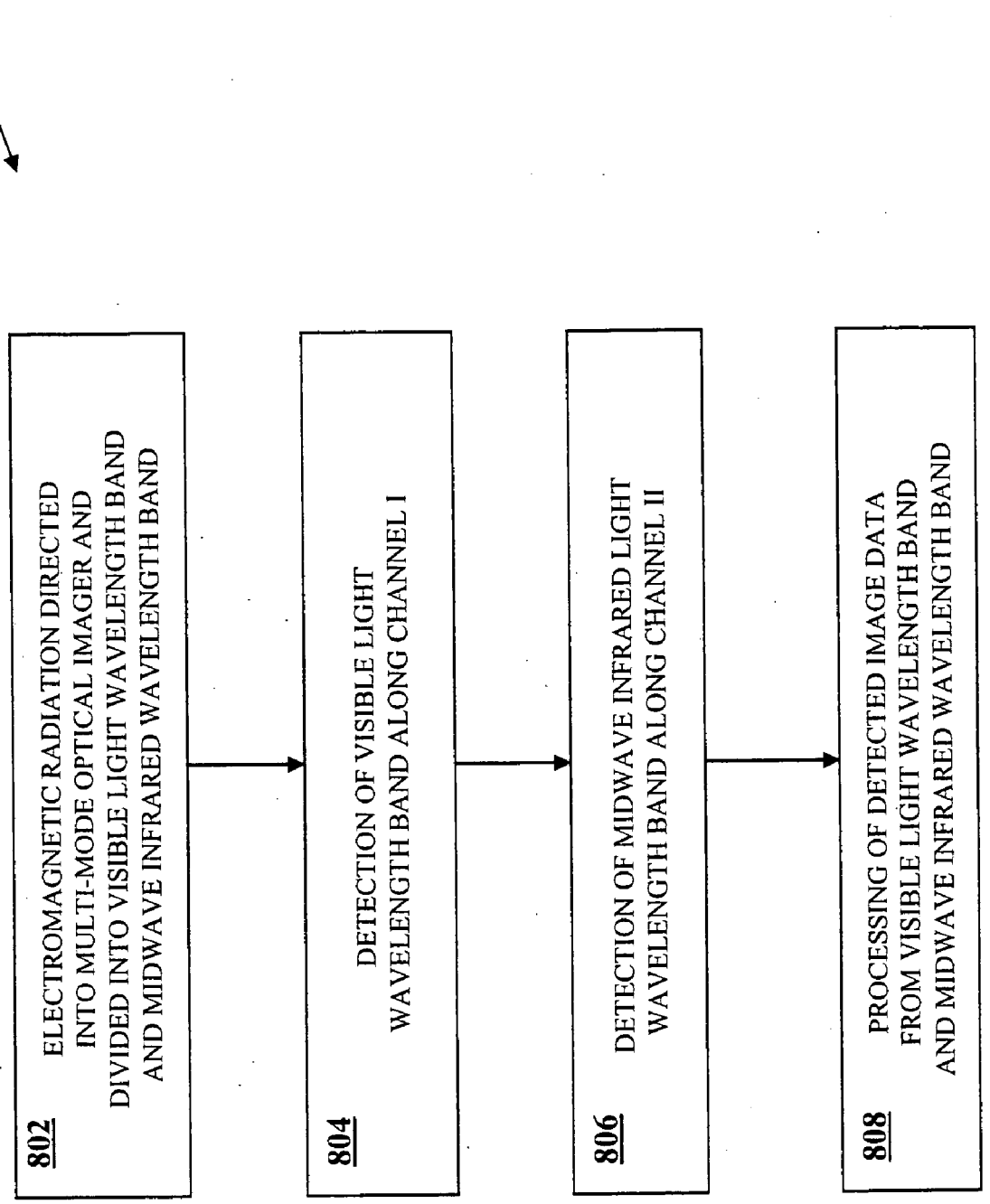
800
802
ELECTROMAGNETIC RADIATION DIRECTED INTO MULTI-MODE OPTICAL IMAGER AND DIVIDED INTO VISIBLE LIGHT WAVELENGTH BAND AND MIDWAVE INFRARED WAVELENGTH BAND
804
DETECTION OF VISIBLE LIGHT WAVELENGTH BAND ALONG CHANNEL I
806
DETECTION OF MIDWAVE INFRARED LIGHT WAVELENGTH BAND ALONG CHANNEL II
808
PROCESSING OF DETECTED IMAGE DATA FROM VISIBLE LIGHT WAVELENGTH BAND AND MIDWAVE INFRARED WAVELENGTH BAND

FIG. 12

FIG. 13

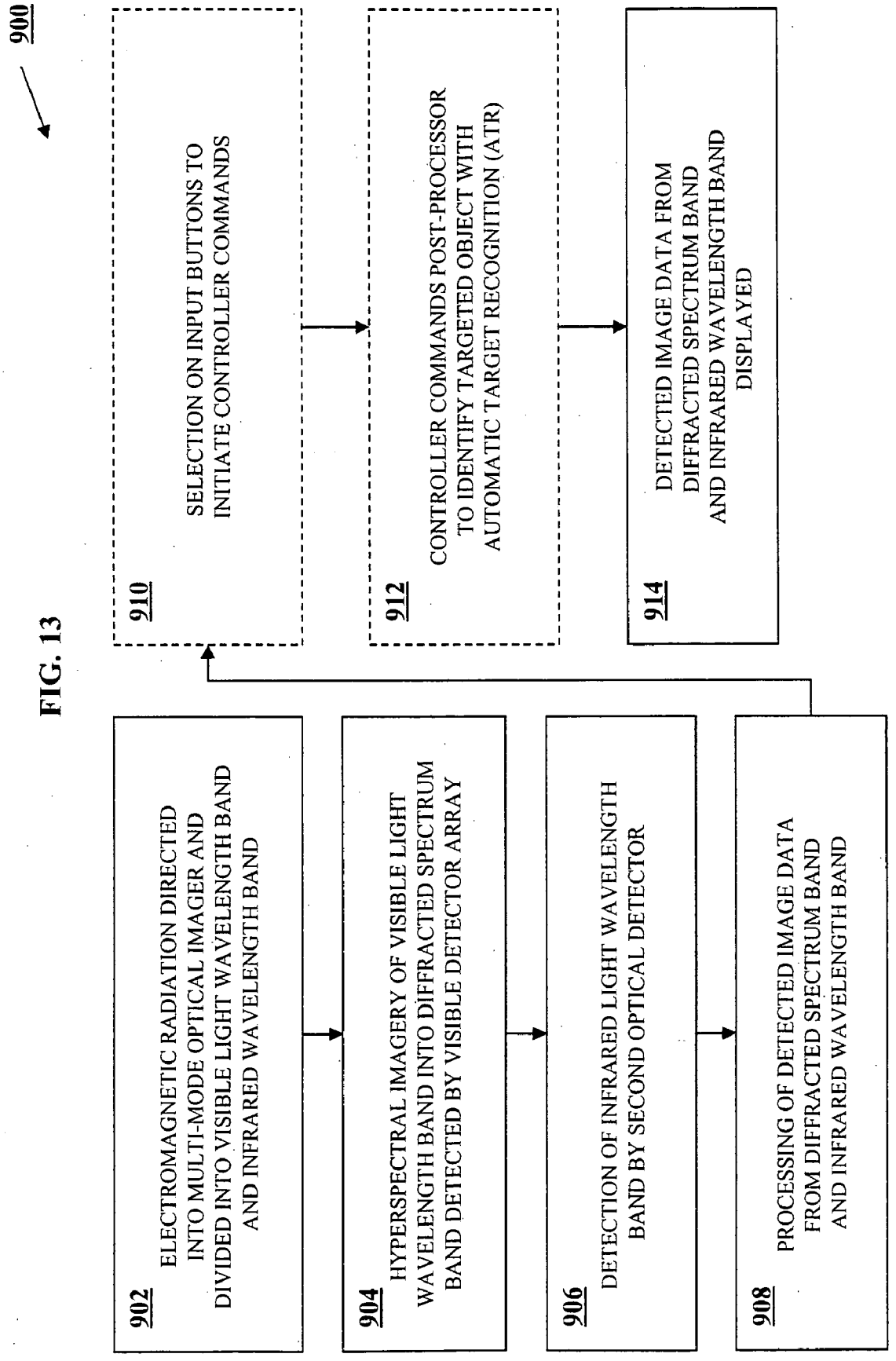
900
902
ELECTROMAGNETIC RADIATION DIRECTED INTO MULTI-MODE OPTICAL IMAGER AND DIVIDED INTO VISIBLE LIGHT WAVELENGTH BAND AND INFRARED WAVELENGTH BAND
904
HYPERSPECTRAL IMAGERY OF VISIBLE LIGHT WAVELENGTH BAND INTO DIFFRACTED SPECTRUM BAND DETECTED BY VISIBLE DETECTOR ARRAY
906
DETECTION OF INFRARED LIGHT WAVELENGTH BAND BY SECOND OPTICAL DETECTOR
908
PROCESSING OF DETECTED IMAGE DATA FROM DIFFRACTED SPECTRUM BAND AND INFRARED WAVELENGTH BAND
910
SELECTION ON INPUT BUTTONS TO INITIATE CONTROLLER COMMANDS
912
CONTROLLER COMMANDS POST-PROCESSOR TO IDENTIFY TARGETED OBJECT WITH AUTOMATIC TARGET RECOGNITION (ATR)
914
DETECTED IMAGE DATA FROM DIFFRACTED SPECTRUM BAND AND INFRARED WAVELENGTH BAND DISPLAYED

FIG. 14

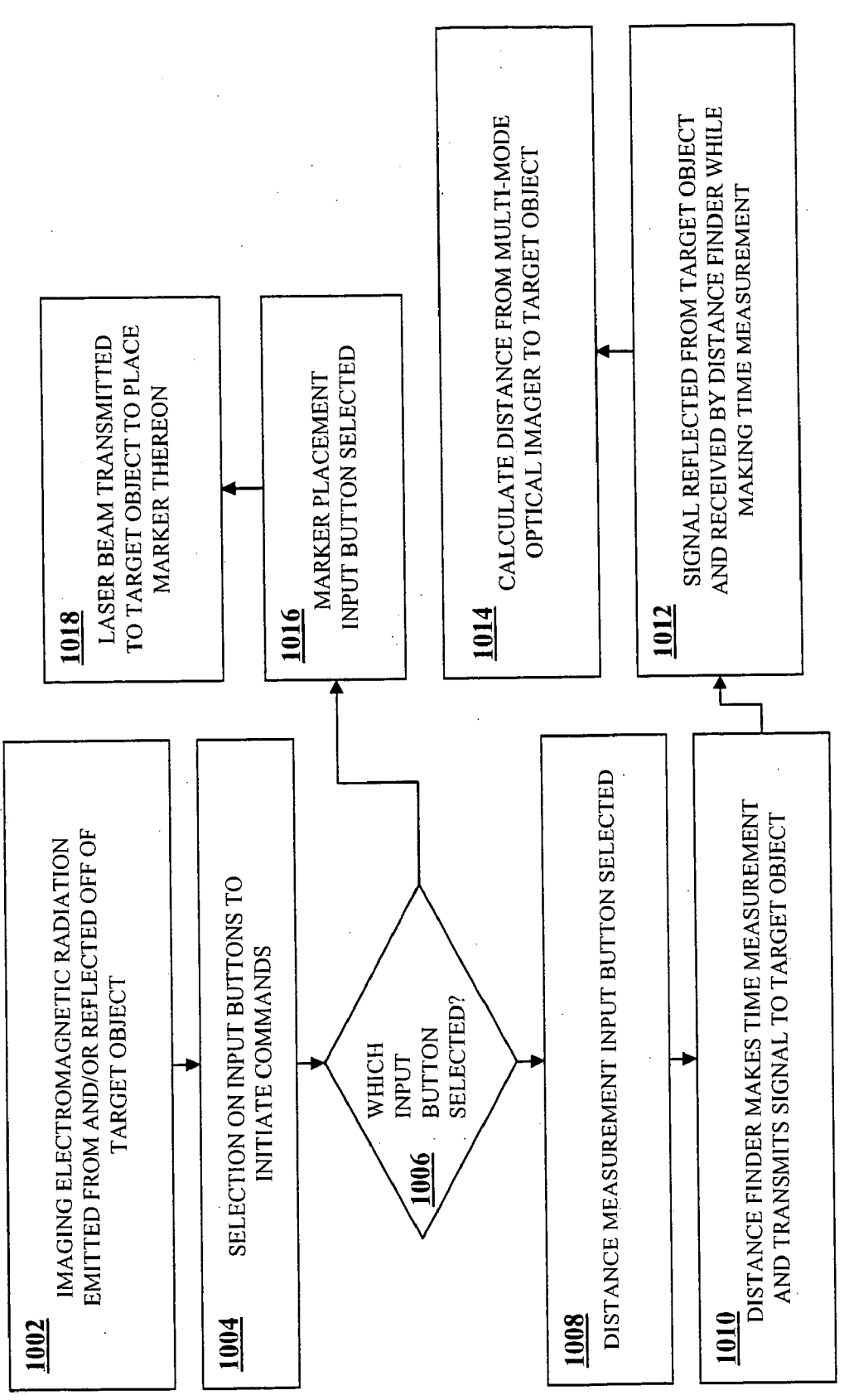
1000
1002
IMAGING ELECTROMAGNETIC RADIATION EMITTED FROM AND/OR REFLECTED OFF OF TARGET OBJECT
1004
SELECTION ON INPUT BUTTONS TO INITIATE COMMANDS
1006
WHICH INPUT BUTTON SELECTED?
1008
DISTANCE MEASUREMENT INPUT BUTTON SELECTED
1010
DISTANCE FINDER MAKES TIME MEASUREMENT AND TRANSMITS SIGNAL TO TARGET OBJECT
1012
SIGNAL REFLECTED FROM TARGET OBJECT AND RECEIVED BY DISTANCE FINDER WHILE MAKING TIME MEASUREMENT
1014
CALCULATE DISTANCE FROM MULTI-MODE OPTICAL IMAGER TO TARGET OBJECT
1016
MARKER PLACEMENT INPUT BUTTON SELECTED
1018
LASER BEAM TRANSMITTED TO TARGET OBJECT TO PLACE MARKER THEREON

FIG. 15A

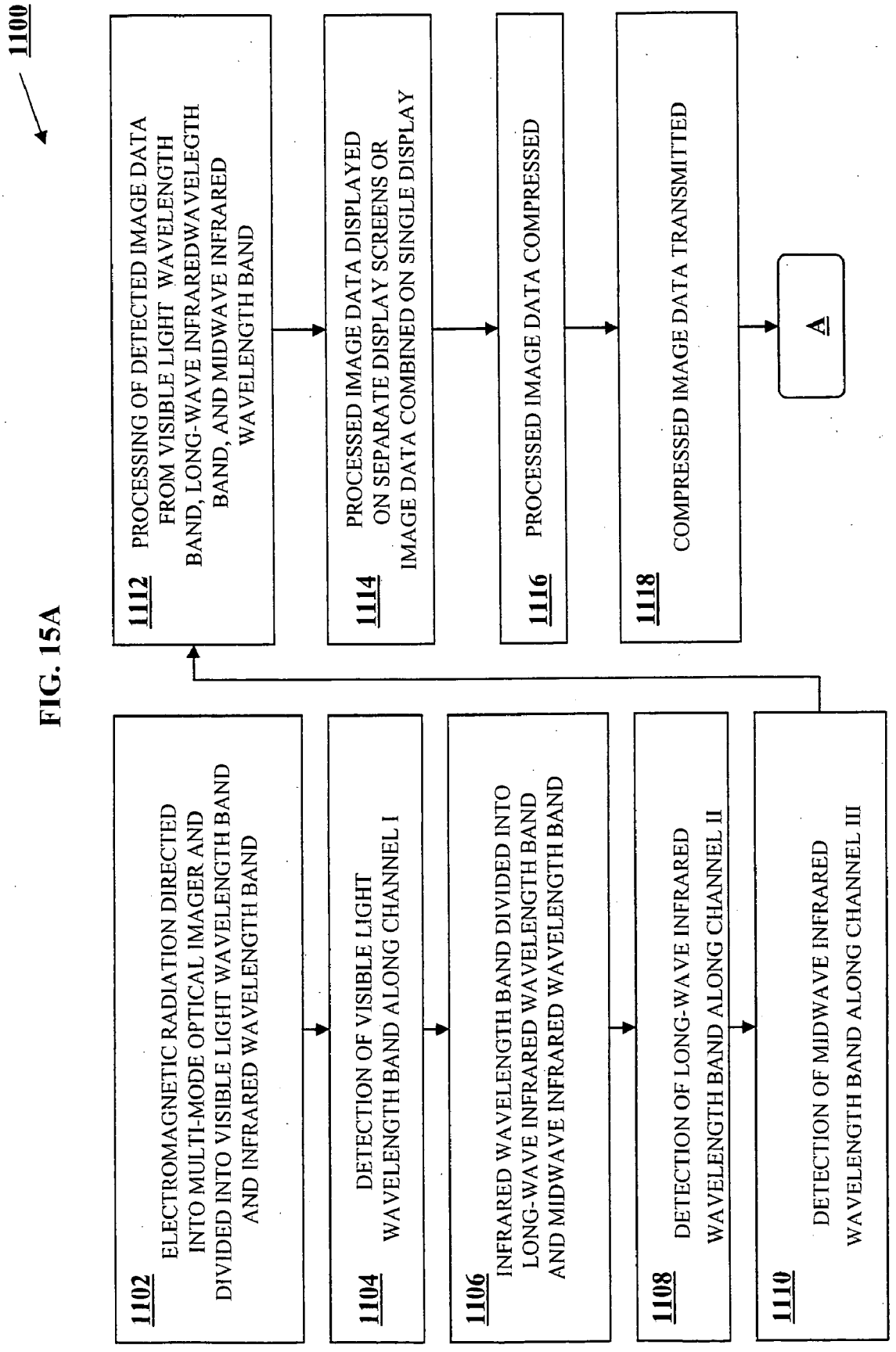
1100
1102
ELECTROMAGNETIC RADIATION DIRECTED INTO MULTI-MODE OPTICAL IMAGER AND DIVIDED INTO VISIBLE LIGHT WAVELENGTH BAND AND INFRARED WAVELENGTH BAND
1104
DETECTION OF VISIBLE LIGHT WAVELENGTH BAND ALONG CHANNEL I
1106
INFRARED WAVELENGTH BAND DIVIDED INTO LONG-WAVE INFRARED WAVELENGTH BAND AND MIDWAVE INFRARED WAVELENGTH BAND
1108
DETECTION OF LONG-WAVE INFRARED WAVELENGTH BAND ALONG CHANNEL II
1110
DETECTION OF MIDWAVE INFRARED WAVELENGTH BAND ALONG CHANNEL III
1112
PROCESSING OF DETECTED IMAGE DATA FROM VISIBLE LIGHT WAVELENGTH BAND, LONG-WAVE INFRAREDWAVELEGTH BAND, AND MIDWAVE INFRARED WAVELENGTH BAND
1114
PROCESSED IMAGE DATA DISPLAYED ON SEPARATE DISPLAY SCREENS OR IMAGE DATA COMBINED ON SINGLE DISPLAY
1116
PROCESSED IMAGE DATA COMPRESSED
1118
COMPRESSED IMAGE DATA TRANSMITTED
A

FIG. 15B

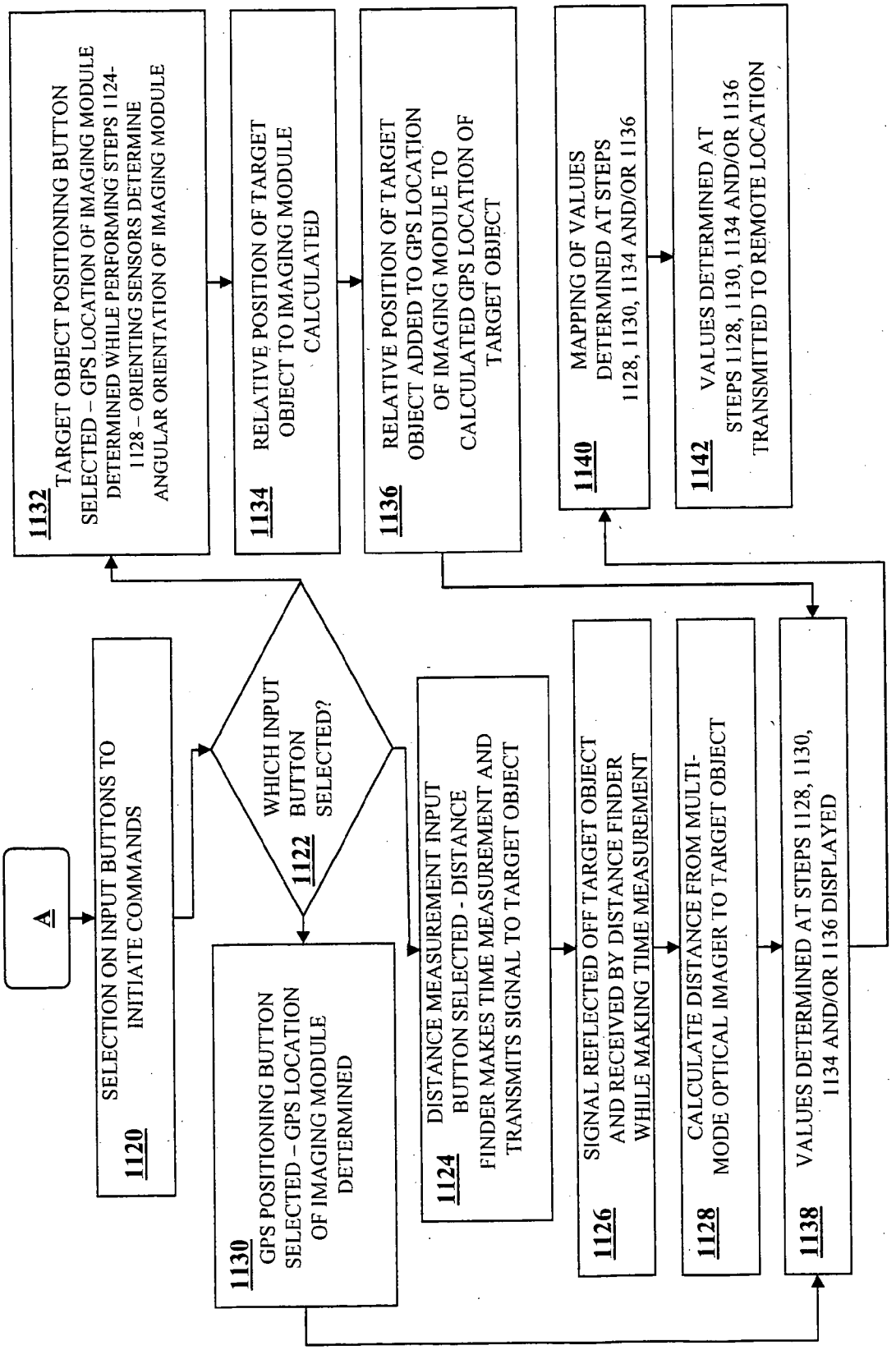
1100
A
SELECTION ON INPUT BUTTONS TO INITIATE COMMANDS
1120
WHICH INPUT BUTTON SELECTED?
1122
1130 GPS POSITIONING BUTTON SELECTED – GPS LOCATION OF IMAGING MODULE DETERMINED
1124 DISTANCE MEASUREMENT INPUT BUTTON SELECTED - DISTANCE FINDER MAKES TIME MEASUREMENT AND TRANSMITS SIGNAL TO TARGET OBJECT
1126 SIGNAL REFLECTED OFF TARGET OBJECT AND RECEIVED BY DISTANCE FINDER WHILE MAKING TIME MEASUREMENT
1128 CALCULATE DISTANCE FROM MULTI-MODE OPTICAL IMAGER TO TARGET OBJECT
1138 VALUES DETERMINED AT STEPS 1128, 1130, 1134 AND/OR 1136 DISPLAYED
1132 TARGET OBJECT POSITIONING BUTTON SELECTED – GPS LOCATION OF IMAGING MODULE DETERMINED WHILE PERFORMING STEPS 1124-1128 – ORIENTING SENSORS DETERMINE ANGULAR ORIENTATION OF IMAGING MODULE
1134 RELATIVE POSITION OF TARGET OBJECT TO IMAGING MODULE CALCULATED
1136 RELATIVE POSITION OF TARGET OBJECT ADDED TO GPS LOCATION OF IMAGING MODULE TO CALCULATED GPS LOCATION OF TARGET OBJECT
1140 MAPPING OF VALUES DETERMINED AT STEPS 1128, 1130, 1134 AND/OR 1136
1142 VALUES DETERMINED AT STEPS 1128, 1130, 1134 AND/OR 1136 TRANSMITTED TO REMOTE LOCATION

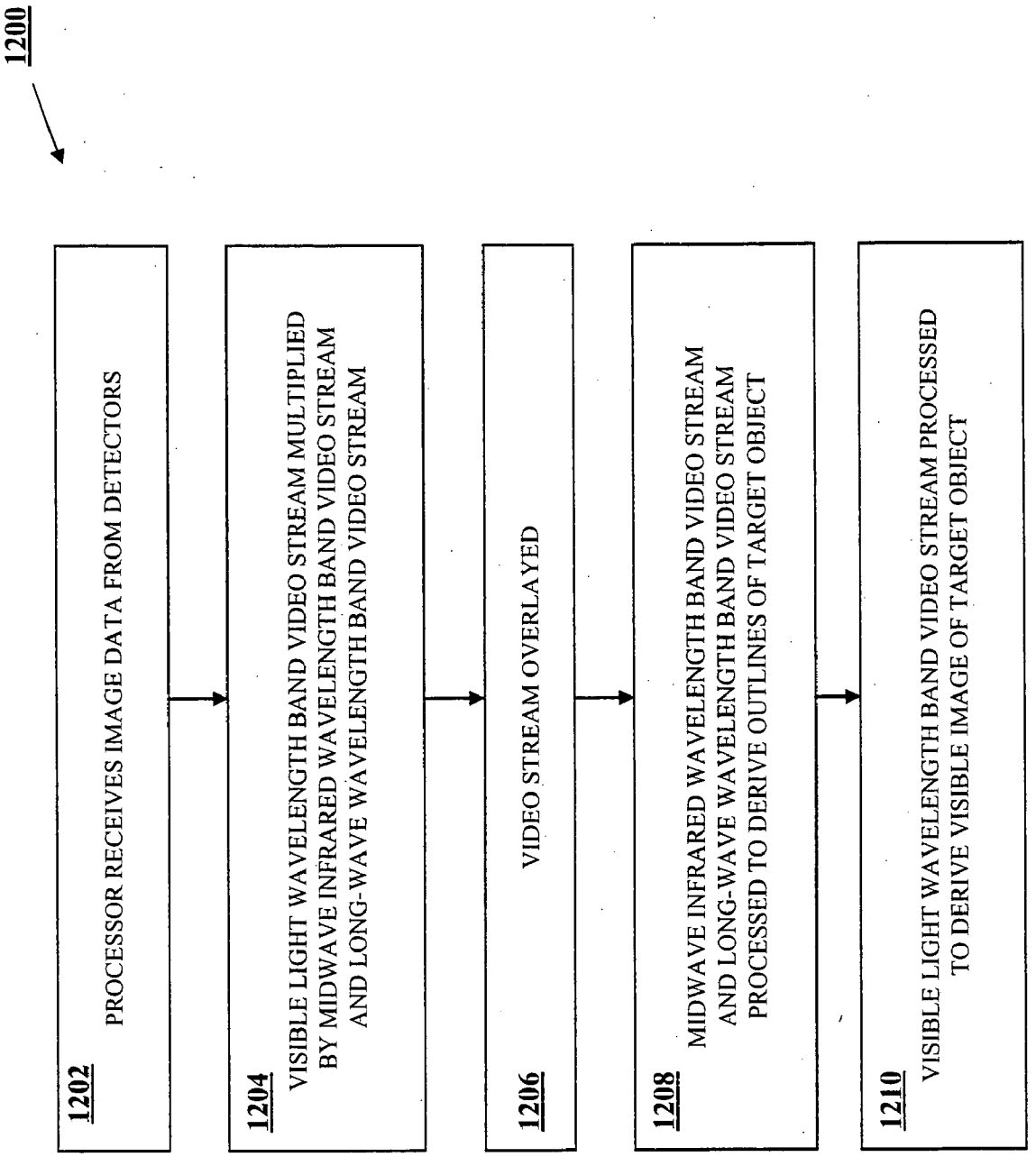
1200
1202
PROCESSOR RECEIVES IMAGE DATA FROM DETECTORS
1204
VISIBLE LIGHT WAVELENGTH BAND VIDEO STREAM MULTIPLIED BY MIDWAVE INFRARED WAVELENGTH BAND VIDEO STREAM AND LONG-WAVE WAVELENGTH BAND VIDEO STREAM
1206
VIDEO STREAM OVERLAYED
1208
MIDWAVE INFRARED WAVELENGTH BAND VIDEO STREAM AND LONG-WAVE WAVELENGTH BAND VIDEO STREAM PROCESSED TO DERIVE OUTLINES OF TARGET OBJECT
1210
VISIBLE LIGHT WAVELENGTH BAND VIDEO STREAM PROCESSED TO DERIVE VISIBLE IMAGE OF TARGET OBJECT

FIG. 16

FIG. 17

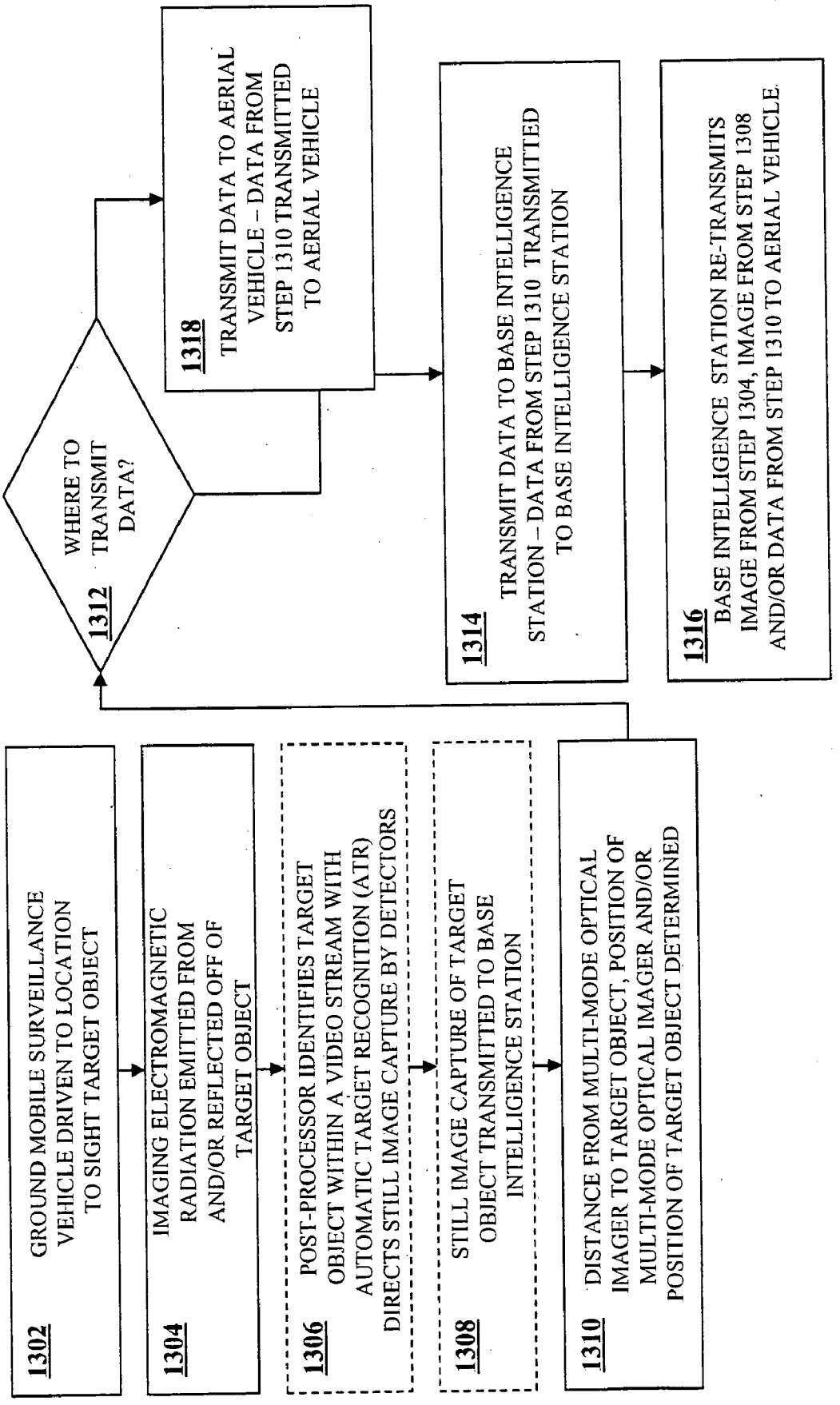
1300
1302
GROUND MOBILE SURVEILLANCE VEHICLE DRIVEN TO LOCATION TO SIGHT TARGET OBJECT
1304
IMAGING ELECTROMAGNETIC RADIATION EMITTED FROM AND/OR REFLECTED OFF OF TARGET OBJECT
1306
POST-PROCESSOR IDENTIFIES TARGET OBJECT WITHIN A VIDEO STREAM WITH AUTOMATIC TARGET RECOGNITION (ATR) DIRECTS STILL IMAGE CAPTURE BY DETECTORS
1308
STILL IMAGE CAPTURE OF TARGET OBJECT TRANSMITTED TO BASE INTELLIGENCE STATION
1310
DISTANCE FROM MULTI-MODE OPTICAL IMAGER TO TARGET OBJECT, POSITION OF MULTI-MODE OPTICAL IMAGER AND/OR POSITION OF TARGET OBJECT DETERMINED
1312
WHERE TO TRANSMIT DATA?
1318
TRANSMIT DATA TO AERIAL VEHICLE – DATA FROM STEP 1310 TRANSMITTED TO AERIAL VEHICLE
1314
TRANSMIT DATA TO BASE INTELLIGENCE STATION – DATA FROM STEP 1310 TRANSMITTED TO BASE INTELLIGENCE STATION
1316
BASE INTELLIGENCE STATION RE-TRANSMITS IMAGE FROM STEP 1304, IMAGE FROM STEP 1308 AND/OR DATA FROM STEP 1310 TO AERIAL VEHICLE

FIG. 18

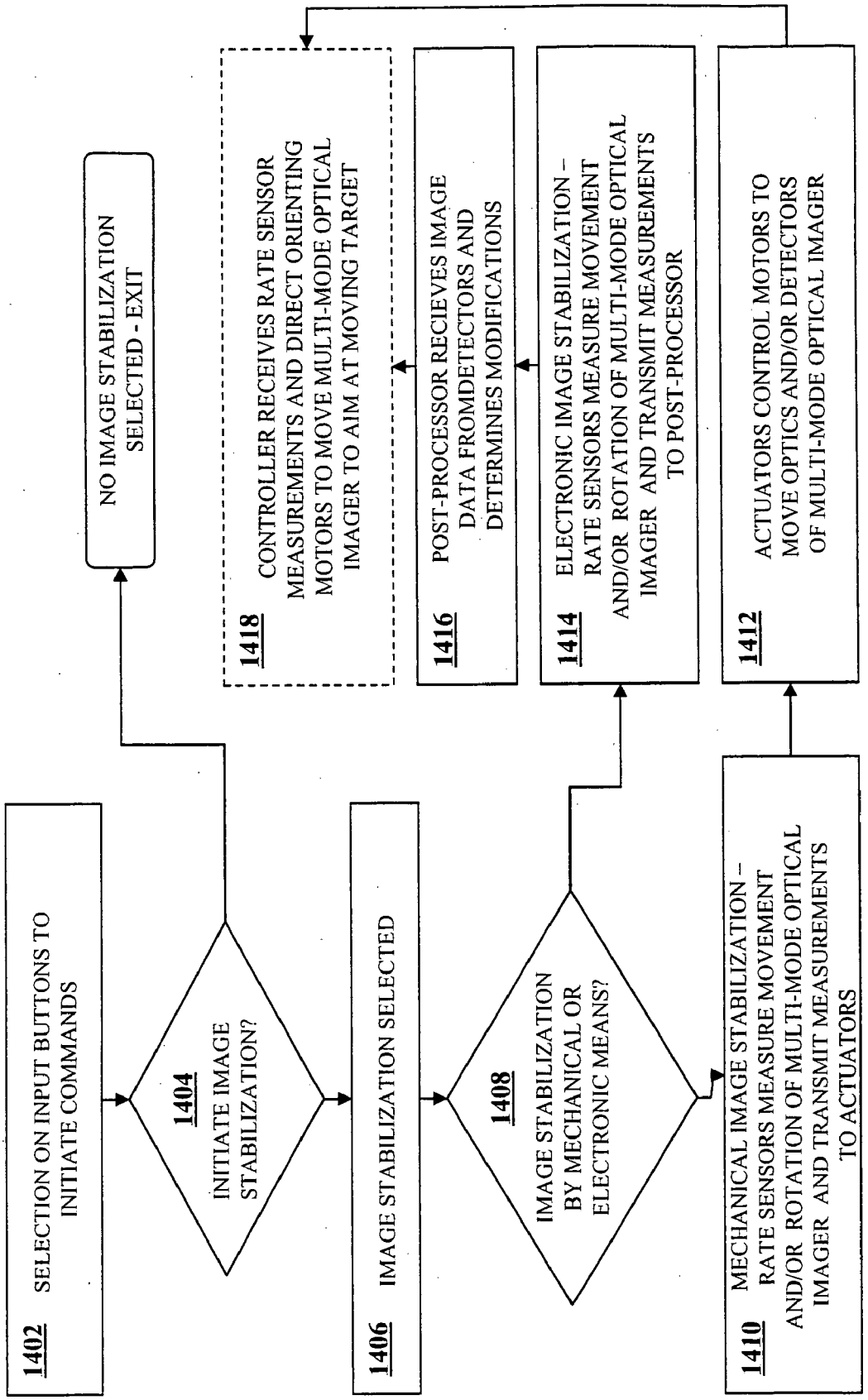
1400
1402 SELECTION ON INPUT BUTTONS TO INITIATE COMMANDS
1404 INITIATE IMAGE STABILIZATION?
NO IMAGE STABILIZATION SELECTED - EXIT
1406 IMAGE STABILIZATION SELECTED
1408 IMAGE STABILIZATION BY MECHANICAL OR ELECTRONIC MEANS?
1410 MECHANICAL IMAGE STABILIZATION – RATE SENSORS MEASURE MOVEMENT AND/OR ROTATION OF MULTI-MODE OPTICAL IMAGER AND TRANSMIT MEASUREMENTS TO ACTUATORS
1412 ACTUATORS CONTROL MOTORS TO MOVE OPTICS AND/OR DETECTORS OF MULTI-MODE OPTICAL IMAGER
1414 ELECTRONIC IMAGE STABILIZATION – RATE SENSORS MEASURE MOVEMENT AND/OR ROTATION OF MULTI-MODE OPTICAL IMAGER AND TRANSMIT MEASUREMENTS TO POST-PROCESSOR
1416 POST-PROCESSOR RECIEVES IMAGE DATA FROMDETECTORS AND DETERMINES MODIFICATIONS
1418 CONTROLLER RECEIVES RATE SENSOR MEASUREMENTS AND DIRECT ORIENTING MOTORS TO MOVE MULTI-MODE OPTICAL IMAGER TO AIM AT MOVING TARGET

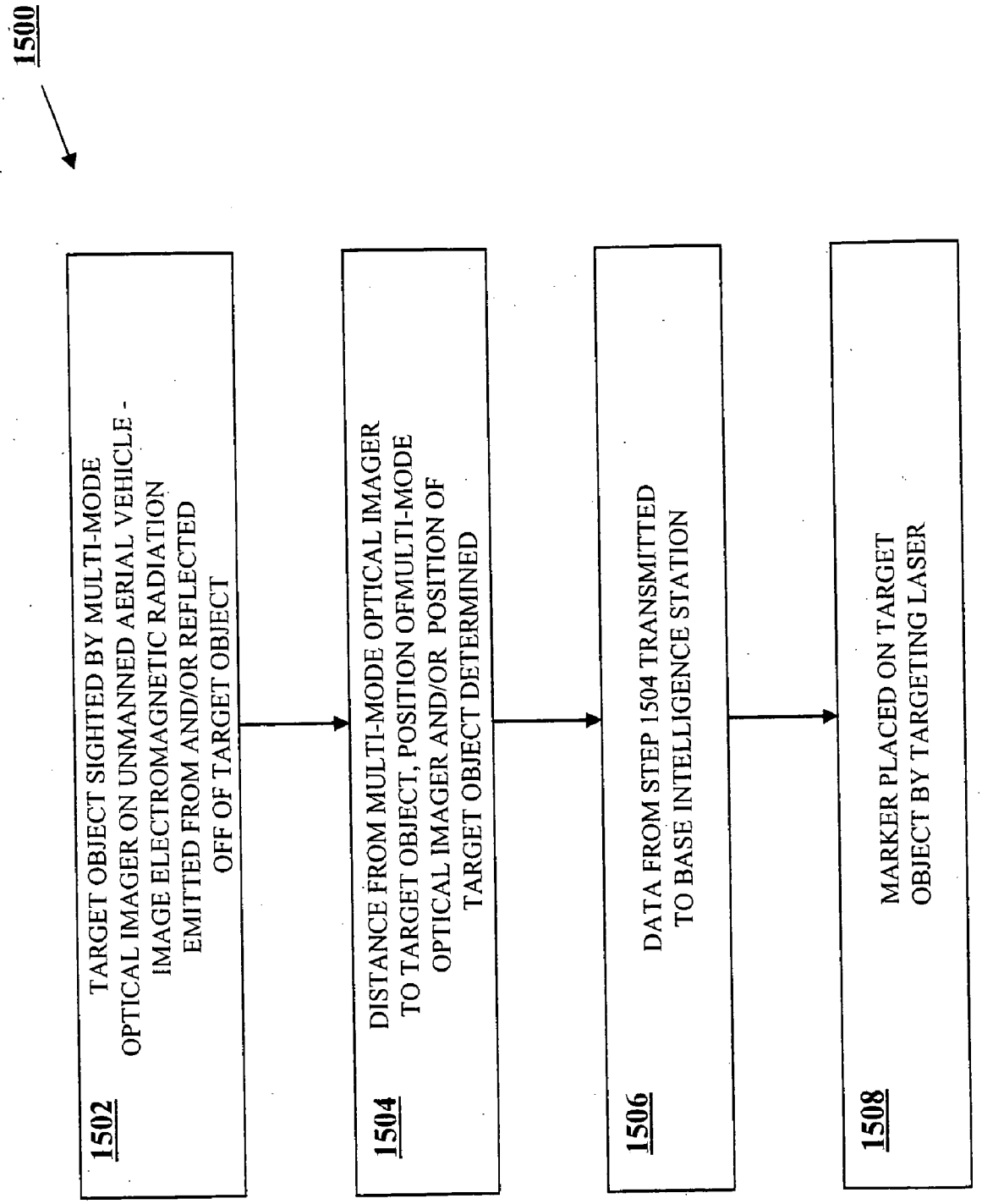
1500
1502
TARGET OBJECT SIGHTED BY MULTI-MODE OPTICAL IMAGER ON UNMANNED AERIAL VEHICLE - IMAGE ELECTROMAGNETIC RADIATION EMITTED FROM AND/OR REFLECTED OFF OF TARGET OBJECT
1504
DISTANCE FROM MULTI-MODE OPTICAL IMAGER TO TARGET OBJECT, POSITION OFMULTI-MODE OPTICAL IMAGER AND/OR POSITION OF TARGET OBJECT DETERMINED
1506
DATA FROM STEP 1504 TRANSMITTED TO BASE INTELLIGENCE STATION
1508
MARKER PLACED ON TARGET OBJECT BY TARGETING LASER

FIG. 19

MULTI-MODE OPTICAL IMAGER

RELATED APPLICATIONS

[0001] This application is a divisional of U.S. patent application Ser. No. 10/325,129, filed Dec. 20, 2002, which claims priority to U.S. Patent Application 60/344,130, filed Dec. 21, 2001. The above-identified related applications are hereby incorporated by reference in their entirety as though fully set forth herein.

BACKGROUND

[0002] Dual-mode imagers are known in the art to provide a device detecting both visible light and infrared radiation. However, current art dual-mode imagers are costly, complex, bulky and heavy. Further, refractive lenses often used in dual-mode imagers fair poorly in focusing an image having differing electromagnetic wavelengths. Other problems arise in dual-mode imagers when attempting to align pixel data for the differing electromagnetic wavelengths. Despite known military and commercial value, dual-mode imagers have not gained wide acceptance.

SUMMARY

[0003] A multi-mode optical imager is provided as a common aperture device for multiple bandwidth imaging. By this design, a simple and compact optical system is formed for such imaging while maximizing image quality and resolution.

[0004] In one aspect, a multi-mode optical imager is provided for simultaneous visible light and infrared imaging. The multi-mode optical imager has fore-optics that may provide image magnification and may, for example, utilize a broadband optical system such as mirrored telescope design (e.g., a Newtonian reflective telescope or a Cassegrain reflective telescope). The fore-optics receive electromagnetic radiation from a field of view of the multi-mode optical imager and focus such radiation through a common aperture, into an imaging module, to form an intermediate image at a focal plane of the fore-optics. In one example, the f-number of the fore-optics is considered a "moderate" f-number, for example f/4. The fore-optics may be interchangeable with other fore-optics to provide user customizable imaging specifications (e.g., to customize focal length, magnification, filters, cold shielding, and/or other desired separation, such as a spectral or polarization state). After passing through the fore-optics and the common aperture, the electromagnetic radiation may be divided by the imaging module into two bands, one being a visible light wavelength band ("channel I") and another being an infrared wavelength band ("channel II"). In one aspect, the imaging module includes a beam-splitter or filter, such as a dichroic beam-splitter, to divide the two bands. The visible light wavelength band is directed to a first detector along channel I for visible imaging and the infrared wavelength band is directed to a second detector along channel II for infrared imaging.

[0005] Those of skill in the art will appreciate that the systems and methods described herein may be implemented to support imaging of other desired wavebands (e.g., ultraviolet (UV), near infrared (NIR), midwave infrared (MWIR), millimeter waves, etc.) other than the infrared wavelength and visible bands, and may also be implemented in more than two wavelength bands. For example, in one aspect the multi-mode optical imager forms more than two channels (e.g., channel I, II and III) within the imaging module to accommodate more than two wavelength bands (e.g., visible light waveband, long-wave infrared (LWIR) waveband, and MWIR waveband), each channel having a corresponding detector. In another example, the imaging module supports imaging in one or more wavebands (e.g., visible light waveband and LWIR waveband) and is removable, so that a user can replace one imaging module with another imaging module supporting one or more other wavebands (e.g., MWIR waveband and UV waveband). Accordingly, the multi-mode optical imager of one aspect supports multiple imaging modules selectable by a user to accommodate imaging of several wavebands in accordance with user needs. In one aspect, each imaging module supports dual-mode imaging, each with channel I and channel II supporting two separate wavebands.

[0006] In yet another aspect, the imaging module after the common aperture includes an f-number reducer that processes the infrared wavelength band after the intermediate image into a lower f-number (e.g., f/1) image for detection by an uncooled microbolometer array infrared detector. The f-number reducer may be accomplished by several methods or combination of methods, for example: a) optical re-imaging and magnification reduction through transmissive lenses; b) a fiber optic taper; c) micro-optics of the microbolometer array image detector; d) an array of Compound Parabolic Concentrators (CPC); and/or (e) an array of hollow tapered capillaries.

[0007] Certain uncooled microbolometer array infrared detectors operate better with an f-number of about f/1. As one skilled in the art would appreciate, improvements in uncooled microbolometer infrared detectors may facilitate additional techniques of f-number reduction, or even eliminate f-number reduction within the imaging module. In one aspect, the imaging module does not substantially modify, or alternatively increase, the f-number of the infrared wavelength band after the intermediate image, so as to be nearly identical in f/# to the visible light waveband. The f-number reducer may be constructed of germanium or other infrared lens material (e.g., IR fused silica, zinc selenide, calcium fluoride, AMTIR-1).

[0008] In still another aspect, the divided channels I, II (e.g., for visible light and infrared wavebands) may include imaging optics to condition the visible light wavelength band and/or the infrared wavelength band. Such conditioning may, for example include: modifying f-number, modifying magnification, providing cold shielding, providing filtering, and/or providing spectral separation (e.g., hyperspectral imaging).

[0009] In another aspect, the detectors and imaging optics are combined into the monolithic imaging module. The imaging module has an interchangeable interface to facilitate attachment to different fore-optics. The different fore-optics may thus provide selectable optical characteristics, e.g., wide-to-narrow fields of view, microscopy, and/or other system features described herein.

[0010] Once the multi-mode optical imager is pointed at a target, additional information may be gathered about the target. In one aspect, a distance finder provides distance-to-target information to an operator. In one aspect, distance finding is performed via Doppler Shift, for applications such

as astronomical observations: the Doppler Shift is generated by a signal emitted and received by the multi-mode optical imager. In another aspect, distance finding includes a time lapse determination between an emitted signal (e.g., from a laser within the multi-mode optical imager) and subsequent reception of the signal by the multi-mode optical imager. The signal may be of any wavelength for which the multi-mode optical imager is receptive. In still another aspect, distance finding may utilize the origin of a signal emitted from the target, and/or calculated from reflective material "painted" on the target, to which the multi-mode optical imager illuminates with an internally generated radiation source. In one aspect, distance finder signals (e.g., LIDAR) from the multi-mode optical imager may be sent through the same fore-optics used for reception of electromagnetic radiation. Additional imaging devices within the imaging module may further provide friend-or-foe detection.

[0011] In another aspect, a global positioning system ("GPS") provides the operator with the location of the multi-mode optical imager. The direction of aim may be provided by a magnetic compass, gyroscopic compass, multiple GPS receivers, inclinometer, accelerometer, rate gyros, and/or magnetometer, for example. With the implementation of the distance finder and GPS, the multi-mode optical imager may thus provide the location of a target.

[0012] In another aspect, image stabilization is provided by mechanical or post-processing means. Target tracking may be provided independently or in collaboration with image stabilization means.

[0013] In another aspect, the multi-mode optical imager is coupled with a vehicle, such as an unmanned aerial vehicle (UAV) or truck, so that a target object may be imaged, identified and targeted during surveillance activities.

[0014] In one aspect, a LWIR channel within the imaging module may be removed and replaced with a MWIR channel, and vice versa. This provides a "swappable" channel configuration to provide additional choices for a user. Accordingly, a user may swap one imaging module for another, in one aspect, and/or swap one channel with another channel within a given imaging module, in another aspect.

[0015] In one aspect, the multi-mode optical imager provides automatic target recognition (ATR) to identify a certain object (e.g., a tank) depending on the types of spectral bands within a specific wavelength band (e.g., visible light spectral bands within visible light wavelength band) that are detected by a detector array. ATR is used in conjunction with imaging of other wavebands (e.g., infrared wavelength band) to better identify the object in many ambient conditions. Dual-mode imagers were originally conceived to be missile seekers, to improve the man in the loop target recognition, and for use with onboard ATR processors. However, most ATR processors are trained on visible light data (e.g., from satellite or reconnaissance plane), and have to use infrared missile data to finally identify a target and for homing in on the target. On the other hand, the multi-mode optical imager described herein gives the ATR the option to get visible light data, along with infrared data, for a more accurate identification of a target in various conditions (e.g., use visible light ATR during the day, infrared imaging at night, MMW imaging in foul weather, such as heavy precipitation).

[0016] The multi-mode optical imager of one aspect eliminates the need in the prior art to carefully align pixel data for differing wavelengths. By utilizing the common aperture for both the visible light waveband and the infrared waveband, the multi-mode optical imager can be formed as a smaller and more compact system with high optical sensitivity, as compared to the prior art.

BRIEF DESCRIPTION OF DRAWINGS

[0017] **FIG. 1** is a schematic illustration of one multi-mode optical imager;

[0018] **FIG. 2** is a schematic illustration of another multi-mode optical imager;

[0019] **FIG. 3** shows a compound parabolic concentrator in use with an optical detector;

[0020] **FIG. 4** is a perspective view of another multi-mode optical imager;

[0021] **FIG. 5** is a schematic illustration of another multi-mode optical imager having a hyperspectral imager within an imaging module;

[0022] **FIG. 6** is a schematic illustration of another multi-mode optical imager having a distance finder and a targeting laser;

[0023] **FIG. 7** is schematic illustration of another multi-mode optical imager and imaging module having MWIR, LWIR and visible detectors, and a distance finder;

[0024] **FIG. 8** shows another multi-mode optical imager in use with a ground mobile surveillance vehicle;

[0025] **FIG. 9** is a schematic illustration of another multi-mode optical imager having rate sensors;

[0026] **FIG. 10** shows another multi-mode optical imager in use with an unmanned aerial vehicle;

[0027] **FIG. 11** shows a process for imaging with one multi-mode optical imager;

[0028] **FIG. 12** shows another process for imaging with another multi-mode optical imager;

[0029] **FIG. 13** shows another process for imaging with another multi-mode optical imager;

[0030] **FIG. 14** shows a process for distance measurement and target marking with another multi-mode optical imager;

[0031] **FIG. 15A** shows another process for imaging with another multi-mode optical imager; **FIG. 15B** shows another process for distance measurement and target marking with another multi-mode optical imager;

[0032] **FIG. 16** shows a process for merging image data on a display;

[0033] **FIG. 17** shows a process for surveillance and targeting of a target object with another multi-mode optical imager on a ground mobile surveillance vehicle;

[0034] **FIG. 18** shows a process for providing image stabilization to multi-mode optical imager; and

[0035] **FIG. 19** shows another process for surveillance and targeting of a target object with another multi-mode optical imager on an unmanned aerial vehicle.

DETAILED DESCRIPTION OF DRAWINGS

[0036] **FIG. 1** shows one common aperture, multi-mode optical imager **10** for imaging electromagnetic radiation **12** encompassing two or more wavelength regions, such as visible light and infrared radiation. Fore-optics **14** magnify and direct electromagnetic radiation **12** into a common aperture **15** of multi-mode optical imager **10**; a focal point **17** of fore-optics **14** is seen in **FIG. 1**. A filter or beam-splitter **16**, positioned after the common aperture **15**, divides electromagnetic radiation **12** into a visible light wavelength band **18** and an infrared wavelength band **20**. Visible light wavelength band **18** is illustratively shown aligned along channel I and infrared wavelength band **20** is illustratively shown aligned along channel II. Channel I and channel II represent, respectively, optical axes along which visible wavelength band **18** and infrared wavelength band **20** are processed. For example, visible light wavelength band **18** is directed along channel I through a first field lens **22** and a magnifying or zoom lens **24** to a first optical detector **26** (or alternatively to a camera that detects visible light wavelength band **18**). Infrared wavelength band **20** is directed along channel II through a second lens **28** (e.g., a second field lens) and an f-number reducer **30** to a second optical detector **32** (or alternatively to a camera that detects long-wave infrared wavelength band **20**). Detection of visible light wavelength band **18** and infrared wavelength band **20**, by first optical detector **26** and second optical detector **32**, respectively, may be in the form of a still image at a certain point of time (i.e., when a shutter (not shown) opens, and subsequently closes, over common aperture **15** to allow electromagnetic radiation **12** therethrough) or a stream of video over a period of time.

[0037] In one embodiment, beam-splitter **16** (e.g., a dichroic beam-splitter **33**) divides electromagnetic radiation **12** entering through common aperture **15** into visible light and infrared wavelength bands **18**, **20**, respectively, along channels I and II. First field lens **22** and zoom lens **24** provide magnification capabilities for the visible spectrum imaging of visible light wavelength band **18** with first optical detector **26**. First field lens **22** directs visible light wavelength band **18** traveling from beam-splitter **16** to zoom lens **24**, which focuses visible light wavelength band **18** onto first optical detector **26**; zoom lens **24** facilitates zoom functionality to increase or decrease the magnification of the visible image captured by detector **26**, selectably. First optical detector **26** may be a CCD or CMOS array, or other detector sensitive to visible light. Infrared wavelength band **20** is directed by second lens **28** traveling from beam-splitter **16** to optics of f-number reducer **30**; f-number reducer **30** reduces the f-number of infrared wavelength band **20** prior to second optical detector **32**. F-number reducer **30** may also be configured to provide zoom function to increase or decrease the magnification of the infrared image captured by the detector **32**. Beam-splitter **16**, first field lens **22**, zoom lens **24**, first optical detector **26**, second lens **28**, f-number reducer **30** and second optical detector **32** may be combined into an imaging module **34** that couples with various fore-optics (e.g., fore-optics **14**) to capture and produce final images of electromagnetic radiation **12**. A housing **36** encases the components of imaging module **34**. First optical detector **26** and second optical detector **32** may, of course, be configured for sensitivity to wavebands other than visible light and infrared as a matter of design choice, depending on the desired image characteristics to be detected by multi-mode optical imager **10**. For example, other wavebands may include ultraviolet, near infrared and millimeter waves. These wavebands may be configured and processed in place of bands **18** and/or **20**, for example. Accordingly, multiple imaging modules **34** may include, for example, channels I and II that process preselected wavebands, wherein a user "swaps out" imaging module **34** with another module **34** to capture and image the desired electromagnetic spectrum **12**.

[0038] Housing **36** may be configured with an interface **38** for attachment of varying fore-optics **14**; such fore-optics **14** may provide a wide field of view, a narrow field of view, or any range therebetween, as a matter of design choice. In this way, housing **36** may accept fore-optics **14** that can be interchanged to alter multi-mode optical imager **10** focal length and zoom capabilities, and may thereby form, for example, a microscope or a telescope having a low f-number. A virtual focal plane **40** of fore-optics **14** is thus formed at interface **38**, and the location of focal point **17** within imaging module **34** may be controlled by the particular optical properties of fore-optics **14**. Furthermore, by this interface **38**, various imaging modules **34** having differing imaging characteristics—imaging ultraviolet and midwave infrared wavebands (3-5um), in one example—may be interchanged with fore-optics **14** to provide custom configuration in multiple bandwidth imaging with multi-mode optical imager **10**.

[0039] In one embodiment, fore-optics **14** are formed of broad band curved reflectors **42**, such as convex and/or concave mirrors, capturing a real image **17'** of electromagnetic radiation **12**. Reflective surfaces of reflectors **42** have a number of advantages over traditional refractive lenses when used with multi-mode optical imager **10**. First, refractive lenses have indexes of refraction that change drastically between differing wavelengths of electromagnetic radiation, such as visible light and LWIR, leading to complex optical designs in order to avoid misfocus in all of the wavebands. Secondly, the reflective surfaces of reflectors **42** have a shorter fore-optic length as compared to refractive lenses. Furthermore, the reflective surfaces of reflectors **42** provide the additional benefit of nearly identical optical properties across a broad spectrum of wavebands. The curved reflectors **42** gather the incident visible light and infrared wavebands of electromagnetic radiation **12** in a way as to provide the same optical power in both visible light and infrared wavebands, while avoiding the focusing problems of refractive lenses. In one example, the curved reflectors **42** may include a concave mirror **44** forming aperture **15**, and a convex mirror **46**. Incident electromagnetic radiation **12** reflects off of concave mirrors **44** and is directed to convex mirror **46**, which then focuses radiation **12** through aperture **15** and into imaging module **34**. The fore-optics **14** may for example be a Cassegrain mirrored telescope or a Newtonian mirrored telescope. Those of skill in the art will appreciate that other broad band fore-optics **14** may be chosen depending on the desired optical properties of the multi-mode optical imager **10**. Electromagnetic radiation **12** is focused by fore-optics **14** at focal point **17** forming a real intermediate image plane.

[0040] After passing through dichroic beam-splitter **33**, infrared wavelength band **20** encounters f-number reducer **30**. In one exemplary arrangement, fore-optics **14** produces an f/4beam of infrared wavelength band **20** prior to f-number reducer **30**; however, this f-number fore-optics **14** is a matter of design choice. F-number reducer **30** provides

magnification and f-number reduction so that, for example, second optical detector **32** of channel II may be an uncooled microbolometer array **48** to detect infrared wavelength band **20**. The f-number reduction of reducer **30** increase the image signal reducing the effect of secondary radiation (creating noise) within the detected image at second optical detector **32**, since secondary radiation may emanate from, for example, housing **36** of imaging module **34**. In one embodiment, f-number reducer **30** reduces the infrared wavelength band **20** to have an f-number that is matched to the requirement of uncooled microbolometer array **48** (e.g., f/1). F-number reducer **30** may include a number of transmissive lenses, shown as a pair of lenses **50** in **FIG. 1**. As a matter of design choice, f-number reducer **30** may alternatively or inclusively include fiber-optics (i.e., fiber optic bundle pulled to a taper), micro-optics located on uncooled microbolometer array **48** (see, e.g., **FIG. 3**), and/or other optics to provide magnification and f-number reduction. Lenses **50** of f-number reducer **30** may be fabricated of various optical materials, such as germanium, zinc selenide, calcium fluoride or AMTIR-1.

[**0041**] The production of high fidelity, broadband low f-number optics is known to be difficult. For this reason, f-number reducer **30** is positioned downstream from where infrared wavelength band **20** is divided off (i.e., downstream of beam-splitter **16**) such that only infrared wavelength band **20** is affected. Additionally, because beam-splitter **16** (i.e., dichroic beam-splitter **33**) and f-number reducer **30** each are designed to condition narrow wavebands, these conditioning optics can be relatively small—as compared to standard conditioning optics of the prior art—further lending to the lightweight and compact design of multi-mode optical imager **10**.

[**0042**] A post-processor **52** may also be provided in imaging module **34**. Post-processor **52** is coupled with first optical detector **26** and second optical detector **32** and may process digital image data representative of visible light and infrared wavelength bands captured by detectors **26**, **32**. Analysis by post-processor **52** may provide information about an object reflecting and/or emitting electromagnetic radiation **12**, such as physical dimensions of the object, thermal energy emitted by the object, imaging characteristics of the object, etc.

[**0043**] **FIG. 2** shows one embodiment of multi-mode optical imager **10** with visible light wavelength band **18** aligned along channel I and a midwave infrared wavelength band **54** aligned along channel II. Beam-splitter **16** divides electromagnetic radiation **12** entering through common aperture **15** into visible light and midwave infrared wavelength bands **18**, **54**, respectively, along channels I and II. Visible light wavelength band **18** is detected by first optical detector **26**, and midwave infrared wavelength band **54** travels through second lens **28**, which focuses band **54** onto second optical detector **32** for detection thereof. A cold shield **56** may extend between second lens **28** and second optical detector **32** to shield detector **32** from detecting electromagnetic radiation emitted within the housing **36** itself, ensuring accurate detection of the midwave infrared wavebands present in electromagnetic radiation **12**. The second lens **28** may also be cooled, further reducing the self emission radiation of the camera from the detected image. A post-processor, such as post-processor **52**, may be coupled with first optical detector **26** and second optical detector **32** and may process digital image data representative of visible light and midwave infrared wavelength bands captured by detectors **26**, **32**. Post-processor **52** may analyze reflected and/or emitted electromagnetic radiation **12** from an object to learn information about the object.

[**0044**] **FIG. 1** and **FIG. 2** collectively illustrate another feature provided by a multi-mode optical imager, in accord with one embodiment. Specifically, in the embodiment, midwave band **54** along channel II is "swapped" out with longwave band **20**, **FIG. 1**, to change which spectra of radiation **12** is imaged. By way of example, lens **28**, f-number reducer **30**, and detector **32** (e.g., microbolometer array **48**) of **FIG. 1** may be removed as a module assembly and replaced by lens **28**, cold shield **56** and detector **32** (e.g., a PtSi detector) of **FIG. 2** within module **34** as a matter of user preference.

[**0045**] The details of micro-optics **58** located on uncooled microbolometer array **48** (i.e., second optical detector **32**) are shown in **FIG. 3**, in accord with one embodiment. An array of concentrators **60**, preferably forming a series of compound parabolic concentrators **62**, are positioned adjacent to imaging pixels **64** of uncooled microbolometer array **48**. Each compound parabolic concentrator **62** forms a generally conically-shaped mirror that may be fabricated from various materials, such as high index germanium that is transparent to 7-14um infrared radiation and that has a high optical index which tends to facilitate detection of infrared wavelength band **20** by imaging pixels **64**. The optical function of the compound parabolic concentrators **62** increases the f-cone, and consequently reduces the f-number of the incident infrared radiation at the imaging pixels **64**. Accordingly, compound parabolic concentrators **62** provide certain advantages as compared to the prior art, including: allowing for smaller lenses within multi-mode optical imager **10** to produce the desired f-number at the uncooled microbolometer array **48**; and reducing the size of imaging pixels **64** to increase the signal-to-noise ratio of multi-mode optical imager **10**, making imager **10** more sensitive to LWIR of radiation **12**. Moreover, by shifting the series of compound parabolic concentrators **62** directly off of imaging pixels **64** (i.e., adjacent to the pixels), the infrared wavelength band **20** is easily shuttered, aiding in calibration of multi-mode optical imager **10**. In one embodiment, this shuttering is accomplished by a piezo-electric element **65** that expands and contracts, under control of imager **10**, to shift, cyclically, concentrators **62** further from and then closer to pixels **64**. As an alternative to the compound parabolic concentrators **62**, an array of hollow tapered capillaries (not shown) may be positioned before second optical detector **32** to further reduce the f-number of longwave infrared wavelength band **20**. Micro-optics **58**, such as compound parabolic concentrators **62**, may also be implemented with detectors for other wavebands, thereby increasing the signal-to-noise radio in a similar fashion.

[**0046**] An exemplary multi-mode optical imager **150**, having optical components similar to those of multi-mode optical imager **10**, is shown in **FIG. 4**. Multi-mode optical imager **150** forms a camera **152** for capturing and imaging visible light and infrared wavelength bands. Fore-optics **14'** are shown coupled to housing **36'** of imaging module **34'**, which encases the internal optics (not shown), such as image splitter **16**, first optical detector **26**, f-number reducer **30** and second optical detector **32** of **FIG. 1**, for capturing visible

light wavelength band **18** and infrared wavelength band **20**, likewise of **FIG. 1**, to process and/or image multi-mode images. A shutter (not shown) is actuated to initiate image capture by allowing visible light and infrared wavelength bands to enter into imaging module **34'**. This shutter may be used for periodic calibration of the visible and IR detector arrays, or may be, for example, installed only in an IR channel (e.g., channel II, **FIG. 1**) to allow for calibration of the IR channel alone. Electronics **154** (e.g., a microprocessor) couple with first optical detector **26** and second optical detector **32** to process the detected images in visible light wavelength band **18** and infrared wavelength band **20**, such that a visual representation of the detected images may be shown, for example, on a display screen **156**. Display screen **156** may for example be an LCD display positioned on optical imager **150**, though those skilled in the art will appreciate that display screen **156** may also be positioned remote to imager **150** as a matter of design choice. Input buttons **158** may also be positioned on optical imager **150** and coupled with electronics **154**, such that user selections on input buttons **158** may guide image capture by optical imager **150** and the characteristics and functions of display screen **156** (e.g., display of images of visible light wavelength band **18** and/or infrared wavelength band **20**, overlay a map to determine location of object emitting and/or reflecting electromagnetic radiation **12** detected by optical imager **150**, etc.).

[**0047**] In addition to the aforementioned components, imaging module **34** of multi-mode optical imager **10** may be equipped with various optics for conditioning of the visible light wavelength band **18** and the infrared wavelength band **20**, so as to change the magnification, provide cold shielding, provide optical filtering, and/or provide desired spectral separation (e.g., for FTIR imaging, Hyperspectral imaging, or Raman spectroscopy). Thus, imaging module **34** may become a core component for a multi-mode optical imager for various applications, including: missile seekers/guidance, head mounted imagers, vehicle mounted imagers, stationary imagers, ground patrols, imagers for airborne reconnaissance (manned and unmanned vehicles, such as airplanes), friend-or-foe detection, surveying, bio-instrumentation, microscopy, substance detection (e.g., for homeland defense) and/or biological applications (e.g., tissue imaging).

[**0048**] In one embodiment, shown in **FIG. 5**, a hyperspectral imager **66** is positioned within imaging module **34**; hyperspectral imager **66** provides spectral separation of visible light wavelength band **18** into a diffracted spectrum band **68**, for high precision sensing of the visible light wavelength portion of the electromagnetic radiation **12** given off by an object in the field of view of multi-mode optical imager **10**. Hyperspectral imager **66** includes: a collimator **70** that collimates visible light wavelength band **18** after splitting at beam-splitter **16**; a dispersing element **72**, such as a diffraction grating or a prism, that separates various wavelengths of radiation within visible light wavelength band **18** into diffracted spectrum band **68**; and an imaging lens **74** that focuses diffracted spectrum band **68** onto a visible detector array **76** to capture and image diffracted spectrum band **68** of visible light. Detector array **76** may be one-dimensional, providing spectral separation of diffracted spectrum band **68**, or may be two-dimensional, providing both spectral and spatial separation of band **68**. In a similar way this may be applied to hyperspectral imaging in the infrared bands using an infrared detector array in place of the visible light detector array. Those skilled in the art appreciate that hyperspectral imager **66** may further include a slit or array of micro lenslets (e.g., at location **19**) that reduce the field of view thereof. A post processor **78** may also be coupled with detector array **76** for analysis of the captured diffracted spectrum band **68** (post processor **78** may for example be incorporated with or within processor **52**, **FIG. 1**). For example, such analysis by post processor **78** may include examining the particular visible light wavelengths detected to aid in determining the chemical composition of an imaged object. Additional information can be obtained about the imaged object by coupling second optical detector **32** detecting infrared wavelength band **20** to post processor **78**. By, for example, overlaying the detected image of infrared wavelength band **20** with the detected image of visible light wavelength band **18**, the visual picture of the imaged object may be obtained while also viewing the heat signature (i.e., infrared radiation) emitted and/or reflected by the object. The overlaying of bands **18**, **20** provides the feature of, for example, visual and thermal imaging (i.e., visual picture and heat signature). Visual and thermal imaging may be used to provide day/night target detection. Thus, with multiple waveband imaging, superior target detection is achieved because a range of ambient conditions (e.g., high/low levels of visible light) will not defeat the imaging abilities of imaging module **34**.

[**0049**] To further control hyperspectral imagery, imaging module **34** may be provided with input buttons **80**, similar to input buttons **158** of **FIG. 4**, and a controller **82**, such as a microprocessor, to direct the processing by post-processor **78** according to user input to buttons **80**. Controller may also control detector array **76** (and/or other detectors of imaging module **34**), including, for example, shuttering operations of imager **34**. Controller **82** may be incorporated with or within post-processor **78** as a matter of design choice. If a user desires to have information about an imaged object, one or more input buttons **158** may be depressed to instruct controller **82** to direct the processing by post-processor **78** of an image captured by hyperspectral imager **66**. For example, post-processor **78** may be pre-programmed digitally with automatic target recognition (ATR) to identify a certain object (e.g., a tank) depending on the types of visible spectral bands within visible light wavelength band **18** that are detected by detector array **76**. Upon the user depressing one or more of input buttons **80**, controller **82** directs hyperspectral imager **66** to detect the visible light wavelength band **18**, and second optical detector **32** to detect the infrared wavelength band **20**, such that the images may be viewed on, for example, a display screen (i.e., display screen **156**). The image may, of course, include still pictures or a stream of video pictures (e.g., MPEG) captured by multi-mode optical imager **10**. Further identification or enhanced recognition of imaged objects may be achieved by processing the image detected by second optical detector **32** and, for example, overlaying the image with the image captured by hyperspectral imager **66**.

[**0050**] Other components and systems may be incorporated into, or interfaced with, multi-mode optical imager **10**. **FIG. 6** shows a distance finder **200**, such as a laser ranger, and a targeting laser **202** in imaging module **34** of multi-mode optical imager **10**. One or both of distance finder **200** and targeting laser **202** may be located in multi-mode optical imager **10** as a matter of design choice. Distance finder **200**

and/or targeting laser **202** operate when multi-mode optical imager **10** is aimed such that fore-optics **14** are aligned with a target object **204**. In one embodiment, distance finder **200** sends a signal **206** out of multi-mode optical imager **10** through the common aperture **15** and fore-optics **14** used to capture electromagnetic radiation **12**. The reflection of signal **206** off of target object **204** is then received by distance finder **200** in multi-mode optical imager **10**. In this way, distance finder **200** provides the distance to target object **204** and communicates that distance to an operator of multi-mode optical imager **10**. Distance finding may be performed via Doppler-shift, for applications such as astronomical observations, or time lapsed between the emission of signal **206** and the reception by the multi-mode optical imager **10**. Signal **206** may be of any wavelength for which the multi-mode optical imager **10** is receptive, including laser, LIDAR and RADAR (e.g., millimeter waves). The origin of signal **206** may be from the target itself or from radiation reflected from a reflector "painted" on the target from imager **10** or another emitter linked to generate the radiation. Similar to distance finder **200**, targeting laser **202** sends a laser beam **208** out of multi-mode optical imager **10** through common aperture **15** and fore-optics **14** to place a marker **210** on target object **204** for detection by multi-mode optical imager **10** or another system at a different location. In this way, another system, such as a missile guidance system, may detect marker **210** on target object **204**, through surveillance or in communication with multi-mode optical imager **10**, and may launch an attack against target object **204**.

[**0051**] To transmit signal **206** and laser beam **208** out of multi-mode optical imager **10**, a pair of beam-splitters or reflectors **212** are positioned within imaging module **34**. Reflectors **212** may, for example, be sensitive to specific wavelengths of electromagnetic radiation, such as near infrared wavelengths (~1.5 um) in signal **206** and laser beam **208**, to reflect such wavelength bands **206**, **208** out of aperture **15** and through fore-optics **14** to target object **204**. Input buttons **214** may be provided on housing **30** to provide an input means for a user to select a distance request to a sighted target object **204** by distance finder **200** and/or placing a targeting marker **210** on a sighted target object **204** by targeting laser **202**. A controller **216**, which may be microprocessor controlled, for example, receives the user selections from input button **214** and generates command signals communicated to distance finder **200** and targeting laser **202** for operation thereof based on the user input. Controller **216** may also control detectors **26**, **32** and any shuttering operations, as a matter of design choice.

[**0052**] Those skilled in the art appreciate that reflectors **212** may be positioned directly within channels I, II as beam-splitters, similar to splitter **33**.

[**0053**] **FIG. 7** shows one embodiment of imaging module **34** with a global positioning system ("GPS") **300** providing the operator with the location of the multi-mode optical imager **10** relative to the earth and the orientation of the field of view. Imaging module **34** may have the same fore-optics **14** attached thereto as the multi-mode optical imager **10** of **FIG. 1**. The direction of aim of fore-optics **14** of multi-mode optical imager **10** may be provided by orientation sensors, for example, a pointing and compass sensor **302**; such orientation sensors may also include a magnetic compass, gyroscopic compass, multiple GPS receivers, angle sensors (e.g., inclinometer), attitude resolver, accelerometer or other inertial sensors with GPS **300**, rate gyros or magnetometer. Distance finder **200** may also be coupled with GPS **300** to determine the location of a target object **204** cited with multi-mode optical imager **10**.

[**0054**] Imaging module **34** is shown in **FIG. 7** to have channel I along which visible light wavelength band **18** is aligned, channel II along which a long-wave infrared wavelength band **84** is aligned, and channel III along which midwave infrared wavelength band **54** is aligned. Electromagnetic radiation **12** is first split by beam splitter **16** into visible light wavelength band **18** and infrared wavelength band **20**; infrared wavelength band **20** travels to a second beam splitter **86** dividing infrared wavelength band **20** into long-wave infrared wavelength band **84** and midwave infrared wavelength band **54**. Distance finder **200**, in the form of output and input laser rangers **304**, **306** in **FIG. 7**, sends and receives, respectively, laser signals **308** partially along channel I with visible light wavelength band **18**. Visible light wavelength band **18** encounters first field lens **22** and one or more zoom lenses **24** to focus a visible image of radiation onto first optical detector **26**, in a similar fashion to multi-mode optical imager **10** of **FIG. 1**. Along channel III, midwave infrared wavelength band **54** travels through second lens **28**, which focuses band **54** onto a MWIR detector array **88** (e.g., an InSb array) for detection thereof. A cold shield **56** extends between lens **28** and the MWIR detector array **88**, as described in **FIG. 2**. In channel II, f-number reducer **30** reduces the f-number of the long-wave infrared wavelength band **84** to match the f-number of the second optical detector **32** , such as uncooled microbolometer array **48**. Output laser ranger **304**, input laser ranger **306**, first optical detector **26**, MWIR detector array **88** and uncooled microbolometer array **48** may all couple with a controller or processor **90**, as shown. Processor **90** may perform post-processing on images detected by first optical detector **26**, second optical detector **32**, and MWIR detector array **88** for display for a user on a display screen **94** coupled with processor **90**. Processor **90** may also process data from output laser ranger **304**, and input laser ranger **306**, and utilize (a) a GPS determined location of imaging module **34** relative to the earth, and (b) sensed data from orientation sensors (e.g., pointing and compass sensor **302**) to determine the location of target object **204**. A wireless transmitter **92** and antenna **93** may couple with processor **90** to transmit captured image data, distance from target object data, GPS location of imaging module **34**, and/or location of target object **204**, to remote receivers, such as an intelligence command center at a military base.

[**0055**] Because orientation sensors (e.g., pointing and compass sensor **302**) provide the angular orientation of multi-mode optical imager **10** aimed at target object **204**, and distance finder **200** provides the distance measured by distance finder **200** to target object **204**, the position of target object **204** relative to multi-mode optical imager **10** is determined. This relative position information is then added to the position of the multi-mode optical imager **10** as determined by GPS **300** relative to the earth, to position target object **204** at an absolute location on earth. Alternatively, GPS **300** may be programmed to further determine the position of multi-mode optical imager **10** relative to another coordinate system formed on a map, such as a map of a country or a portion thereof. In this way, target object **204**, through distance finder **200** and GPS **300**, may be positioned relative to the coordinate system of the map.

Further, the map may be formed on display screen **94** for viewing thereof by a user of imaging module **34**. Multiple display screens **94** may be provided with imaging module **34** in **FIG. 7**, one display screen for each still image or video stream detected by each of first optical detector **26**, second optical detector **32**, and MWIR detector array **88**. Alternatively, video streams detected by detectors **36**, **32**, **88**, may be merged for display on a single display screen **94**, in accord with the following examples: (1) the detected visible light wavelength band **18** video stream is multiplied by the detected midwave infrared wavelength band **54** video stream and detected long-wave infrared wavelength band **84** video stream; (2) the video streams are overlayed; and (3) the midwave infrared wavelength band **54** video stream and long-wave infrared wavelength band **84** video stream are processed by processor **90** to derive the outlines of target object **204**, while visible light wavelength band **18** video stream provides the visible image of target object **204**.

[**0056**] Multi-mode optical imager **10** of **FIG. 7** may also have input buttons **310** on housing **30** of imaging module **34**, similar to input buttons **214** of **FIG. 6**, to provide an input means for a user to select a distance request to a sighted target object **204** by distance finder **200**, to initiate a GPS determination, and/or to select a map for display on display screen **94**. Processor **90** may also receive the user selections from input buttons **214** and generate command signals communicated to distance finder **200** and GPS **300** for operation thereof based on the user input. The input commands described above may also be input by remote control (e.g., radio control).

[**0057**] **FIG. 8** shows multi-mode optical imager **10** in use with an imaging module such as imaging module **34** of **FIG. 7**. Multi-mode optical imager **10**, **FIG. 8**, is mounted onto a ground mobile surveillance vehicle **400**, such as a military truck. Electromagnetic radiation **12** emitted from, and/or reflected off of, a target object **402** is first detected by multi-mode optical imager **10**. The target object **402** is then analyzed through one or a plurality of channels I, II, III, to process the image. One of the channels (e.g., channel I) may alternatively include hyperspectral capability as in **FIG. 5**. The analyzed target object may thus identify, for example, a particular structure such as a missile launcher within target object **402**. By way of example, multi-mode optical imager **10**, **FIG. 8**, of one embodiment includes post-processor **78** of **FIG. 5**; post-processor **78** is programmed with ATR to identify the structure of target object **402** within a video stream and to process a still image of hyperspectral array **66** and/or second optical detector **32** of target object **402**. The still image of target object **402** may additionally be transmitted by a transmitter (e.g., transmitter **92**, **FIG. 7**) to a base intelligence station **404**.

[**0058**] In another example, a GPS determination is made by GPS **300** for multi-mode optical imager **10**, **FIG. 8**. Approximately simultaneously with the GPS determination, or immediately thereafter, distance finder **200** determines the distance to target object **402**. Knowing the orientation of multi-mode optical imager **10** in 3-dimensional space, determined by orientation sensors (e.g., pointing and compass sensor **302**) and inertial sensors with GPS **300**, and the distance to target object **402**, the absolute location of target object **402** relative to the earth is determined. This information may then be relayed by a user of multi-mode optical imager **10**, or by a transmitter provided with optical imager **10** (e.g., wireless transmitter **92**), to base intelligence station **404**; base intelligence station **404** may then examine one or more images of target object **402** to determine if such object should be investigated and/or attacked. Alternatively, the absolute location of target object **402** may be transmitted from multi-mode optical imager **10** directly to an aerial vehicle (e.g., a fighter plane **406**) that may investigate target object **402** and/or launch an attack on target object **402** at the known location thereof.

[**0059**] In **FIG. 9**, multi-mode optical imager **10** is shown with one or more rate sensors **500** for providing image stabilization. Rate sensors **500** measure the rate of change of movement or rotation of multi-mode optical imager **10**. Data gathered by rate sensors **500** may be used to mechanically stabilize the image by various means, such as actuators **502**; actuators **502**, in communication with rate sensors **500** and first and second optical detectors **26**, **32**, may control small motors (not shown) that move optics internal of imaging module **34** or first and second optical detectors **26**, **32**, to maintain a steady image captured by detectors **26**, **32**. Rate sensors **500** may also communicate with a post processor **504**. Post processor **504** receives the captured images from first optical detector **26** and second optical detector **32**, and with the data received from rate sensors **500**, determines how the captured images should be adjusted to account for motion instability. A button interface **506**, similar to button interface **214** of **FIG. 6**, provides an input mechanism for a user to select image stabilization functions. Likewise, a controller **508**, similar to controller **216** of **FIG. 6**, receives the user selections from button interface **506** and generates command signals communicated to rate sensors **500**, actuators **502** and post-processor **504** for operation thereof based on the user input. Controller **508** may also, while directing image stabilization by actuators **502** and/or post processor **504**, direct the aiming of multi-mode optical imager **10** at a moving target **510**. Orienting motors **512** may be controlled by controller **508** and coupled with housing **36** to move multi-mode optical imager **10** such that fore-optics **14** are constantly aimed at moving target **510**. It is to be understood that post-processor **504** may be incorporated into controller **508** as a matter of design choice.

[**0060**] **FIG. 10** shows another use of multi-mode optical imager **10** with an unmanned aerial vehicle (UAV) **600**, such as for military reconnaissance. Multi-mode optical imager **10** is encased in housing **602** and may include, for example, fore-optics **14** and imaging module **34** of **FIG. 1**; it may additionally include distance finder **200** and targeting laser **202** of **FIG. 6**, and/or GPS **300** of **FIG. 7**, for example. A target object **604** may be imaged by multi-mode optical imager **10** into two or more different electromagnetic radiation wavelength bands, such as visible light wavelength band **18** and infrared wavelength band **20** of **FIG. 1**, to determine certain characteristics about the target object **604** (e.g., object dimensions, thermal energy radiated, etc.). The distance from multi-mode optical imager **10** to target object **604** may be determined by distance finder **200**, and in conjunction with GPS **300**, the actual position of target object **604** on earth is determined. Targeting laser **202** may also be used to place a marker **606** on target object **604**, so that target object **604** may be identified by other systems for further imaging and/or to guide a projectile (e.g., an armed missile) to target object **604**.

[0061] Another use of multi-mode optical imager **10** is for terminal guidance of missiles. Either transmitting images to ground operators for remote controlled target selection or with onboard automatic target recognition processor for target identification, selection and guidance. The multi-band nature of imager **10** provides the advantage of excellent visible images and/or hyperspectral images for accurate target detection during the day, infrared images for night operations and MMW sensing for foul weather operation.

[0062] **FIG. 11** shows a process **700** for imaging visible light wavelength band **18** and infrared wavelength band **20** with multi-mode optical imager **10**. Process **700** for example includes certain software functions and/or routines controlling a multi-mode optical imager, such as image capture, shuttering, data synthesis and/or image processing to facilitate each described step. At step **702**, fore-optics **14** magnify and direct incident electromagnetic radiation **12** from an object into common aperture **15** and to beam-splitter **16**, which divides electromagnetic radiation into visible light wavelength band **18** and infrared wavelength band **20**. First field lens **22** and zoom lens **24** then magnify and focus visible light wavelength band **18** along Channel I onto first optical detector **26** for detection thereof, at step **704**. Likewise, second lens **28** and f-number reducer **30** focus infrared wavelength band **20** along Channel II and match the f-number of infrared wavelength band **20** to the f-number required by second optical detector **32** for detection thereof, at step **706**. At step **708**, post-processor processes the detected image data from visible light wavelength band **18** and infrared wavelength band **20** to, for example, display visible light and/or infrared image data on a display screen, and/or to analyze certain imaging characteristics of the object.

[0063] Another process **800** for imaging with multi-mode optical imager **10** is shown in **FIG. 12** for detection of visible light wavelength band **18** and midwave infrared wavelength band **54**. Process **800** for example includes certain software functions and/or routines controlling a multi-mode optical imager, such as image capture, shuttering, data synthesis and/or image processing to facilitate each described step. At step **802**, fore-optics **14** magnify and direct incident electromagnetic radiation **12** from an object into common aperture **15** and to beam-splitter **16**, which divides electromagnetic radiation into visible light wavelength band **18** and midwave infrared wavelength band **54**. First optical detector **26** receives visible light wavelength band **18** along Channel I for detection thereof, at step **804**. Midwave infrared wavelength band **54** travels along Channel II and is focused by second lens **28** onto second optical detector **32** for detection thereof, at step **806**. At step **808**, post-processor **52** processes the detected image data from visible light wavelength band **18** and midwave infrared wavelength band **54** to, for example, display visible light and/or midwave infrared image data on a display screen, and/or to analyze certain imaging characteristics of the object.

[0064] Those skilled in the art appreciate that process **700** and **800** of **FIG. 11** and **FIG. 12**, respectively, may be combined within common software functionality to accommodate, for example, "swap out" of the MWIR channel (of process **800**) with a LWIR channel (of process **700**), and that processing steps may be physically separated from the detection steps by telemetry (e.g., radio link).

[0065] **FIG. 13** shows another process **900** for imaging visible light wavelength band **18** and infrared wavelength band **20** with multi-mode optical imager **10** for enhanced imaging of an object. Process **900** for example includes certain software functions and/or routines controlling a multi-mode optical imager, such as image capture, shuttering, data synthesis and/or image processing to facilitate each described step. At step **902**, fore-optics **14** magnify and direct incident electromagnetic radiation **12** from an object into common aperture **15** and to beam-splitter **16**, which divides electromagnetic radiation **12** into visible light wavelength band **18** and infrared wavelength band **20**. Hyperspectral imager **66** collimates visible light wavelength band **18**, separates band **18** into various wavelengths of radiation within the visible spectrum with dispersing element **72** (e.g., a prism or a grating) to form diffracted spectrum band **68**, and focuses diffracted spectrum band **68** onto visible detector array **76** for detection thereof, at step **904**. Infrared wavelength band **20** reaches f-number reducer **30**, which focuses infrared wavelength band **20** onto second optical detector **32** for detection thereof and matches the f-number of infrared wavelength band **20** with the f-number of detector **32**, in step **906**. At step **908**, post-processor processes the detected image data from diffracted spectrum band **68** and infrared wavelength band **20**. Processing step **908** may include, for example, analyzing the particular visible wavelengths detected in diffracted spectrum band **68** to determine the chemical composition of an imaged object, analyzing the infrared wavelength band **20** detected to determine the type of imaged object based on a heat signature (e.g., a tank, missile launcher, etc.). Optionally, at step **910**, a user may make selections on input buttons **80** to initiate commands for controller **82** to direct processing by post-processor **78**. For example, at step **912**, controller **82** commands post-processor **78** to identify a certain targeted object with automatic target recognition (ATR) based on the detected visible spectrum bands within diffracted spectrum band **68**. At step **914**, the detected image data from diffracted spectrum band **68** and infrared wavelength band **20** are displayed on a display screen (e.g., display screen **156**, **FIG. 4**).

[0066] Another process **1000** is shown in **FIG. 14** for determination of distance from multi-mode optical imager **10** to a target object **204**, and to place marker **210** on the target object **204**. Process **1000** for example includes certain software functions and/or routines controlling a multi-mode optical imager, such as image capture, shuttering, data synthesis and/or image processing to facilitate each described step. At step **1002**, a user will first aim multi-mode optical imager **10**, more specifically fore-optics **14**, at an object for distance measurement from optical imager **10** and/or targeting of the object (i.e., target object **204**); step **1002** may consist of imaging electromagnetic radiation **12** emitted from, and/or reflected off of, target object **204**, such as by one of processes **700** of **FIG. 11**, **800** of **FIG. 12**, or **900** of **FIG. 13**. A user will initiate a command by selecting one or more input buttons **214**, at step **1004**. A determination is then made by controller **216**, at step **1006**, as to what input button **214** has been selected. If an input button **214** associated with measurement of the distance from multi-mode optical imager **10** to target object **204** is selected, at step **1008**, then distance finder **200**, at step **1010**, makes a time measurement and simultaneously transmits a signal **206** reflecting off of reflector **212** and fore-optics **14** to travel to target object **204**. At step **1012**, signal **206** is reflected back

off of target object **204** and is received by fore-optics **14** and reflected off of reflector **212** for reception by distance finder **200** while simultaneously noting the time of reception. Then, at step **1014**, a calculation is made, based on the elapsed time, of the distance to target object **204**. Returning to step **1006**, if an input button **214** associated with placing of marker **210** on target object **204** is selected, at step **1016**, then targeting laser **202**, at step **1018**, transmits a laser beam **208** reflecting off of reflector **212** and fore-optics **14** to travel to target object **204** and place marker **210** thereon.

[0067] **FIGS. 15A and 15B** show another process **1100** for multiple bandwidth imaging with imaging module **34**. Process **1100** for example includes certain software functions and/or routines controlling a multi-mode optical imager, such as image capture, shuttering, data synthesis and/or image processing to facilitate each described step. At step **1102**, electromagnetic radiation **12** entering imaging module **34** from, for example, fore-optics **14**, is directed to beam-splitter **16**, which divides electromagnetic radiation **12** into visible light wavelength band **18** and infrared wavelength band **20**. First field lens **22** and zoom lens **24** then magnify and focus visible light wavelength band **18** along Channel I onto first optical detector **26** for detection thereof, at step **1104**. Infrared wavelength band **20** then encounters second beam splitter **86**, at step **1106**, splitting band **20** into long-wave infrared wavelength band **84** and midwave infrared wavelength band **54**. At step **1108**, long-wave infrared wavelength band **84** travels along Channel II and reaches f-number reducer **30**, which focuses band **84** onto second optical detector **32** (i.e., uncooled microbolometer array **48**) for detection thereof and matches the f-number of band **84** to the f-number of second optical detector **32**. At step **1110**, midwave infrared wavelength band **54** travels along Channel III and is focused by second lens **28** onto MWIR detector array **88** for detection thereof. Processor **90** may perform post-processing on image data detected by first optical detector **26**, second optical detector **32**, and MWIR detector array **88**, at step **1112**. Post-processed image data detected by first optical detector **26**, second optical detector **32**, and MWIR detector array **88**, may each be displayed on a separate display screens **94**, or the image data may be combined for display on a single display screen **94**, at step **1114**; such post-processed image data may also be compressed using computer data compression techniques, in step **1116**, and transmitted by transmitter **92** to a location remote from imaging module **34** (e.g., intelligence command center), in step **1118**.

[0068] Process **1100** may be continued, as shown in **FIG. 15B**, if it is desired to determine the location of target object **204** imaged by first optical detector **26**, second optical detector **32**, and MWIR detector array **88**. At step **1120**, a user will initiate a command by selecting one or more input buttons **310**. Processor **90** will then determine, at step **1122**, based on the selected input buttons **214**, if a measurement of the distance from imaging module **34** to target object **204** with distance finder **200** is desired, a position of imaging module **34** relative to the earth with GPS **300** is desired, or whether a position of target object **204** relative to imaging module **34** and/or the earth is desired. If a measurement of the distance from imaging module **34** to target object **204** with distance finder **200** is selected, then, at step **1124**, output laser ranger **304** of distance finder **200** makes a time measurement (i.e., time of transmission) and simultaneously transmit a signal **308** reflecting off of a reflector and travel along Channel I, then reflecting off of beam-splitter **16** and, optionally, fore-optics **14** to travel to target object **204**. At step **1126**, signal **308** is reflected back off of target object **204** and is received by, optionally, fore-optics **14**, reflected off of beam-splitter **16** along Channel I and off of a reflector for reception by laser ranger input **306** and a time of reception noted. Then, at step **1128**, a calculation is made, based on the time registered by the output laser ranger **304** and input laser ranger **306**, that determines the distance to target object **204**.

[0069] Returning to step **1122**, if alternatively, it is determined that the position of imaging module **34** with GPS **300** is selected, then, at step **1130**, GPS **300** receives a signal from a satellite network to determine the location of imaging module **34** relative to the earth.

[0070] Returning to step **1122**, if alternatively, it is determined that the position of target object **204** relative to imaging module **34** and/or the earth is selected, then at step **1132**, GPS **300** receives a signal from a satellite network to determine the location of imaging module **34** relative to the earth approximately simultaneously with distance finder **200** performing steps **1124** through **1128**, and with one or more orientation sensors (e.g., pointing and compass sensor **302** or inertial sensors with GPS **300**) determining the angular orientation of imaging module **34** and attached fore-optics **14**. Then, at step **1134**, the relative position of target object **204** to imaging module **34** is calculated from the distance determined by distance finder **200** and the angular orientation in three-dimensional space determined by the one or more orientation sensors. At step **1136**, the relative position of target object **204** is then added to the position of imaging module **204** relative to the earth with GPS to calculate the position of target object **204** relative to earth.

[0071] At step **1138**, any of values determined in steps **1128**, **1130**, **1134** and/or **1136** representative of the distance from imaging module **34** to target object **204**, position of imaging module **34** relative to the earth, and/or position of target object **204** relative to imaging module **34** and/or the earth, respectively, may be displayed on display screen **94** for a user. Optionally, at step **1140**, an electronic map display may be placed on display screen and any of such values determined in steps **1128**, **1130**, **1134** and/or **1136** may be displayed on the map such that the position of imaging module **34** and/or target object relative to a coordinate system of the map may be determined.

[0072] At step **1142**, such values determined in steps **1128**, **1130**, **1134** and/or **1136** may be transmitted by transmitter **92** through antenna **93** to a location remote from imaging module **34**.

[0073] **FIG. 16** shows another process **1200** for merging image data detected by first optical detector **26**, second optical detector **32**, and MWIR detector array **88** as video streams into a single display on, for example, display screen **94**. Process **1200** for example includes certain software functions and/or routines controlling a multi-mode optical imager, such as image capture, shuttering, data synthesis and/or image processing to facilitate each described step. At step **1202**, processor **90** receives the detected image data from detectors **26**, **32** and **88**. At step **1204**, visible light wavelength band **18** video stream is multiplied by the midwave infrared wavelength band **54** video stream and long-wave infrared wavelength band **84** video stream. At

step **1206**, the video streams of bands **18**, **54** and **84** are overlayed. At step **1208**, midwave infrared wavelength band **54** video stream and long-wave infrared wavelength band **84** video stream are processed by processor **90** to derive the outlines of target object **204**. Finally, at step **1210**, visible light wavelength band **18** video stream is processed by processor **90** to derive the visible image of target object **204**.

[**0074**] Another process **1300** is provided for surveillance and targeting of a target object **402**, as shown in **FIG. 17**. Process **1300** for example includes certain software functions and/or routines controlling a multi-mode optical imager, such as image capture, shuttering, data synthesis and/or image processing to facilitate each described step. At step **1302**, ground mobile surveillance vehicle **400**, having multi-mode optical imager **10** mounted thereon, is driven to a location to sight target object **402**. At step **1304**, target object **402** is sighted and the electromagnetic radiation **12** emitted from, and/or reflected off of, target object **402**, is detected by, for example, one of processes **700** of **FIG. 11**, **800** of **FIG. 12**, **900** of **FIG. 13**, or **1100** of **FIG. 15**. Optionally, at step **1306**, post-processor (e.g., post-processor **78**, **FIG. 5**) may be pre-programmed with ATR to identify target object **402** within a video stream and direct a still image capture by, for example, first optical detector **26**, second optical detector **32**, hyperspectral array **66**, and/or MWIR detector array **88**. Further, as an optional step **1308**, the still image captured of target object **402** is transmitted to base intelligence station **404**. At step **1310**, distance finder **200** and/or GPS **300** are used to determine distance from multi-mode optical imager **10** to target object **204**, position of multi-mode optical imager **10** relative to the earth, and/or position of target object **204** relative to multi-mode optical imager **10** and/or the earth, in accord with process **1100**. At step **1312**, a determination is made as to whether multi-mode optical imager **10** will transmit data to base intelligence station **404** or to an aerial vehicle (e.g., fighter plane **406**). If data is chosen for transmission to base intelligence station **404**, then, at step **1314**, the data from step **1310** may be transmitted to base intelligence station **404**. At step **1316**, base intelligence station **404** may re-transmit the image of target object **402** detected from step **1304**, the still image captured of target object **402** from step **1308**, and/or the data from step **1310** to an aerial vehicle. Returning to step **312**, if data is chosen for transmission to aerial vehicle, then, at step **1318**, the data from step **1310** may be transmitted to aerial vehicle (fighter plane **406**) to investigate target object **402** and/or launch an attack on target object **402**.

[**0075**] **FIG. 18** shows another process **1400** for providing image stabilization to multi-mode optical imager **10**. Process **1400** for example includes certain software functions and/or routines controlling a multi-mode optical imager, such as image capture, shuttering, data synthesis and/or image processing to facilitate each described step. At step **1402**, a user will initiate a command by selecting one or more input buttons **506**. Controller **508** will then determine, at step **1404**, based on the selected input buttons **506**, whether to initiate stabilization of visible light wavelength band **18** image data detected by first optical detector **26** and infrared wavelength band **20** image data detected by second optical detector **32**. If image stabilization is selected, at step **1406**, controller **508**, at step **1408**, then determines if image stabilization is by mechanical means or by electronic means. If image stabilization is by mechanical means, then rate sensors **500**, at step **1410**, measures the rate of change of movement or rotation of the multi-mode optical imager **10** and transmits such measurements to actuators **502**; actuators **502** then controls small motors, in step **1412**, to move optics internal of multi-mode optical imager **10** and/or first and second optical detectors **26**, **32** to counteract the movement of multi-mode optical imager **10**. Returning to step **1406**, if image stabilization is by electronic means, then rate sensors **500** will measure the rate of change of movement or rotation of the multi-mode optical imager **10** and transmit such measurements to post-processor **504**, in step **1414**; post-processor **504**, at step **1416**, then receives visible light wavelength band **18** image data and infrared wavelength band **20** image data from detectors **26**, **32**, respectively, and determines modifications to the image data to counteract the movement of multi-mode optical imager **10**. Optionally, at step **1418**, controller **508** receives the rate of change of movement or rotation of the multi-mode optical imager **10** data from rate sensors **500** and directs the operation of orienting motors **512** to move multi-mode optical imager **10** such that fore-optics **14** are constantly aimed at moving target **510**. If image stabilization is not selected, in step **1404**, the process **1400** is exited.

[**0076**] Another process **1500** is shown in **FIG. 19** for imaging a target object **604** with an unmanned aerial vehicle (UAV) **600**, such as for military reconnaissance. Process **1500** for example includes certain software functions and/or routines controlling a multi-mode optical imager, such as image capture, shuttering, data synthesis and/or image processing to facilitate each described step. At step **1502**, target object **604** is sighted by multi-mode optical imager **10** and the electromagnetic radiation **12** emitted from, and/or reflected off of, target object **604**, is detected by, for example, one of processes **700** of **FIG. 11**, **800** of **FIG. 12**, **900** of **FIG. 13**, or **1100** of **FIG. 15**. At step **1504**, distance finder **200** and/or GPS **300** are used to determine distance from multi-mode optical imager **10** to target object **604**, position of multi-mode optical imager **10** relative to the earth, and/or position of target object **604** relative to imaging module **34** and/or the earth, in accord with process **1100**. At step **1506**, the data from step **1504** may be transmitted to base intelligence station **404**, **FIG. 8**, or other remote location. At step **1508**, targeting laser **202** may place a marker **606** on target object **604**.

[**0077**] Since certain changes may be made in the above methods and systems without departing from the scope hereof, it is intended that all matter contained in the above description or shown in the accompanying drawing be interpreted as illustrative and not in a limiting sense. It is also to be understood that the following claims are to cover certain generic and specific features described herein.

What is claimed is:

1. A microbolometer detector, comprising:

a microbolometer array for detecting a long-wave infrared band; and

micro-optics having an array of reflective concentrators, each of the reflective concentrators adjacent one bolometer of the microbolometer array for matching an f-number of infrared radiation to a desired f-number of the bolometer.

2. The microbolometer detector of claim 1, the concentrators having a compound-parabolic shape.

3. The microbolometer detector of claim 1, the concentrators comprising high-index germanium.

4. The microbolometer detector of claim 1, the micro-optics comprising one or more refractive elements transmissive to the long-wave infrared band, each of the elements being adjacent to one bolometer of the microbolometer array.

5. The microbolometer detector of claim 1, wherein the micro-optics comprise an array of hollow tapered capillaries.

6. The microbolometer detector of claim 5, further comprising a reflective coating on an inside surface of the hollow tapered capillaries.

7. The microbolometer detector of claim 1, wherein the micro-optics comprise one or more of a fiber optic taper, one or more refractive lens elements, and reflective elements.

8. The microbolometer detector of claim 1, further comprising a housing encasing the detector, except for a region of aperture.

9. The microbolometer detector of claim 1, the microbolometer array comprising an uncooled microbolometer array.

10. The microbolometer detector of claim 9, wherein the micro-optics are disposed proximal to the uncooled microbolometer array to reduce the f-number of the long-wave infrared band incident to the uncooled microbolometer array.

11. The microbolometer detector of claim 1, further comprising a controller responsive to a command signal to displace the micro-optics laterally across the microbolometer array, to shutter the array.

12. The microbolometer detector of claim 11, further comprising a piezo-electric element responsive to the command signal to shift the micro-optics laterally across the microbolometer array, to shutter the array.

* * * * *