April 17, 1934. B. DYSART 1,955,415

TYPEWRITING MECHANISM

Original Filed March 12, 1928 5 Sheets-Sheet 1

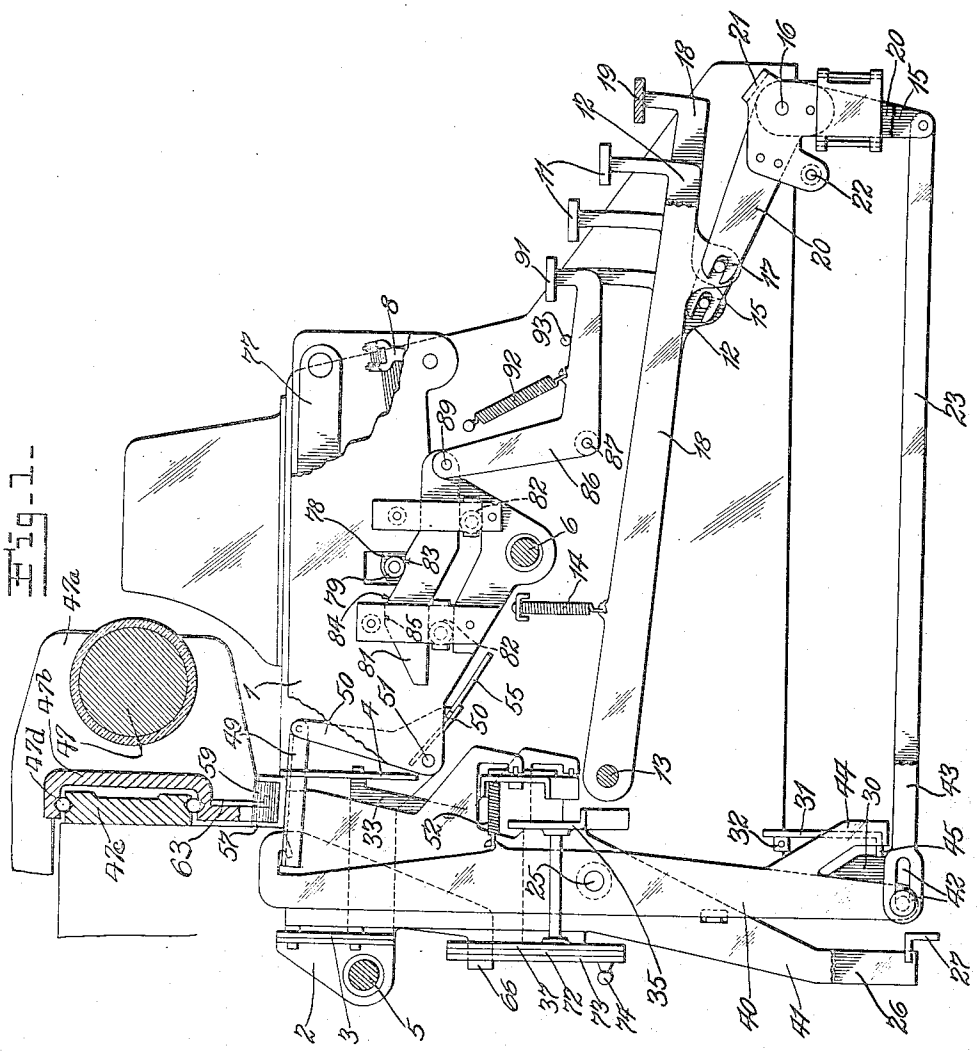

Fig. 1.

Inventor.
Birney Dysart,
by Kipsey & Kingsland.
His Attorneys.

April 17, 1934. B. DYSART 1,955,415

TYPEWRITING MECHANISM

Original Filed March 12, 1928 5 Sheets-Sheet 2

Fig. 1.

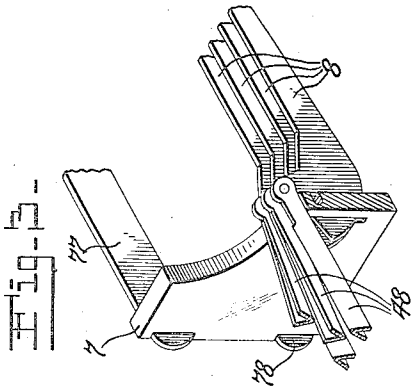

Fig. 2.

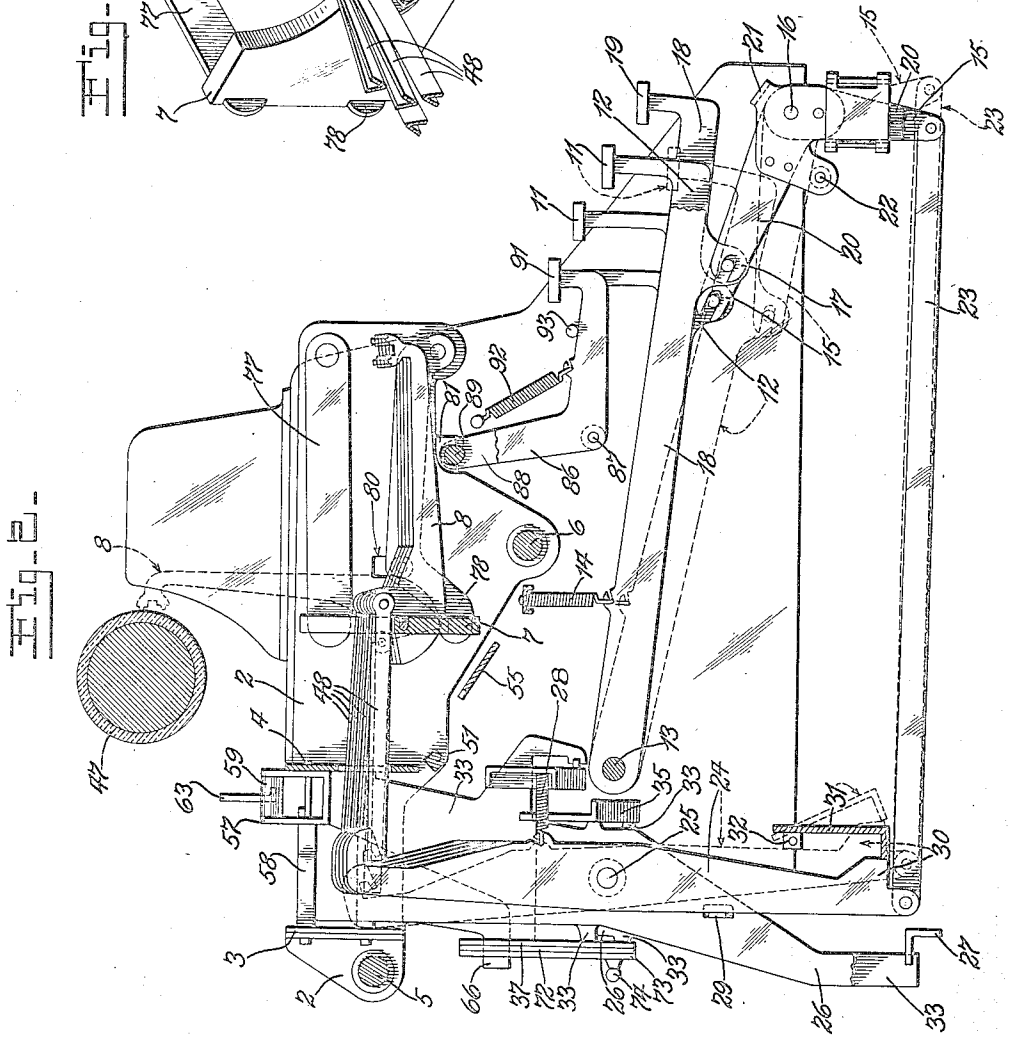

Inventor.
Birney Dysart,
by Rippey & Kingsland.
His Attorneys.

April 17, 1934. B. DYSART 1,955,415

TYPEWRITING MECHANISM

Original Filed March 12, 1928 5 Sheets-Sheet 3

Fig. 4.

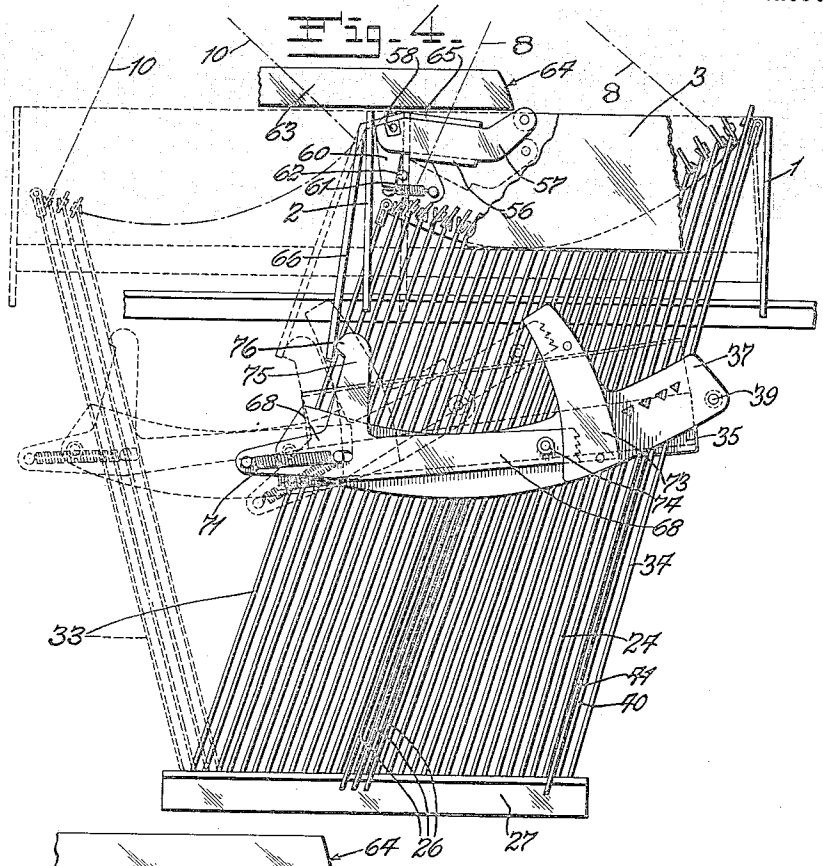

Fig. 5.

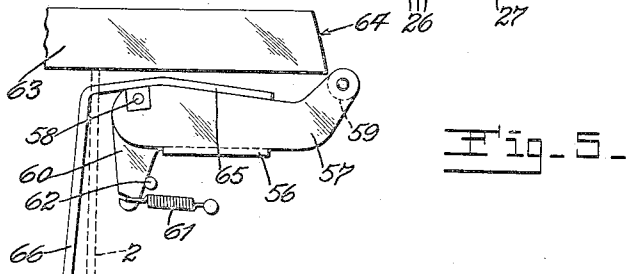

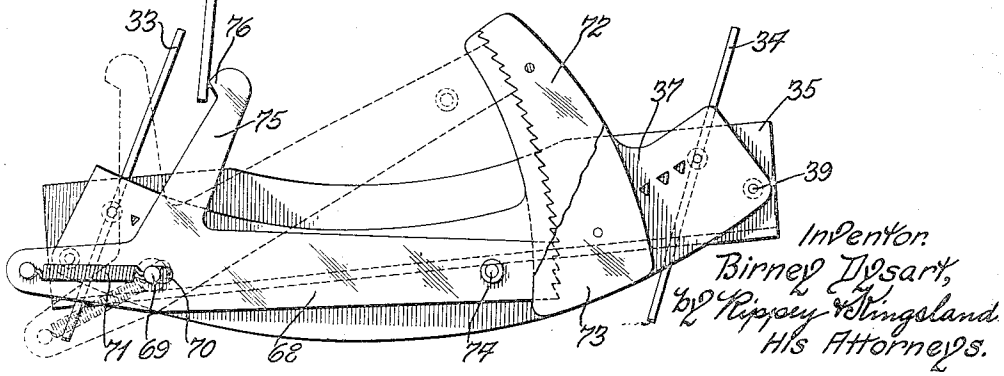

Inventor:
Birney Dysart,
by Pippey & Fitzgerald
His Attorneys.

April 17, 1934. B. DYSART 1,955,415

TYPEWRITING MECHANISM

Original Filed March 12, 1928 5 Sheets-Sheet 4

Fig. 6.

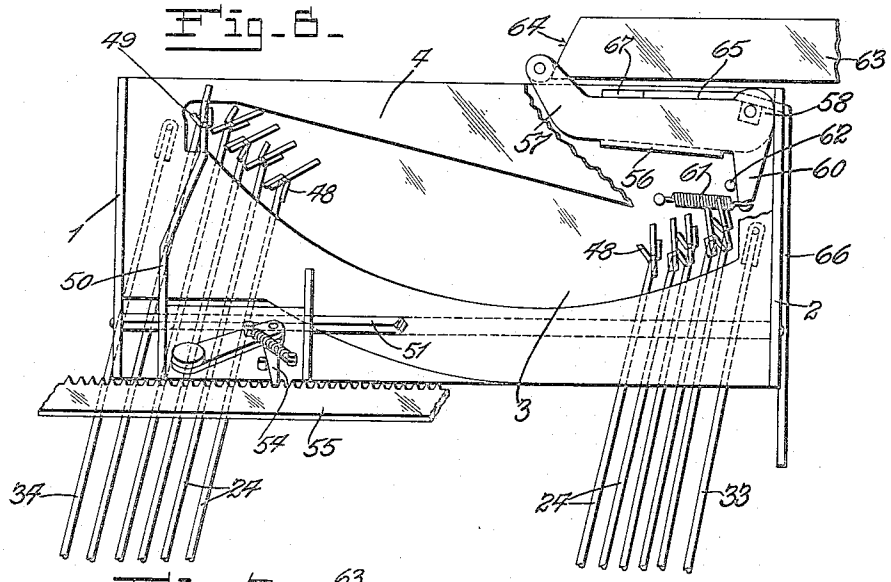

Fig. 7.

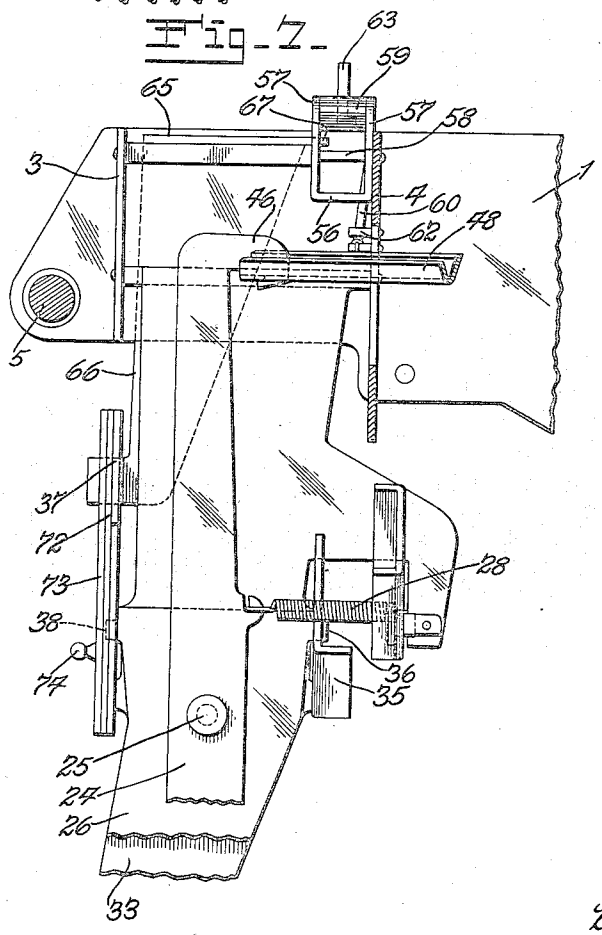

Fig. 8.

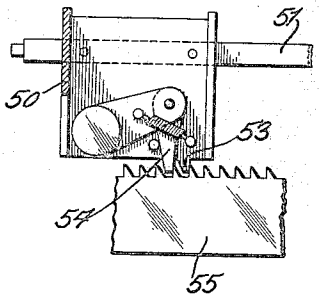

Inventor.
Birney Dysart,
by Rippey & Kingsland.
His Attorneys.

April 17, 1934. B. DYSART 1,955,415

TYPEWRITING MECHANISM

Original Filed March 12, 1928 5 Sheets-Sheet 5

Fig. 9.

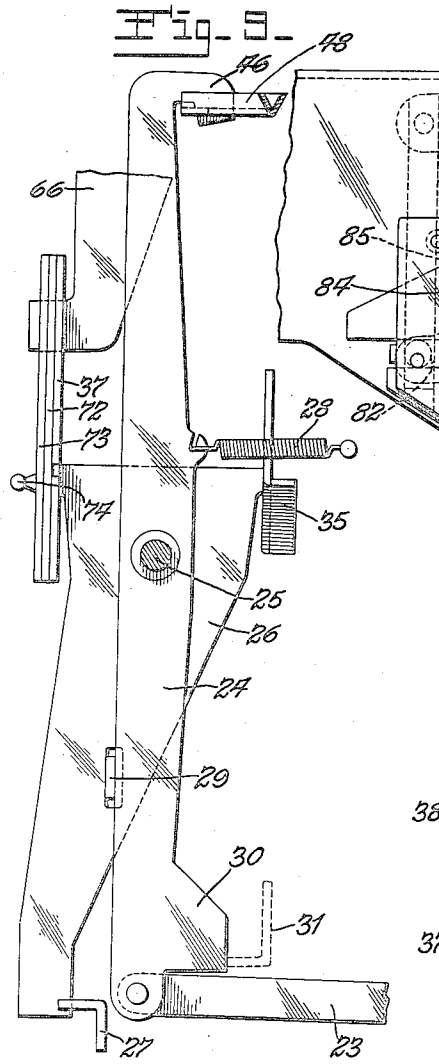

Fig. 10.

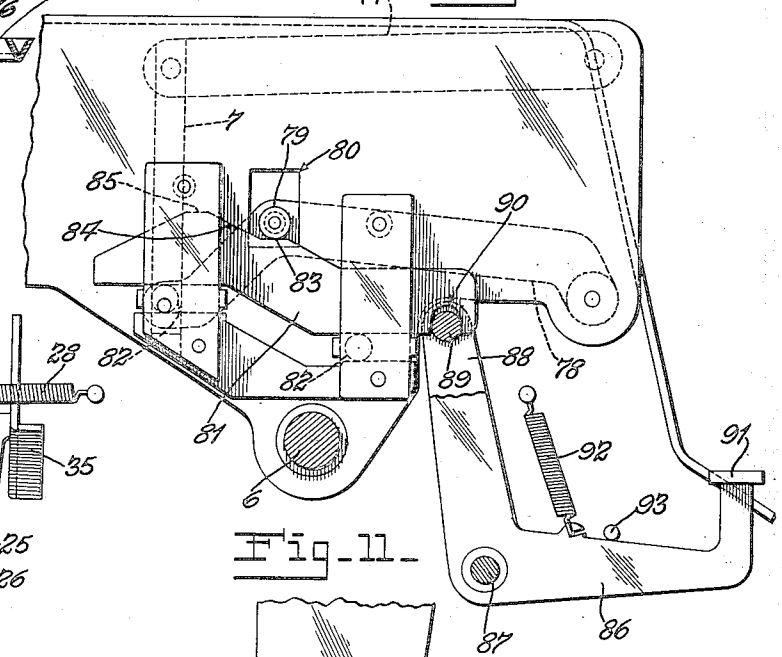

Fig. 11.

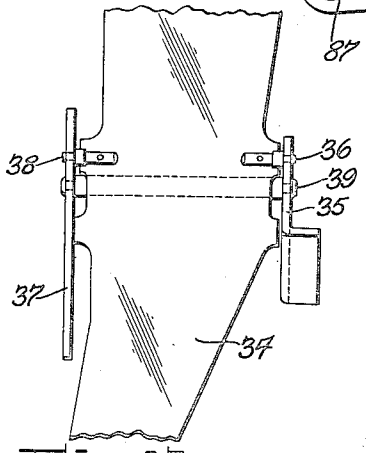

Fig. 13.

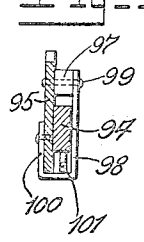

Fig. 12.

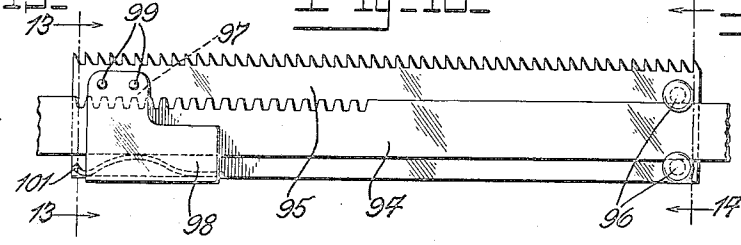

Fig. 14.

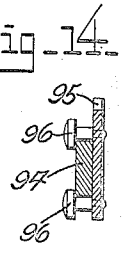

Inventor:
Birney Dysart,
by Rippey & Ringsland.
His Attorneys.

Patented Apr. 17, 1934 1,955,415

UNITED STATES PATENT OFFICE

1,955,415

TYPEWRITING MECHANISM

Birney Dysart, Cincinnati, Ohio; Eva Perin Dysart, executrix of said Birney Dysart, deceased, assignor to Eva Perin Dysart, West Hartford, Conn.

Application March 12, 1928, Serial No. 260,983
Renewed October 3, 1932

53 Claims. (Cl. 197—22)

This invention relates to typewriting mechanism, designed and adapted for embodiment and use in connection with a bookkeeping machine of standard construction in order to produce records on the work sheet in the paper carriage of the bookkeeping machine.

Part of the mechanism of this typewriting machine is mounted in a movable carriage whereby the typewriting mechanism moves laterally with respect to the work sheet on which the records are to be produced. Thus, the letter and word spacing movements are obtained by moving the typewriting mechanism instead of the paper carriage; although the paper carriage may be capable of lateral shifting movements.

My invention also embodies means whereby the paper carriage of the bookkeeping machine will shift the carriage in which the typewriting mechanism is mounted to its starting point as an incident to the regular right to left movement of the paper carriage during entry of the bookkeeping records, and for causing said carriage of the typewriting mechanism to be released automatically from the paper carriage when the former is in proper position for starting work. The machine also comprises manually adjustable means for varying the point of release of the carriage of the typewriting mechanism so that the starting point of the typewritten records may be shifted to the right or to the left with facility and rapidity.

An object of the invention is to produce a machine embodying the construction and mode of operation mentioned and hereinafter more particularly disclosed, reference being made to the drawings in which

Fig. 1 is a left hand side elevation of my improved typewriting mechanism, some of the parts being shown in section, and some omitted for clearness.

Fig. 2 is a vertical longitudinal sectional view of the machine showing clearly the operative connections from the key levers to the type levers.

Fig. 3 is a perspective view showing the mounting for the type levers and the connection of said levers with their operating links.

Fig. 4 is a rear end elevation with parts of the movable type lever carriage broken away and most of the supports 26 omitted to avoid confusion.

Fig. 5 is an enlarged rear elevation of the movable frame in which the actuating levers of the typewriting devices are mounted, this view also showing the manually adjustable device for controlling the release of the carriage of the typewriting devices from control of the paper carriage of the bookkeeping machine.

Fig. 6 is a front elevation of part of the type lever carriage, some of the actuating levers for the typewriting devices being shown.

Fig. 7 is a left side elevation of the mechanism shown in Fig. 6, parts being in section.

Fig. 8 shows a part of the escapement device for controlling spacing movements of the typewriting mechanism.

Fig. 9 is a left hand elevation showing one of the type lever actuating levers and the supporting bracket plate on which it is mounted.

Fig. 10 is a view showing the connections for shifting the recording devices from lower case to upper case positions.

Fig. 11 is an elevation of a part of one of the swinging members on which the moving frame of Fig. 5 is mounted.

Fig. 12 shows a modification of the escapement rack plate 55 illustrated in Figs. 1 and 6.

Fig. 13 is a cross sectional view on the line 13—13 of Fig. 12.

Fig. 14 is a cross sectional view on the line 14—14 of Fig. 12.

A carriage comprising side plates 1 and 2 and cross plates 3 and 4 (Figs. 1, 2 and 4) is mounted for lateral sliding movements on rails 5 and 6. It is within the expected knowledge and skill of mechanics to provide suitable antifriction devices for supporting this carriage on said rails 5 and 6 and, to make the important features of the invention clearer, illustration of such known elements is omitted. A type lever segment 7 is mounted in the carriage described for vertical sliding movements to different case type positions, and a series of type levers 8 are pivoted to said segment 7. The number of type levers may be varied to meet the requirements of the work for which the machines are intended. I find that by use of twenty-nine type levers I am able to obtain satisfactory results by providing two types on each type lever. The curvature of the segment 7 on which the type levers are pivoted is such that the type levers at the left are in a plane considerably above the remainder of the type levers so that the printing point at the start will be at the intersection of the lines 9, and at the end of the line of writing the printing point will be at the intersection of the lines 10 (Fig. 4). The line of writing will extend horizontally in a line from the intersection of the lines 9 to the intersection of the lines 10. In the lower position of the type levers, for bookkeeping purposes, the printing is preferably capi-

tal letters, thus using twenty-six of the type levers and the remaining three type levers in the suggested embodiment may include a comma, a period and the character "&"; in the upper position of the type levers the digits may be printed as well as punctuation marks and other desired symbols and characters. In this machine small or lower case type are not needed.

The machine comprises a bank of keys 11 arranged in three transverse rows in a keyboard on the forward end of levers 12 having their rear ends mounted on a stationary pivot 13 below the type lever carriage. These levers are supported in their uppermost positions by springs 14. A series of bell crank levers 15 are pivoted on a support 16 and their rearwardly extended arms have pin-in-slot connection 17 with the respective levers 12. A pair of levers 18 have their front ends connected by a space bar 19, and each of said levers 18 is connected with a bell crank lever 20 in the same way that the levers 12 are connected with the bell crank levers 15. The bell crank levers 20 are connected by a web 21 and by a tie rod 22 so that said levers 20 are operated in unison. The lower end of each bell crank lever 15 has pivotal connection with a rearwardly extending link 23, the rear ends of which links are pivoted to the lower end of a series of levers 24 (Figs. 1, 2 and 9) capable of movement forwardly and rearwardly, and the upper portions thereof laterally.

Each of the levers 24 is mounted on a pivot 25 on a support 26. The supports 26 have their lower ends engaging in notches in a comb plate 27 (Figs. 1, 2 and 9) so that their upper ends may swing laterally with the carriage in which the printing mechanism is mounted. The upper ends of the levers 24 are yieldingly held and actuated to their forward or unoperated positions by a series of springs 28 (Fig. 7). Thus, the springs 14 and the springs 28 cooperate to return each train of printing mechanism to unoperated position after each operation. In their unoperated positions, the lower portions of the levers 24 have their rear edges engaging projections 29 on the respective supports 26. Each of the levers 24 has on its lower end a forwardly extending portion 30 engaging the rear edge of a universal bar 31 suspended from the frame of the machine by pivots 32 (Fig. 1). Thus, when any of the keys 11 is depressed, the universal bar 31 is actuated forwardly.

As before mentioned, the lower ends of the supports 26 engage in notches in the comb plate 27 so that the lower ends of said supports 26 are incapable of lateral movements, but the upper ends are capable of swinging laterally from and to a starting position. Thus, the comb plate 27 constitutes a species of pivot for the supports 26 to permit the upper ends of said supports to swing laterally, as stated.

A plate 33 has its upper end pivoted to the cross plates 3 and 4 of the carriage in which the typewriting mechanism is mounted (Figs. 2 and 4) and its lower end engaging the comb plate 27 so that the upper portion thereof can swing laterally from and to a starting position. A similar plate 34 is pivoted in like manner to said carriage for the typewriting mechanism at the opposite side of the series of levers 24 and also has its lower end engaging the comb plate 27. Thus, the levers 24 and plates 33 and 34 may swing laterally without passing their upper ends through an arc as would occur if the lower portions thereof were mounted on fixed pivots. For, as the upper ends of said levers and plates move laterally, the lower ends move downwardly through the notches in the comb plate 27, permitting the upper ends to remain in the same horizontal plane in any position of the carriage. A front plate 35 is mounted on pivots 36 extending from the front edges of the plates 33 and 34, respectively, and a rear plate 37 is mounted on pivots 38 extending from the rear edges of the plates 33 and 34, respectively, and are connected and held in proper relationship by tie rods 39 (Figs. 5 and 11). The supports 26 have their upper ends pivoted to the plates 35 and 37 so that the upper ends of the supports 26 must move laterally as the carriage supporting the typewriting mechanism moves laterally, because the plates 33 and 34 are moved by the carriage and said plates support and move the plates 35 and 37 and thereby the upper ends of the supports 26.

Since the levers 24 are pivotally supported by the supports 26 they too are swung laterally with the carriage, as described. Since the printing levers and the upper ends of the levers 24 are carried laterally with the movable carriage and, since the upper ends of the levers 24 remain respectively in the same horizontal planes at all times, I am able to maintain the upper ends of said levers 24 at the same height as the pivotal bearings of their respective type levers 8.

An escapement lever 40 is pivoted on a support 41 in the same way that the levers 24 are pivoted on the supports 26. The lower end of said lever 40 has pin-in-slot connection 42 with a link 43 having its front end pivoted to the lower arm of an escapement bell crank lever 20 (Fig. 1). The lever 40 has an arm 44 extending downwardly in front of a projection 45 from the universal escapement bar 31. Thus, when any one of the levers 24 is operated, the lever 40 will be operated thereby. But said lever 40 may be operated by the space bar 19 without operation of the universal bar 31.

Each of the levers 24 has a forwardly and downwardly extending hook 46 (Fig. 7) in connection with its upper end. These hooks 46 are slightly bent from the planes of their respective levers 24 so that they point directly toward the printing point on the platen 47 when the levers 24 are in vertical positions. The platen 47 will be recognized as the familiar roller type of platen for feeding the paper in line spacing. Links 48 have their rear ends pivotally connected with the hooks 46 and their front ends connected with the respective type levers 8 so that said type levers will be operated to print when the corresponding key train is operated. The roller platen 47 is mounted in a laterally shiftable carriage 47^a. A conventional mounting for this laterally shiftable carriage 47^a comprises a transverse carriage member 47^b embracing the rigid rail 47^c supporting the anti-friction bearings 47^d for the carriage. The rail 47^c is rigidly supported by stationary parts of the machine, permitting lateral shifting of the carriage 47^a in a well understood manner.

Escapement mechanism

As before explained, the escapement lever 40 is operated by the universal bar 31 when any of the keys 11 is operated to obtain letter spacing as an incident to the printing of the characters on the type levers 8. It has also been mentioned that the escapement key lever 40 is operated by the spacing bar or key 19. This lever 40 con-

trols the step by step movement of the carriage supporting the printing mechanism.

The carriage supporting the printing mechanism and which carriage is supported for lateral movements on the rails 5—6 may be actuated laterally toward the right by any suitable motor or spring (not shown), such, for instance, as the motor or spring commonly used to move typewriter carriages as an incident to operation of the keys. The capability of the carriage for this lateral movement being made apparent, it is, of course, within the ability of those skilled in this art to equip the machine with such a motor or spring as will impart proper lateral movements to said carriage. I have, therefore, chosen to omit illustration of such carriage actuating means.

The upper end of the lever 40 is connected by a link 49 (Fig. 1) with the upper arm of a lever 50 attached to a transverse shaft 51 supported for rocking movements in the side plates 1 and 2 of the carriage. The upper end of the lever 40 is actuated forwardly by a spring 52 in the same manner that the upper ends of the levers 24 are actuated forwardly by the springs 28.

An escapement (conventionally shown in Fig. 6) comprising a tooth 53 rigid with the shaft 51 and a pawl 54, is supported by the shaft 51 for rocking movements therewith, and said tooth and pawl cooperate with a ratchet rack 55 to control the step by step movements of the carriage. In unoperated position the pivoted pawl 54 engages the rack 55, as is usual in escapements of this type, so that the carriage may be returned to its starting position while the pawl escapes over the teeth of the rack.

After the completion of each line of writing the type lever carriage that is supported on the rails 5 and 6 may be returned to its starting position at the left, and the paper or record sheet may be fed in line spacing about the platen 47 by the usual equipment of the standard bookkeeping machine with which my invention is combined. Usually, only a single line of writing is required for each item. The work sheet is removed from the machine after completion of the line of writing and another work sheet inserted about the platen 47 for the reception of the entries by the standard bookkeeping machine. As an incident to shifting of the standard platen 47 to the left, as usual in such machines, while such bookkeeping machine entries are being made, the type lever carriage that is supported on the rails 5 and 6 is automatically shifted to the left to its normal position for commencing a new line of records. This movement of the type lever carriage by the platen carriage of the bookkeeping machine is effected automatically by obtaining engagement of a part of the platen carriage with a part of the type lever carriage. At the proper time, that is to say, when the type lever carriage is at or about its proper starting position, the engaging parts on the platen carriage and the type lever carriage are disengaged from each other, permitting the platen carriage to move farther toward the left, if such farther movement is needed; and, after completion of the numerical portion of the record entry, the necessary words or descriptive matter are added by the typewriting department.

Type lever carriage return mechanism

A plate 56 is bent and shaped to form a pair of arms 57 which are pivoted on the front end of a rod 58 carried by the plates 3 and 4 of the type lever carriage. The pivot point of these arms is near the right hand side of the type lever carriage and their free ends are turned upwardly and support between them a roller 59. One of the arms 57 has a downward extension 60 and a spring 61 connects said extension with the adjacent plate 4 and yieldingly holds the free ends of the arms 57 in their raised positions in which the extension 60 is against an abutment 62. In the raised position of the arms 57 the roller 59 is in the direct path of a bar 63 forming a part of the laterally shiftable paper carriage of the standard bookkeeping machine. The rotary platen 47 is, of course, mounted in and shifted laterally with said laterally shiftable paper carriage. I modify the left hand end of the bar 63 from standard construction by shaping it in the form of an arc 64 which is concentric with the pivot 58 of the arms 57. At the beginning of an entry by the standard bookkeeping machine, the paper carriage is always moved to the right so that the end of the bar 63 is to the right of the roller 59. As the entry of records by the bookkeeping machine proceeds the paper carriage is moved leftwardly to different columnar positions, as is familiar, and when the end of the bar 63 engages the roller 59, the type lever carriage is moved along with the paper carriage whenever the paper carriage moves to another columnar position after such engagement of the bar 63 with the roller 59. This sets the type lever carriage in position for operation of the typewriting mechanism. This positioning of the type lever carriage for operation of the typewriting mechanism makes the typewriting mechanism ready for operation immediately after a movement of the paper carriage following the last columnar record by the bookkeeping machine. It is possible for the type lever carriage thus to move because the pivoted escapement pawl 54 being in engagement with the rack 55 will permit such movement of the type lever carriage.

At or about the time that the type lever carriage reaches position for operation of the typewriting mechanism, the roller 59 is disengaged from the curved end 64 of the bar 63. This disengagement is effected automatically and as an incident to the operation of the machine. A bell crank lever, comprising a lateral arm 65 and a depending arm 66 (Figs. 2, 4 and 5), is secured to the rod 58. The arm 65 of said lever has a projection 67 over one of the arms 57 (Figs. 6 and 7) so that, when said bell crank lever 65—66 is operated to lower the arm 65 hereof, the arms 57 will also be lowered. Provision is made to operate said bell crank lever 65—66 for the purpose of lowering the arms 57 to disengage the roller 59 from the end of the bar 63.

The plate 37 supports a lever 68 by a pin 69 extending from said plate 37 through a slot 70 in the lever 68. Thus, the lever 68 is supported for pivotal and sliding movements and is actuated toward the left hand side of the machine by a spring 71 connecting said lever 68 with the pin 69 (Figs. 4 and 5). The free end of the lever 68 is formed with teeth held in engagement with teeth on a rack 72 attached to the rear side of the plate 37. The rack 72 is arcuated concentrically with the pivot 69. The spring 71 yieldingly holds the end of the lever 68 in engagement with the rack 72. A retaining or guide plate 73 is attached to the rack 72 and overlies the adjacent end of the lever 68 to prevent said

lever 68 from moving to the rear and becoming disengaged from the rack 72. A projection 74 from the lever 68 constitutes a handle whereby said lever 68 may be moved toward the right (toward the left as seen from the rear as in Figs. 2 and 3) to disengage the end of said lever 68 from the rack 72. Thus, the lever 68 may be raised or lowered to different adjustments throughout the length of the rack 72, as required for the work to be performed. Raising of the free end of the lever 68 will cause release of the roller 59 sooner than if the free end of the lever 68 be lowered. That is, lowering of the free end of the lever 68 delays the disengagement of the roller 59 from the bar 63. The lever 68 is formed with an upwardly extended arm 75 provided with a pointed extremity 76 located so that, as the type lever carriage is moved toward the left, the lower arm 66 of the bell crank release lever 65—66 is moved against it. After such contact of the arm 66 with the part 76 further movement of the type lever carriage toward the left will result in operating the bell crank lever 65—66 to depress the arms 5 and thereby move the roller 59 below and out of engagement with the end of the bar 63. The escapement device then holds the type lever carriage stationary until time for operation of the typewriting mechanism.

Mechanism for raising and lowering the type for upper and lower case printing

As previously mentioned, the segment 7 is capable of vertical movements to two different positions. In the construction shown the segment 7 is mounted on the rear end of a pair of upper levers 77 and a pair of lower levers 78, one lever of each pair being pivotally mounted at its forward end to the inner sides of the side plates 1 and 2 of the type lever carriage. The rear end of each of the levers 78 is inclined downwardly and rearwardly. The levers 78 have rollers 79 extending through openings 80 in the side plates 1 and 2. At the outer side of each of the plates 1 and 2 a sliding cam plate 81 is mounted on antifriction bearings 82 for movement in parallel horizontal planes. The rollers 79 are supported upon the upper edges of the cam plates 81. In the lower position of the segment 7 the rollers are on shoulders 83 on said cam plates from which the inclined edges 84 of said cam plates lead to shoulders 85. Obviously, (Fig. 10) forward movement of the cam plates 81 will raise the type lever segment 7 so that, when the typewriting keys 11 are operated, the type levers 8 will be operated to strike the type located nearest their pivotal points against the printing line of the platen.

A bell crank key lever 86 is rigidly attached to a rock shaft 87 supported by stationary parts of the machine. An arm 88 attached to the opposite end of the shaft 87 from the lever 86 cooperates with the upper arm of the bell crank lever 86 to support a bail 89 engaging in notches 90 in the lower edges of the forward ends of the sliding cam plates 81. A key 91 on the forward end of the key lever 86 is in the same keyboard with the other keys of the machine and provides convenient means for manually operating lever 86 to raise the type lever segment to its upper position by operating the cam plates 81. A spring 92 returns the lever 86 and thereby the cam plates 81 to their unoperated positions after each operation in which unoperated positions the segment 7 is in its lower position. An abutment 93 stops the lever 86 in its unoperated position.

An alternative escapement mechanism

An alternative form of some of the parts of an escapement mechanism is shown in Figs. 10, 11 and 12. This alternative form of escapement mechanism may be used to insure proper setting of the type lever carriage in its proper starting position, and to prevent setting of the type lever carriage in a wrong position for starting. Because of the elasticity, flexibility or resiliency of parts of the machine and the varying rates of speed at which the paper carriage might be moved toward the left, it is possible that the position to which the type lever carriage is moved, as previously described, might vary to the extent of one or more letter spaces or steps of the escapement mechanism. This would necessarily result in uneven starting points of the records made on the work sheets by the typewriting mechanism. To obviate this possibility, I may use the alternative escapement elements shown in Figs. 12, 13 and 14. As there shown, I omit the previously described rigid escapement rack 55 and instead provide a rigid rack 94. On this rack bar 94 I mount an adjustable escapement rack 95 with which the escapement tooth 53 and pivoted pawl 54 (Fig. 6) cooperate exactly as they cooperate with the rack 55, with a single exception. That single exception consists in the arrangement of the adjustable escapement rack 95 on the rack 94 so that the tooth at the extreme left hand end of said rack 95 is in position to be engaged by the pivoted tooth 54 of the escapement mechanism when the type lever carriage is exactly in its proper starting position. Thus, when the paper carriage with its bar 63 is operated in a way to "overthrow" the type lever carriage—that is, when the paper carriage moves the type lever carriage toward the left beyond its proper starting position—the pivoted escapement tooth 54 will engage the tooth on the rack 95 at the end of said rack and stop the type lever carriage in exactly the proper position. The operation of the typewriter keys 11 and the spacing key 19 causes the escapement to function exactly as previously described. This rack bar 95 is adjustable along the bar 94. As shown, the rack bar 95 has headed studs 96 near one end engaging the upper and lower edges of the bar 94 and at the opposite end has a rack 97, the teeth of which engage the teeth of the rack 94 to hold the escapement rack 95 from longitudinal movements along said rack 94. A bracket 98 has its upper end held by the fasteners 99 whereby the rack 97 is attached to the rack 95. This bracket 98 extends downwardly at the opposite side of the rack 94 from the rack 95 (Fig. 13) and has a rebent end 100 lapping and secured to the rack 95. A spring 101 supported by the bracket 98 below the rack 94 functions to hold the teeth of the rack 97 in engagement with said rack 94, but is capable of compression to permit the end of the rack 94 to be raised and thereby disengage said rack 97 from said rack 94 to permit longitudinal adjustment of the rack 95 along the rack 94. Thus, this alternative form of escapement device is capable of selective adjustments in order to vary the position at which the type lever carriage will be automatically stopped for starting work.

It is apparent that record may be produced by the type on the type levers by use of any form of inking means, such as an inking ribbon, the mounting of which on the type lever carriage and the actuation of which by suitable means is well within the knowledge of those skilled in this art.

Or, the usual ribbon of the bookkeeping machine may be used by simply extending the same along the platen further to the left for that purpose. This, too, is well within the knowledge of the skilled mechanic. Illustration of such device has been omitted as it is deemed unnecessary for an understanding of the invention as herein explained.

From the foregoing it will be apparent that my improved typewriting mechanism is capable of embodiment in connection with a standard bookkeeping machine without substantial variation in the construction of said standard machine. The typewriting mechanism may be caused to function to obtain all of the desired results herein specifically mentioned or made apparent by the preceding description and the drawings. Other variations in the construction and arrangement of the parts may be used without departure from the nature and principle of the invention, and such variations are, of course, contemplated and will be employed when needed.

I claim:

1. The combination with a laterally shiftable paper carriage, of laterally movable typewriting mechanism for producing records on the paper in said paper carriage while said carriage remains stationary, and means on said paper carriage for moving said typewriting mechanism to a starting position.

2. The combination with a laterally shiftable paper carriage, of laterally movable typewriting mechanism for producing records on the paper in said paper carriage while said carriage remains stationary, means on said paper carriage for moving said typewriting mechanism to a starting position, and escapement mechanism controlling lateral step by step movements of said typewriting mechanism.

3. A typewriting machine comprising a laterally movable carriage, escapement mechanism controlling letter and word spacing movements of said carriage in one direction, a series of pivoted supports arranged to swing in conformity with the lateral movements of said carriage, levers pivoted on said supports for swinging movements therewith and independently thereof, keys for operating said levers independently of said supports, type levers pivoted in said carriage, and connections from said first named levers for operating said type levers.

4. A typewriting machine comprising a laterally movable carriage, escapement mechanism controlling letter and word spacing movements of said carriage in one direction, a series of pivoted supports arranged to swing in conformity with the lateral movements of said carriage, levers pivoted on said supports for swinging movements therewith and independently thereof, keys for operating said levers independently of said supports, type levers pivoted in said carriage, connections from said first named levers for operating said type levers, and means for shifting said type levers from one position to another in said carriage for using upper and lower case type.

5. A typewriting machine comprising a laterally movable carriage, a series of supports having their upper ends pivoted to said carriage for lateral movements therewith, pivot means holding the lower ends of said supports from lateral movement, type levers mounted in said carriage, a series of levers pivoted on said supports, means for operating said second levers, and connections from said second levers for operating said type levers.

6. A typewriting machine comprising a laterally movable carriage, a series of supports having their upper ends pivoted to said carriage for lateral movements therewith, pivot means holding the lower ends of said supports from lateral movement, type levers mounted in said carriage, a series of levers pivoted on said supports, means for operating said second levers, connections from said second levers for operating said type levers, escapement mechanism controlling lateral movement of said carriage in one direction, and means for returning said carriage to a starting position.

7. A typewriting machine comprising a laterally movable carriage, type levers pivoted in said carriage, operating levers for said type levers pivotally supported in said carriage, connections from said operating levers to said type levers, means supporting said operating levers for lateral swinging movements with said connections for letter spacing, and actuating connections to the said operating levers for operating the same.

8. A typewriting machine comprising a laterally movable carriage, type levers pivoted in said carriage, operating levers for said type levers pivotally supported in said carriage, connections from said operating levers to said type levers, means supporting said operating levers for lateral swinging movements with said connections for letter spacing, actuating connections to the said operating levers for operating the same, and escapement mechanism under control of said actuating connections controlling lateral step by step movements of said carriage.

9. A typewriting machine comprising a carriage movable laterally from a starting position, typewriting mechanism mounted in said carriage, a laterally shiftable platen for supporting paper for operation of the typewriting mechanism, an element movable laterally with the platen for moving said carriage, in the same direction as the platen moves, to the starting position, and escapement mechanism controlling movement of said carriage from the position to which it is moved by said element.

10. A typewriting machine comprising a laterally shiftable platen for holding the paper for records, a laterally movable carriage, typewriting mechanism supported in said carriage for recording on paper on said platen, means controlling lateral movements of said carriage, mechanism for operating said typewriting mechanism in any position of said carriage, and a device in connection with said platen for moving said carriage, in the same direction as the platen moves, to a starting position after operation.

11. A typewriting machine comprising a platen arranged to hold papers for records, a carriage supported for lateral movements below said platen, type levers mounted in said carriage, upright supports mounted for lateral swinging movements, levers pivoted on the swinging portions of said supports for operating said type levers, a stationary support below said carriage, key levers pivoted on said support, and connections operated by said key levers for operating said second levers in any of the lateral positions of said carriage.

12. A typewriting machine comprising a platen arranged to hold paper for records, a carriage supported for lateral movements below said platen, type levers mounted in said carriage, supports mounted for lateral swinging movements, levers pivoted on the swinging portions of

said supports for operating said type levers, a stationary support below said carriage, key levers pivoted on said support, connections operated by said key levers for operating said second levers in any of the lateral positions of said carriage, and escapement mechanism controlled by said key levers for controlling lateral movements of said carriage.

13. A typewriting machine comprising a laterally movable carriage, escapement mechanism controlling lateral movements of said carriage in one direction, type levers pivoted in said carriage, actuating levers for said type levers, means in said carriage supporting said actuating levers for lateral swinging movements with said carriage and for operative movements independently of said carriage, and connections for operating said actuating levers in any of the positions of said carriage.

14. A typewriting machine comprising a laterally movable carriage, escapement mechanism controlling lateral movements of said carriage in one direction, type levers pivoted in said carriage, actuating levers for said type levers, means in said carriage supporting said actuating levers for lateral swinging movements with said carriage and for operative movements independently of said carriage, a stationary support, key levers pivotally mounted on said support, and connections operated by said key levers for operating said actuating levers in any position of said carriage.

15. A typewriting machine comprising a laterally movable carriage, escapement mechanism controlling lateral movements of said carriage in one direction, type levers pivoted in said carriage, actuating levers for said type levers, means in said carriage supporting said actuating levers for lateral swinging movements with said carriage and for operative movements independently of said carriage, connections for operating said actuating levers in any of the positions of said carriage, and means for shifting said type levers to upper and lower case printing positions in any position of said carriage.

16. A typewriting machine comprising a laterally movable carriage, escapement mechanism controlling lateral movements of said carriage in one direction, type levers pivoted in said carriage, actuating levers for said type levers, means in said carriage supporting said actuating levers for lateral swinging movements with said carriage and for operative movements independently of said carriage, a stationary support, key levers pivotally mounted on said support, connections operated by said key levers for operating said actuating levers in any position of said carriage, and means for shifting said type levers to upper and lower case printing positions in any position of said carriage.

17. The combination with a laterally shiftable platen, of laterally movable typewriting mechanism for producing records on the paper on said platen while said platen remains stationary, escapement mechanism controlling lateral movements of said typewriting mechanism, and means shiftable laterally with said platen for moving said typewriting mechanism to a starting position.

18. The combination with a laterally movable paper platen, of a laterally movable carriage, typewriting mechanism in said carriage for producing records on paper on said platen while said platen remains stationary, escapement mechanism controlling step by step movements of said carriage, an element movable laterally with said platen, and a device in said carriage engageable by said element for moving said carriage to a starting position.

19. The combination with a laterally movable paper platen, of a laterally movable carriage, typewriting mechanism in said carriage for producing records on paper on said platen while said platen remains stationary, escapement mechanism controlling step by step movements of said carriage, an element movable laterally with said platen, a device in said carriage engageable by said element for moving said carriage to a starting position, and means for disengaging said device from said element about the time that said carriage reaches its starting position.

20. A typewriting machine comprising a laterally movable carriage, a vertical movable support in said carriage, type levers pivoted on said support and movable laterally by said carriage to different operative positions, mechanism for operating said type levers in the different positions of said carriage, a stationary support, levers pivoted on said support, and connections operative by said second levers for moving said type lever support vertically to different case type positions in any positions of said carriage.

21. A typewriting machine comprising a laterally movable carriage, type levers pivoted in said carriage, means for controlling lateral step by step movements of said carriage for letter and work spacing, sliding cams in said carriage for raising said type levers from one position to another, and means for operating said sliding cams to raise said type levers.

22. A typewriting machine comprising a laterally movable carriage, type levers pivoted in said carriage, means for controlling lateral step by step movements of said carriage for letter and word spacing, sliding cams in said carriage for raising said type levers from one position to another, a manually operative key device for operating said cams to raise said type levers, and automatic means for operating said key device to move said cams to position to permit said type levers to return to their initial positions.

23. A typewriting machine comprising a laterally movable carriage, escapement mechanism controlling lateral movements of said carriage in one direction, type levers pivoted in said carriage, supports pivoted to and extending downwardly from said carriage, means holding the lower portions of said supports from lateral movement when the upper portions of said supports move laterally with said carriage, levers pivoted on said supports, connections from said second levers for operating said type levers, and a series of key levers for operating said second levers.

24. A typewriting machine comprising a laterally movable carriage, escapement mechanism controlling lateral movements of said carriage in one direction, type levers pivoted in said carriage, supports pivoted to and extending downwardly from said carriage, means holding the lower portions of said supports from lateral movement when the upper portions of said supports move laterally with said carriage, levers pivoted on said supports, connections from said second levers for operating said type levers, a stationary support below said carriage, key levers pivoted on said stationary support, and connections from said key levers to the lower ends of said second levers for operating the same.

25. A typewriting machine comprising a laterally movable carriage, escapement mechanism controlling lateral movements of said carriage in

one direction, type levers pivoted in said carriage, supports pivoted to and extending downwardly from said carriage, means holding the lower portions of said supports from lateral movement when the upper portions of said supports move laterally with said carriage, levers pivoted on said supports, connections from said second levers for operating said type levers, a stationary support below said carriage, key levers pivoted on said stationary support, connections from said key levers to the lower ends of said second levers for operating the same, and springs cooperating with said second levers and with said key levers respectively, for returning said parts to their starting positions after operation.

26. A typewriting machine comprising a stationary support, a laterally shiftable element, a carriage movable laterally while said element remains stationary, escapement mechanism controlling lateral movements of said carriage in one direction, type lever devices in said carriage, means for operating said type lever devices in any position of said carriage, means for shifting said type lever devices to different type case positions, and a part supported by said carriage and engageable by said laterally shiftable element for moving said carriage to a starting position.

27. A typewriting machine comprising a stationary support, a laterally shiftable element, a laterally movable carriage, escapement mechanism controlling lateral movements of said carriage in one direction, type lever devices in said carriage, means for operating said type lever devices in any position of said carriage, a part supported by said carriage and engageable by said laterally shiftable element for moving said carriage to a starting position, and means for disengaging said part from said element about the time said carriage reaches said starting position.

28. A typewriting machine comprising a laterally shiftable element, a platen shiftable with said element, a laterally movable carriage, type levers supported by said carriage for printing on paper against said platen, escapement elements supported by said carriage, an adjustable rack engageable by said escapement elements to control step by step movements of said carriage in one direction, means for holding said rack in different adjusted positions for cooperation with said escapement elements, and a part in said carriage engageable by said shiftable element for moving said carriage to a starting position.

29. A typewriting machine comprising a laterally shiftable element, a platen shiftable with said element, a laterally movable carriage, type levers supported by said carriage for printing on paper against said platen, escapement elements supported by said carriage, an adjustable rack engageable by said escapement elements to control step by step movements of said carriage in one direction, means for holding said rack in different adjusted positions for cooperation with said escapement elements, a part in said carriage engageable by said shiftable element for moving said carriage to a starting position, and means for disengaging said part from said shiftable element about the time said carriage reaches its starting position.

30. A typewriting machine comprising a laterally shiftable element, a platen shiftable with said element, a laterally movable carriage, type levers supported by said carriage for printing on paper against said platen, escapement elements supported by said carriage, an adjustable rack engageable by said escapement elements to control step by step movements of said carriage in one direction, means for holding said rack in different adjusted positions for cooperation with said escapement elements, a part in said carriage engageable by said shiftable elements for moving said carriage to a starting position, a device supported by said carriage for disengaging said part from said shiftable element, and means for holding said device in different selected adjustments to regulate the position of said carriage at which said part will be disengaged from said shiftable element.

31. A typewriting machine comprising a laterally shiftable element, a platen for supporting paper and shiftable laterally with said element, a laterally movable carriage, typewriting mechanism mounted in said carriage, means for shifting said typewriting mechanism to different type case positions and means engageable by said element for moving said carriage in one direction.

32. A typewriting machine comprising a laterally shiftable element, a platen for supporting paper and shiftable laterally with said element, a laterally movable carriage, typewriting mechanism mounted in said carriage, means engageable by said element for moving said carriage in one direction, and devices for disengaging said means from said element.

33. A typewriting machine comprising a laterally shiftable element, a laterally movable carriage, typewriting mechanism supported in said carriage, key levers, an element supported in stationary position with respect to said carriage for supporting said levers, connections operated by said levers for operating said typewriting mechanism, an escapement device controlled by said levers controlling lateral step by step movements of said carriage, and a part in said carriage engageable by said first-named element for moving said carriage to a starting position.

34. A typewriting machine comprising a laterally shiftable element, a laterally movable carriage, typewriting mechanism supported in said carriage, key levers, an element supported in stationary position with respect to said carriage for supporting said levers, connections operated by said levers for operating said typewriting mechanism, an escapement device controlled by said levers controlling lateral step by step movements of said carriage, a part in said carriage engageable by said first-named element for moving said carriage to a starting position, and means for disengaging said part from said first-named element about the time that said carriage reaches its starting position.

35. A typewriting machine comprising a platen for holding paper to receive records, a laterally movable carriage, typewriting mechanism supported in said carriage for recording on paper on said platen, escapement mechanism controlling step by step lateral movements of said carriage as an incident to operation of said typewriting mechanism, a stationary support, key levers mounted on said stationary support, pivoted supports, connections from said key levers and supported in part by said pivoted supports for operating said typewriting mechanism, and elements for holding said connections in proper relationship to said key levers for operation thereby in any position of said carriage.

36. A typewriting machine comprising a laterally shiftable platen for holding paper to receive records, a laterally movable carriage, typewriting mechanism supported in said carriage for recording on paper on said platen, escapement mecha-

nism controlling step by step lateral movements of said carriage as an incident to operation of said typewriting mechanism, a stationary support, key levers mounted on said stationary support, connections from said key levers for operating said typewriting mechanism, elements for holding said connections in proper relationship to said key levers for operation thereby in any position of said carriage, and a device shiftable with said platen for moving said carriage to a starting position.

37. A typewriting machine comprising a laterally shiftable carriage, type levers pivoted in said carriage, levers pivotally supported in said carriage for lateral manipulation thereby, connections from the upper ends of said levers for operating said type levers, means preventing the lower ends of said levers from substantial lateral movement when said carriage moves laterally, and connections from the lower ends of said second levers for operating the same and thereby said type levers.

38. A typewriting machine comprising a laterally movable carriage, a stationary support, typewriting mechanism mounted in said carriage, sliding supports for said typewriting mechanism, means for raising said typewriting mechanism by sliding movements of said sliding supports, key levers pivoted on said stationary support, and connections from said key levers for operating said typewriting mechanism.

39. A typewriting machine comprising a laterally movable carriage, type levers in said carriage, sliding supports for said typewriting mechanism, means for raising said typewriting mechanism by sliding movements of said sliding supports, operating levers pivoted in said carriage for operating said type levers, a support that remains stationary when said carriage moves, a series of key levers pivoted on said support, connections operated by said key levers for operating said operating levers and thereby said type levers, springs for returning said levers to their starting positions, and escapement mechanism controlled by said operating levers for controlling lateral movements of said carriage.

40. A typewriting machine comprising a laterally movable carriage, typewriting mechanism mounted in said carriage, sliding supports for said typewriting mechanism, means for raising said typewriting mechanism by sliding movements of said sliding supports, mechanism controlling step by step lateral movements of said carriage when said typewriting mechanism is operated, devices for operating said typewriting mechanism, and devices for shifting said typewriting mechanism from one position to another in said carriage while said carriage remains stationary.

41. A typewriting machine comprising a laterally movable carriage, typewriting mechanism mounted in said carriage, sliding supports for said typewriting mechanism, means for raising said typewriting mechanism by sliding movements of said sliding supports, mechanism controlling step by step lateral movements of said carriage when said typewriting mechanism is operated, devices for operating said typewriting mechanism, a stationary support, and devices supported in part by said support and in part by said carriage for shifting said typewriting mechanism from one position to another in said carriage.

42. A typewriting machine comprising a laterally movable carriage, typewriting mechanism mounted in said carriage, mechanism controlling step by step lateral movements of said carriage when said typewriting mechanism is operated, devices for operating said typewriting mechanism, a stationary support, devices supported in part by said support and in part by said carriage for shifting said typewriting mechanism to upper from lower case type position in said carriage while said carriage remains stationary, and an actuator cooperating with said devices for returning said devices and thereby said typewriting mechanism to their starting position.

43. A typewriting machine comprising a laterally movable carriage, typewriting mechanism supported in said carriage, sliding supports on said carriage for said typewriting mechanism, a stationary support, and devices supported in part by said stationary support and in part by said carriage for moving said sliding supports to shift said typewriting mechanism from one position to another in said carriage while said carriage remains stationary.

44. A typewriting machine comprising pivoted type levers, an approximately vertical lever for operating each of said type levers, means permitting lateral swinging movements of the upper ends of said vertical levers and preventing substantial lateral movements of the lower ends of said vertical levers, connections from each of said vertical levers to a corresponding type lever, a link in connection with each of said vertical levers, a bell crank lever operatively connected with each of said links, and a key lever engaging each of said bell crank levers.

45. A typewriting machine comprising pivoted type levers, an approximately vertical lever for operating each of said type levers, means permitting lateral swinging movements of the upper ends of said vertical levers and preventing substantial lateral movements of the lower ends of said vertical levers, connections from each of said vertical levers to a corresponding type lever, a link in connection with each of said vertical levers, a bell crank lever operatively connected with each of said links, a key lever engaging each of said bell crank levers, and springs connected with said vertical levers and said key levers respectively, for returning the same to their starting positions.

46. A typewriting machine comprising a laterally movable carriage, type levers pivoted in said carriage escapement mechanism controlling lateral movements of said carriage, levers pivoted in said carriage for operating said type levers, connections from each of said second levers to a corresponding type lever, a lever pivoted in said carriage for operating said escapement mechanism, a stationary support, key levers pivoted on said support, connections from each of said key levers to a corresponding one of said second levers, means for operating said escapement lever by said second levers, and a device for operating said escapement lever while said key levers remain stationary.

47. A typewriting machine comprising a laterally movable carriage, type levers pivoted in said carriage, escapement mechanism controlling lateral movements of said carriage, levers pivotally connected with said carriage for operating said type levers, connections from each of said second levers to a corresponding type lever, a lever pivoted in said carriage for operating said escapement mechanism, a stationary support, key levers pivoted on said support, connections from each of said key levers to a corresponding one of said second levers, means for operating said escapement lever by said second levers, a device for

operating said escapement lever while said key levers remain stationary, and means for restoring all of said levers to their starting positions.

48. A typewriting machine comprising a laterally movable carriage, typewriting mechanism supported in said carriage, escapement mechanism controlling step by step movement of said carriage when said typewriting mechanism is operated, a lever mounted in said carriage for operating said escapement mechanism, connections for operating said typewriting mechanism, and devices controlled by said connections for operating said lever and thereby said escapement mechanism.

49. The combination with a laterally shiftable paper carriage and a platen roller in said carriage for feeding the paper in line spacing, of laterally movable typewriting mechanism for producing records on the paper against said roller in said paper carriage while said paper carriage remains stationary, and means on the paper carriage for moving said typewriting mechanism to a starting position.

50. A typewriting machine comprising a laterally movable paper carriage, a platen roller in said carriage for feeding the paper in line spacing, an additional carriage, an escapement device controlling lateral movements of said additional carriage in one direction independently of said paper carriage, typewriting mechanism mounted in said additional carriage, means for operating said typewriting mechanism to produce lines of records on the paper against said platen roller while said paper carriage and said platen roller remain stationary, and means for shifting said typewriting mechanism to different positions in said second carriage for using upper and lower case type of said typewriting mechanism while said paper carriage remains stationary.

51. Typewriting mechanism comprising a laterally shiftable paper carriage, mechanism in said carriage for supporting and feeding paper in line spacing, laterally movable typewriting devices, and mechanism for operating said typewriting devices laterally to produce records on paper supported by said paper supporting mechanism while said paper carriage remains stationary.

52. In a typewriting machine, the combination with a laterally shiftable paper carriage, typewriting mechanism for producing horizontal lines of records on paper in said paper carriage while said paper carriage remains stationary, and means controlled by said paper carriage for conditioning said typewriting mechanism for operation.

53. A typewriting machine comprising a stationary paper support, laterally shiftable typewriting devices, mechanism for operating said typewriting devices and shifting said typewriting devices laterally in letter and word spacing movements to produce horizontal lines of records on said paper support, a set of keys for operating said mechanism, and means other than said keys for returning said typewriting devices to their starting position.

BIRNEY DYSART.