F. T. ROBINSON.

DOOR SECURER.

APPLICATION FILED JULY 14, 1909.

953,861. Patented Apr. 5, 1910.

Fig. 1.

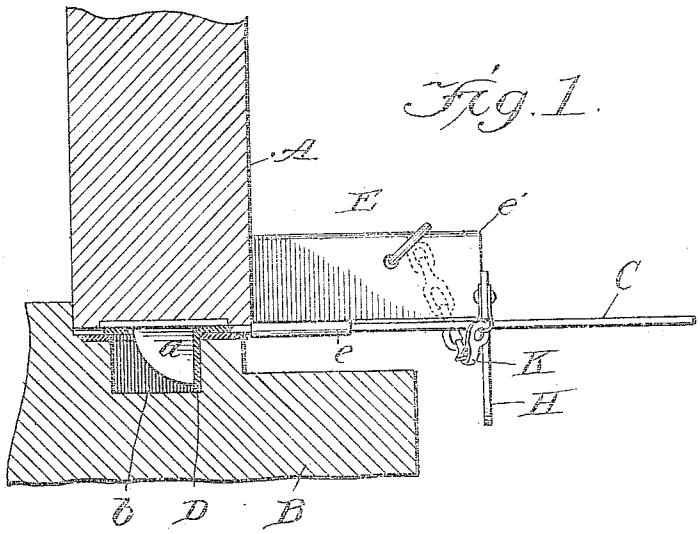

Fig. 2.

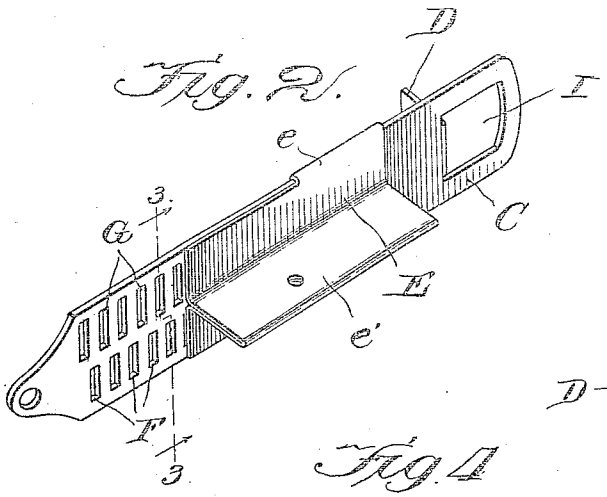

Fig. 3.

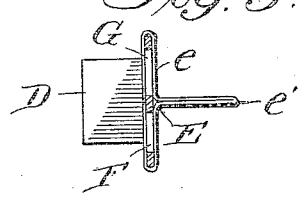

Fig. 4

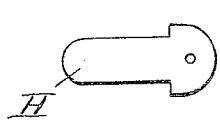

Witnesses:
Harry S. Gaither
Bruce A. Sweeh

Inventor:
Frank T. Robinson
by Chamberlin & Freudenreich
attys

ANDREW B. GRAHAM CO. PHOTO-LITHOGRAPHERS, WASHINGTON, D. C.

UNITED STATES PATENT OFFICE.

FRANK T. ROBINSON, OF CHICAGO, ILLINOIS.

DOOR-SECURER.

953,861. Specification of Letters Patent. Patented Apr. 5, 1910.

Application filed July 14, 1909. Serial No. 507,466.

To all whom it may concern:

Be it known that I, FRANK T. ROBINSON, a citizen of the United States, residing at Chicago, county of Cook, State of Illinois, have invented a certain new and useful Improvement in Door-Securers, and declare the following to be a full, clear, and exact description of the same, such as will enable others skilled in the art to which it pertains to make and use the same, reference being had to the accompanying drawings, which form a part of this specification.

My invention has for its object to provide a simple and powerful lock for doors or the like which will positively prevent them from being opened from without.

A further object of my invention is to provide a simple and compact auxiliary lock for doors or the like which may be carried about in the pocket or hand luggage and applied to doors wherever the owner of the lock may happen to be.

The various features of novelty whereby my invention is characterized will hereinafter be pointed out with particularity in the claim; but, for a full understanding of my invention and of its object and advantages, reference may be had to the following detailed description taken in connection with the accompanying drawing, wherein:

Figure 1 is a section taken through a door and adjacent jamb showing my improved lock in position; Fig. 2 is a perspective view of the lock, the holding key being omitted; Fig. 3 is a section taken on line 3—3 of Fig. 2; and Fig. 4 is a side view of the holding key.

Referring to the drawing, A represents a door and B the door jamb. *a* is the usual knob-operated dog which springs into the socket *b* in the jamb when the door is closed. All of these parts may take any usual or preferred forms and they have therefore not been illustrated in detail and will not be described further.

In accordance with my invention, I provide an elongated flat plate C near one end of which is a laterally-projecting lip D. Fitting upon this plate is a slide E which may be slipped on and off at will. The plate is provided with a series of small openings arranged closely together so that a pin or key of some sort may be inserted at various points in rear of the slide and so prevent the slide from being slipped off. In the preferred arrangement of these openings I provide two series, the one being designated at F and the other at G. The openings of one series are staggered with respect to those of the other so that a rather fine adjustment may be obtained.

In using the device; the plate is held against the door jamb, while the door is open, the lip D being inserted into the socket *b*. The door is then closed and holds the plate in this position until the door is again opened. The slide is then slipped in place and moved along the plate until it engages with the door, whereupon a pin or key of some sort, such as indicated at H is inserted within the opening nearest the rear end of the slide. If it be now attempted to open the door the slide will be forced into engagement with the pin or key and the door will be held against opening through a rigid abutment. It will therefore be seen that it is impossible to open the door from without unless sufficient force is applied to break some part of the device. When it is desired to open the door, the pin or key is simply removed, and the slide is retracted whereupon the door is free to be opened in the usual way.

The several parts may, of course, be made in various forms and shapes. Thus the plate C may be provided with an opening I in advance of the lip D to permit the passage of the dog or catch *a*. The slide may conveniently be in the form of a sleeve *e* having a latterly-projecting rib e^1, the sleeve portion fitting upon the plate and the rib serving as the shoulder to bear against the door. Furthermore, the slide may be made of sheet metal doubled upon itself so as to form the rib and having free ends bent into the proper shapes to form the sleeve portion. I prefer to secure the pin or key to the slide by means of a chain K or other flexible connection so as to prevent it from being lost. This flexible connection with the key serves an additional function of holding the pin or key in place and preventing it from being jarred out of the opening in which it may be seated, and to this end I prefer to make the chain long enough so that it can be wound partly around the plate when the pin or key is inserted in one of the openings, the weight of the chain tending to draw the key farther into the opening.

While I have disclosed in detail a single preferred embodiment of my invention, I

do not desire to be limited to the exact structural details illustrated and described, but desire to cover all forms of my invention falling within the terms of the definitions thereof constituting the appended claim.

What I claim is:

In a door securer, an elongated plate adapted to be inserted between the edge of a door and the jamb, a laterally-extending lip on said plate adapted to enter a recess in the jamb, a slide on said plate adapted to engage with the side of the door, said slide being formed of a piece of sheet metal folded upon itself so as to produce a long, deep rib and having its free ends bent laterally so as to lie against the side of said plate and then folded over the edges of the plate so as to engage with the opposite side thereof, said plate having therein a series of holes so positioned that some one of the holes will be adjacent to the rear end of the slide when the slide is positioned against the door, and a pin of such size as to be received by said holes, whereby the pin may be inserted into the hole nearest the rear end of the slide and lock the slide against the door.

In testimony whereof, I sign this specification in the presence of two witnesses.

FRANK T. ROBINSON.

Witnesses:

WM. F. FRENDENREICH,

BRICENA SWEET.