Draftsman

1,151,297

J. SCHRÖDER.

FLYING MACHINE.

APPLICATION FILED MAR. 18, 1913.

1,151,297. Patented Aug. 24, 1915.

Fig. 1.

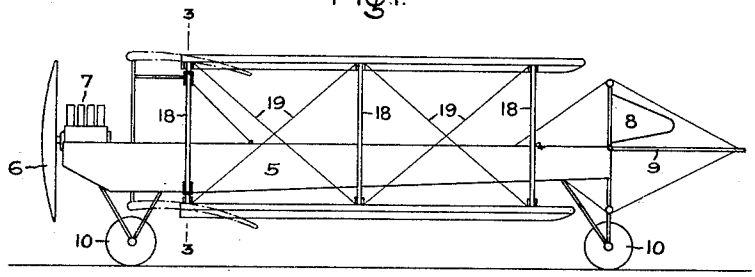

Fig. 2.

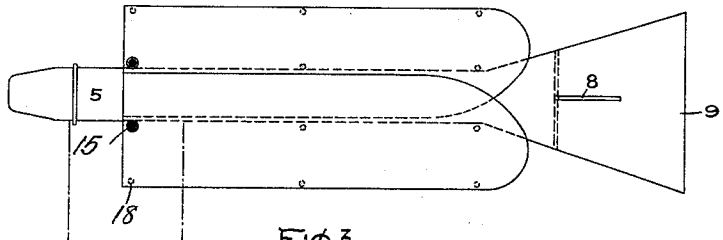

Fig. 3.

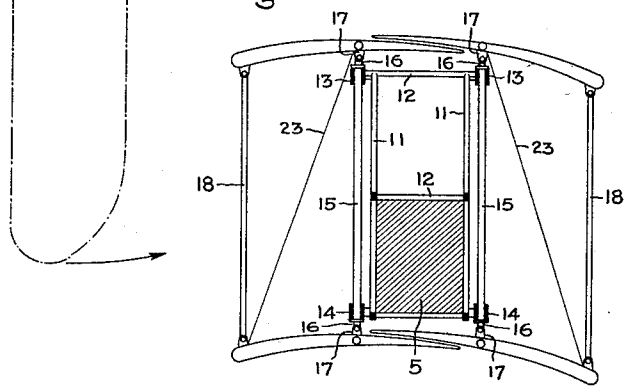

Fig. 4.

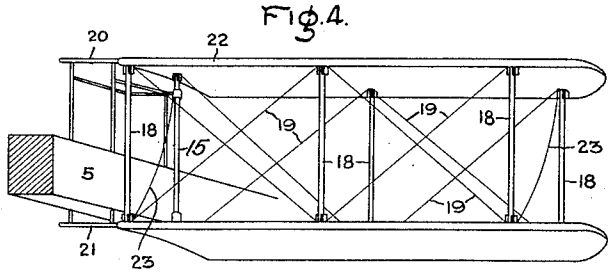

Witnesses
Chas. B. Stokes
J. Ellis Glen

Inventor
Josef Schröder
by Albert G. Davis
His Attorney

COLUMBIA PLANOGRAPH CO., WASHINGTON, D. C.

UNITED STATES PATENT OFFICE.

JOSEF SCHRÖDER, OF TEGEL, GERMANY, ASSIGNOR TO GENERAL ELECTRIC COMPANY, A CORPORATION OF NEW YORK.

FLYING-MACHINE.

1,151,297. Specification of Letters Patent. Patented Aug. 24, 1915.

Application filed March 18, 1913. Serial No. 755,158.

To all whom it may concern:

Be it known that I, JOSEF SCHRÖDER, a subject of the King of Prussia, residing at Tegel, Germany, have invented certain new and useful Improvements in Flying-Machines, of which the following is a specification.

The present invention relates to flying machines of the so-called double or multi-deck type, and has for its object to improve the construction whereby their large planes may be folded or swung back out of the way when it is desired to transport or store them.

In the accompanying drawing, which illustrates one of the embodiments of my invention, Figure 1 is a view in side elevation of a double deck flying machine with its planes folded back; Fig. 2 is a plan view thereof; Fig. 3 is a section on line 3—3 of Fig. 1; and Fig. 4 is a perspective view of the left-hand pair of wings.

5 indicates the body of the machine which is provided with any suitable or usual form of propeller 6, engine 7, rudder 8 and elevating and depressing plane 9. 10 indicates the wheels for supporting the machine on the ground and facilitating its starting and moving about. The axles of the wheels are separated by a distance greater than the length of the planes to permit the lower planes to be folded under the body. In the front of the machine is a suitable frame which, in the present illustration, is rectangular in form and is composed of vertical and horizontal members 11 and 12 respectively. The upper and lower ends of the members 11 carry brackets 13 and 14 in which are rotatably supported the members 15 which in addition to coöperating with the brackets to form hinges for the planes also act as struts therefor, thus serving a double purpose and saving in the number of parts and in weight. Each end of each strut is provided with a head 16 that is pivotally united to a similar head 17 attached to a plane. The joint thus formed permits one pair of planes to be tilted fore and aft with respect to the other pair to enable them to overlap when folded backward over and under the body. The distance between the struts 15 is a little greater than their distance from the rear edges of the planes. This permits of the planes being turned forward or backward without interference. It is preferable from the point of simplicity and strength to permit the struts 15 with the heads to turn in the brackets but the same effect can be accomplished by permitting the heads to turn on the struts. The planes of each pair are connected by the usual struts 18 through hinged connections to permit of their being tilted. Between the planes are the usual stay wires 19.

In order to put the machine in condition for transportation, the front connectors 20 and 21 are loosened and the front cross bar 22 depressed until the wires 23, which have heretofore been slack, become taut. The lengths of these wires are so calculated that the planes assume the positions shown in Fig. 3. That is to say, the wires for one pair of planes are longer than those for the other. After the connectors are loosened and the front bars depressed as above stated, the planes are swung rearwardly on the struts 15 as pivots, and the wires 23 having determined the relative positions of the planes, those of one pair will overlap longitudinally with those of the other pair. Instead of tilting the planes previously to folding them backwardly one pair may be slipped fanwise over the other by lifting or depressing one or both of them by any suitable means.

It will be seen that my arrangement has the advantage of using a single axis of oscillation or movement for each plane of a double or multi-deck machine so that the planes as a whole can be moved without substantial change in their mutual relations. Also that they may be rotated or folded backwardly so that they will inclose the body above and below, at the same time overlapping longitudinally to decrease the overall width. The arrangement also has the merit of great simplicity in construction and operation. With the planes folded back they form a protecting roof against weather influences and further do not obstruct the view of the driver in case the machine is being conveyed on land under its own power. They also present the minimum surface to the air currents.

In accordance with the provisions of the patent statutes, I have described the principle of operation of my invention, together with the apparatus which I now consider to represent the best embodiment thereof; but I desire to have it understood that the apparatus shown is only illustrative, and that

the invention can be carried out by other means.

What I claim as new and desire to secure by Letters Patent of the United Staes, is—

1. In a flying machine, the combination of a body, a frame attached thereto, horizontal planes arranged in pairs on each side of the body, pivotal supports for the planes of each pair, and hinged connections between the frame and the planes whereby the planes on the respective sides may be tilted relatively to each other and swung in horizontal planes into folded overlapping position.

2. In a flying machine, the combination of a body, a frame attached thereto, parallel horizontal planes arranged in pairs on each side of the body, vertically extending spindles that are pivotally connected at their ends to the planes so as to permit the planes on each side to be tilted relatively to each other, and bearings for the spindles which permit them to be turned about a vertical axis whereby the planes on the respective sides may be tilted relatively to each other and swung in horizontal planes into folded overlapping position.

3. In a flying machine, the combination of a body, a frame attached thereto, horizontal planes arranged in pairs on opposite sides of the body that normally extend perpendicularly to the body, and means for pivotally attaching the planes to the frame so that they can be swung rearwardly into parallel relation and tilted relatively to each other to permit them to overlap, the pivot of each pair of planes being located at one end thereof and in the approximate center thereof.

4. In a flying machine, the combination of a rectangular frame, horizontal planes arranged in pairs that normally extend at right angles to the direction of flight, struts that are pivotally connected to the planes of each pair to enable one pair to be tilted with respect to the other to permit overlapping, and brackets attached to the frame top and bottom in which the struts are rotatable to permit the planes to be swung rearwardly into parallel and overlapping relation.

5. In a flying machine, the combination of a body having horizontal planes arranged in pairs on each side, means for pivotally connecting the planes to the body, means supporting the planes so that each pair can tilt separately, and means permitting one pair to tilt by a greater amount than the other to permit said pairs to overlap when folded over the body.

6. In a flying machine, the combination of a body having horizontal planes arranged in pairs on each side, means for pivotally connecting the planes to the body, means supporting the planes so that each pair can tilt separately, means permitting one pair to tilt by a greater amount than the other to permit said pairs to overlap when folded over the body, and detachable connectors which normally unite the planes by connecting the forward members thereof.

In witness whereof, I have hereunto set my hand this 24 day of February, 1913.

JOSEF SCHRÖDER.

Witnesses:
PAUL RUMPF,
RICHARD SCHWINN.

Copies of this patent may be obtained for five cents each, by addressing the "Commissioner of Patents, Washington, D. C."