Sept. 12, 1939. F. VON MADALER ET AL 2,173,048

PORTABLE SOUND RECORDING AND SOUND REPRODUCING MACHINE

Filed March 11, 1937 4 Sheets-Sheet 1

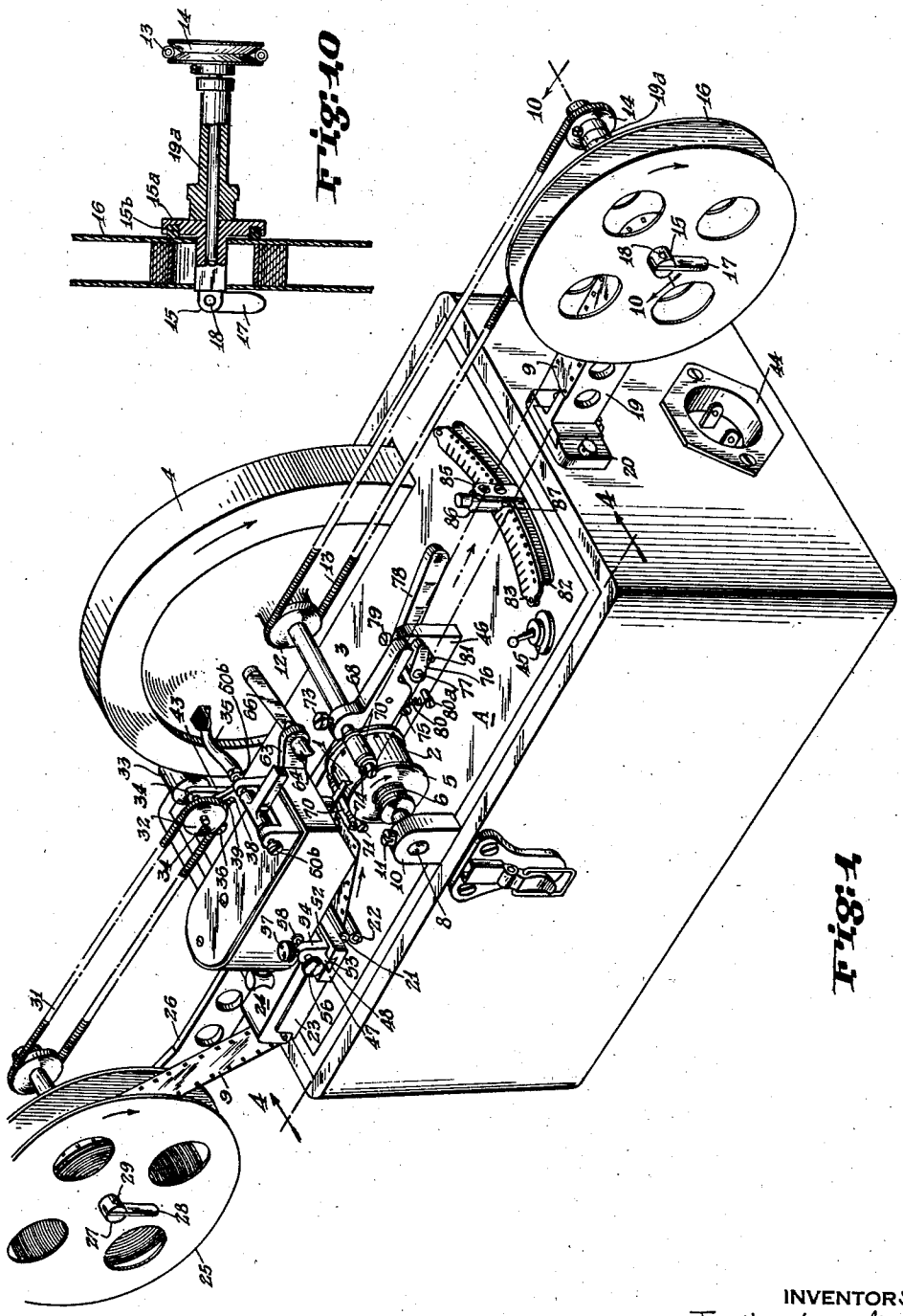


INVENTORS:
Ferdinand von Madaler
BY William L. Woolf
Martin T. Fisher,
ATTORNEY.

Sept. 12, 1939. F. VON MADALER ET AL 2,173,048

PORTABLE SOUND RECORDING AND SOUND REPRODUCING MACHINE

Filed March 11, 1937 4 Sheets-Sheet 2

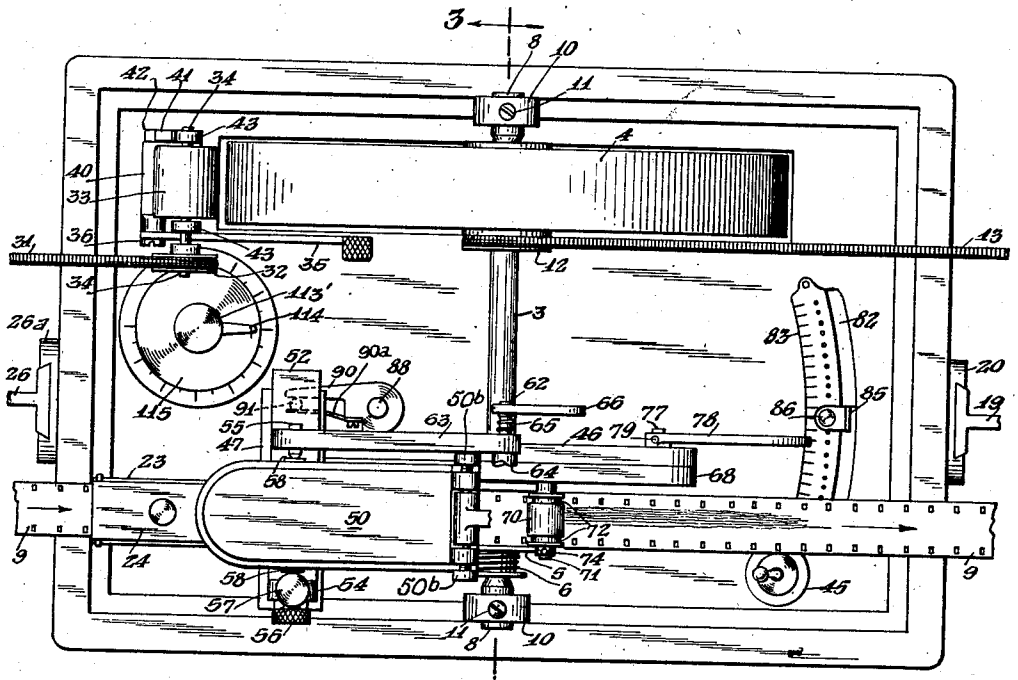

Fig. 2

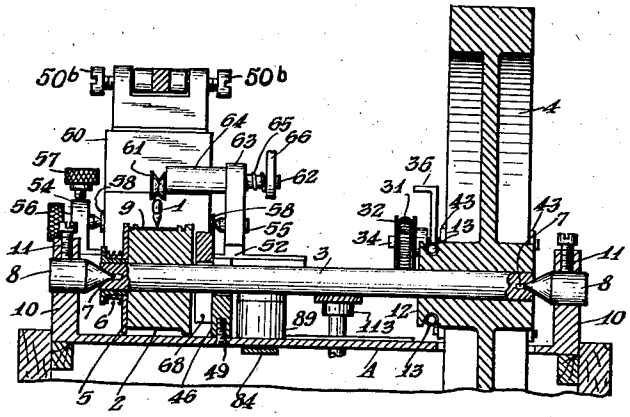

Fig. 3

INVENTORS:
Ferdinand von Madaler
BY William L. Woolf
Martin T. Fisher,
ATTORNEY.

Sept. 12, 1939. F. VON MADALER ET AL 2,173,048

PORTABLE SOUND RECORDING AND SOUND REPRODUCING MACHINE

Filed March 11, 1937 4 Sheets-Sheet 3

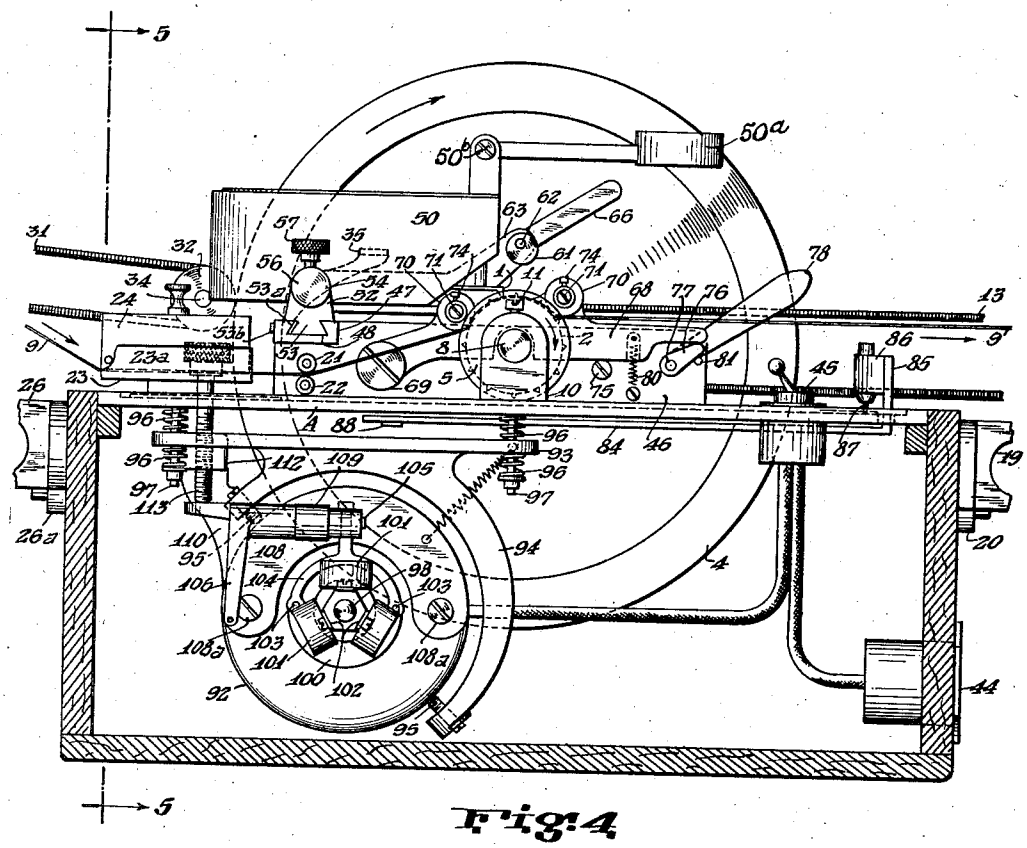

Fig. 4

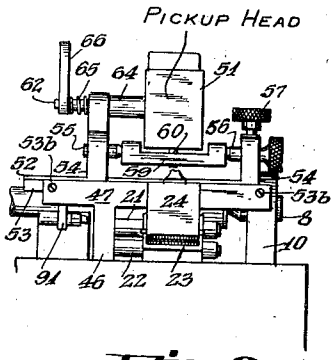


Fig. 9

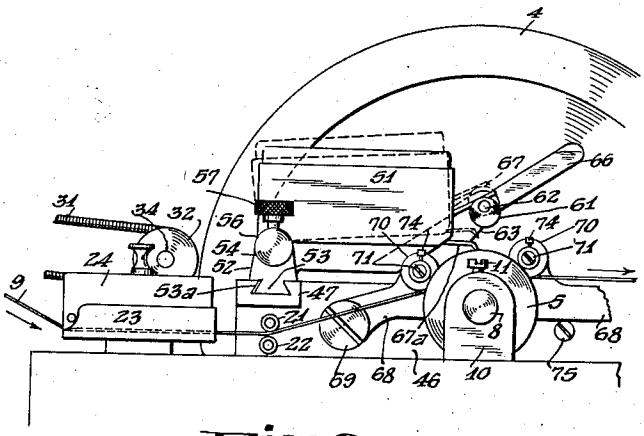

Fig. 8

INVENTORS:
Ferdinand von Madaler
BY William L. Woolf
Martin T. Fisher,
ATTORNEY.

Sept. 12, 1939. F. VON MADALER ET AL 2,173,048

PORTABLE SOUND RECORDING AND SOUND REPRODUCING MACHINE

Filed March 11, 1937 4 Sheets-Sheet 4

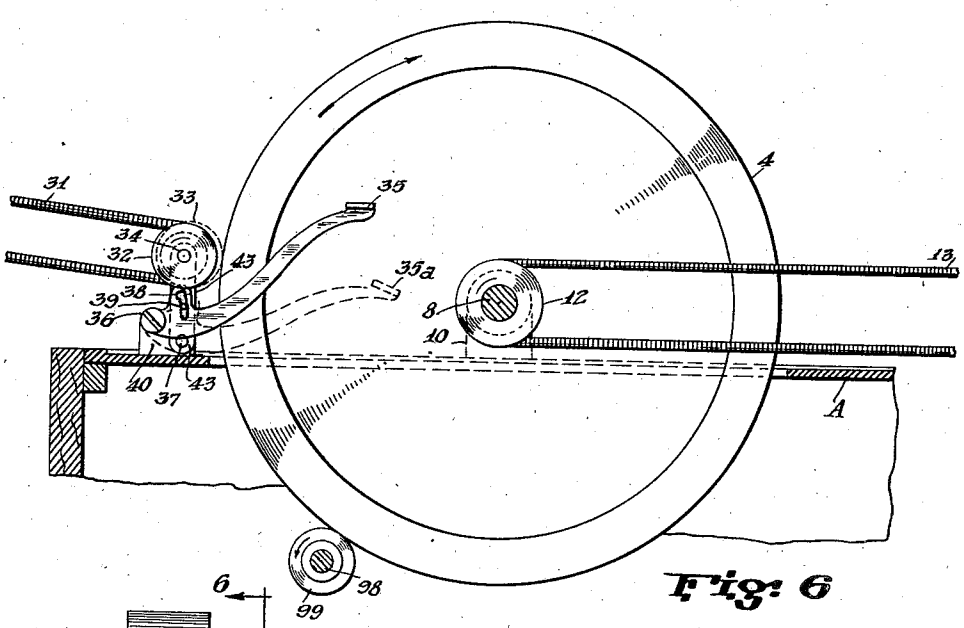

Fig: 6

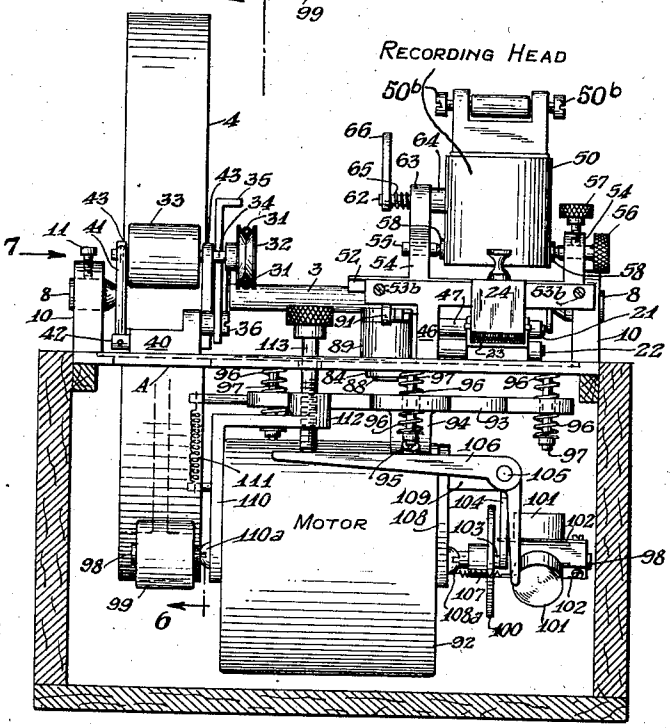


Fig: 5

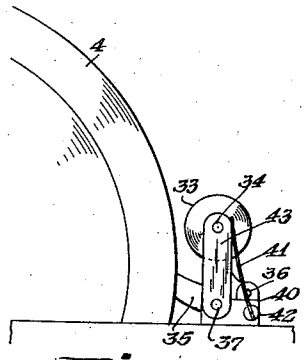

Fig: 7

INVENTORS:
Ferdinand von Madaler
BY William L. Wolf
Martin T. Fisher
ATTORNEY.

Patented Sept. 12, 1939 2,173,048

# UNITED STATES PATENT OFFICE

2,173,048

## PORTABLE SOUND RECORDING AND SOUND REPRODUCING MACHINE

Ferdinand von Madaler, West Hempstead, Long Island, and William L. Woolf, Bayside, Long Island, N. Y., assignors to Film Recording Corporation, a corporation of New York

Application March 11, 1937, Serial No. 130,400

3 Claims. (Cl. 274—11)

This invention relates to a device for recording sound vibrations on a strip of film for reproduction purposes, and also for reproducing sound from such a record.

One of the objects of the invention is to provide a device of this nature, small in dimensions, neat in appearance, positive in action, and of a form and design which may be readily and inexpensively manufactured.

Another object is to produce a recording and reproducing device which is free from extraneous noises usually present in moving picture cameras and projectors or similar machines wherein a continuous strip of film is involved.

The instrument includes among its more essential elements a sprocket wheel provided with teeth which mesh into the conventional perforations of moving picture type film. If desired, a roller may be used instead of the sprocket wheel. The rotation of the sprocket wheel propels the film forward in the usual manner employed in moving picture cameras and projectors. A recording head is provided with a stylus, the point of which presses into the film to form the vibration groove. When the stylus is not being vibrated by sound pulsations, however, the forward movement of the film would cause the stylus to inscribe a straight groove on the film. A cross section of the groove is roughly V-shaped with a depth of approximately .002 inch and a top width of approximately .003 inch.

The recording head is so constructed that when actuated by alternating or interrupted current, the stylus vibrates transversely to the motion of the film, thus causing the stylus to inscribe a wavy groove in the film, the number of waves corresponding to the frequency of the currents causing vibration of the stylus. If these currents are modulated by frequencies arising from the voice or musical instruments, the groove will then be of a wavy pattern having a frequency corresponding to the frequency of the actuating currents and the sound waves modulating them. The amplitude of the recorded waves will bear a direct relationship to the intensity of the sound waves so that by retracing the groove with a pickup stylus and amplifying the currents induced thereby and reproducing them through a loud speaker, sounds will be reproduced in frequency and volume similar to the original recorded sound.

Among the more important elements of this device are the sprocket wheel and stylus, these elements being the only members which operate directly upon the film. The stylus is attached to a recording head which controls the movement thereof while the sprocket is mounted on a spindle, in bearings; a flywheel is provided on the same spindle to drive the sprocket at a uniform speed. A motor, having a governor, drives the flywheel; receiving and releasing reels carry the film; and rollers are provided to hold the film in operative relationship with the sprocket. A mounting member is provided to carry the recording head, the head being adapted to be moved transversely to the motion of the film in graduated steps in order that a large number of closely spaced grooves may be recorded on a single strip of film. The entire assembly is mounted on a base plate, the same being carried in a portable carrying case.

This device will be understood in more detail by referring to the attached drawings in which like numbers refer to like parts.

Figure 1 is a perspective view of the device according to this invention;

Figure 2 is a top plan view of Figure 1 omitting the reels;

Figure 3 is a transverse, vertical sectional view on line 3—3 of Figure 2, showing the pick-up V-notch in place;

Figure 4 is a longitudinal vertical sectional view, on line 4—4 of Figure 1;

Figure 5 is a transverse, vertical sectional view, on line 5—5 of Figure 4;

Figure 6 is a vertical longitudinal sectional view, on line 6—6 of Figure 5;

Figure 7 is a fragmentary view of Figure 5, looking in the direction of the arrow 7 of Figure 5;

Figure 8 is a fragmentary side elevation showing the pickup structure and its mounting means;

Figure 9 is a fragmentary rear elevation of the pickup structure and its mounting means; and

Figure 10 is a fragmentary vertical elevation, partially in section, on line 10—10 of Figure 1.

Referring to the accompanying drawings, a box-like casing is provided on the top of which there is provided a base plate or mounting member A on which most of the various elements are compactly and operatively mounted. The recording head 50 carries a stylus 1, provided with a recording point, which is adapted to cut a groove in the film as it is moved past the same in the direction of the arrow by the engagement of the sprocket 2 with the film. Movement of the stylus is controlled by the mechanism included in the recording head 50. The sprocket consists of a wheel bearing two rows of teeth,

each row engaging perforations in either side of the film, in the conventional manner.

The construction of the sprocket is an important feature of the invention. It may either be made of one piece or of two outer disks and a central cylinder. In either case the central cylindrical portion between the rows of teeth is ground to a mirror finish and preferably hardened. The central portion is left from one to a few thousandths of an inch larger in diameter than the two outer disk shaped portions which bear the two rows of teeth. This construction has been found to facilitate the conformation of the film to the sprocket wheel and to minimize sprocket wheel noises.

The sprocket wheel teeth are formed with a base of such design that the transverse dimensions of said base portion are slightly less than the dimensions of the film perforations so that as the film contracts and expands with changes of temperature and to some extent with aging, the sprocket wheel will operate smoothly and silently in contact with the film at all usual temperatures and with film of various ages. The sprocket is designed to operate successfully at room temperatures ranging from 45 to 95 degrees F., the sprocket wheel dimensions being undersize sufficiently to accommodate the expansion and contraction of the film material within that range of temperature. For practical purposes the base dimensions of the teeth may be considered to be 98% (or less) of the dimensions of the film perforations at normal room temperature.

Sprocket wheel 2 is also provided on one side with a fixed guide flange and on the opposite side with a movable flange or guide plate 5 which is dished toward the sprocket center, the same being spring pressed against the edge of the film as it passes over the sprocket wheel by the spring 6.

The sprocket is mounted on a main spindle 3, on which a flywheel 4 is also mounted, the flywheel being of such design that the central portion consists of a thin web or flange joining the hub and rim portions, the major portion of the weight being concentrated near the periphery of the wheel. This flywheel is provided with a pulley 12 which drives a spring belt member 13, and driving pulley 14 on the take-up or receiving reel 16. The flywheel spindle 3 is provided with conical, inwardly directed ground and hardened bearings 7 at each end, into which are fitted complementary, conical, hardened, bearing spindles 8. This type of bearing has four distinct advantages. First, it provides a simple means of taking up wear that occurs on the bearings; second, it keeps the main spindle, and consequently the sprocket, perfectly centered at all times, thus eliminating noise waves or change of pitch usually due to eccentric bearings; third, it permits a minimum of machine noises to be transmitted through the bearings, probably due to the smallness of the transmitting surface; and, fourth, the diameter being small, the velocity of the frictional bearing surface is low and any noise generated is of low intensity. These bearing spindles are mounted in bearing posts 10 which are cast integrally with the base plate A. Set screws 11 hold these bearings in place in the desired adjustment.

Removably supported on one end of the portable carrying case is an arm 19 which supports the receiving reel 16 on a rotatable shaft 15 driven by the pulley 14. A bearing 19a supported by arm 19 rotatably supports shaft 15. Arm 19 and the bearing 19a are preferably in one piece, and the bearing axis is at right angles to the central axis of the arm 19.

A key 17, pivotally mounted on a pivot 18 in a slot in the end of shaft 15, serves to lock the reel 16 to the shaft 15 and against slipping off the end thereof. Shaft 15 is formed with a flange thereon faced with soft rubber or felt 15b mounted in an annular groove 15a in the flange face. When the reel 16 is mounted on the shaft 15, one side thereof is disposed against said rubber or felt. By such construction, vibrations normally arising from the reel vibrations attendant to reeling film are damped out.

Arm 19 is removably attached to the base A by means of a truncated V-shaped end flange member which snugly fits a complementarily shaped groove in a plate 20.

In packing the apparatus for carrying, the reel-carrying arms 19 and 26 are removed from their supporting brackets, and packed in a suitable carrying case with the rest of the apparatus.

Guide rollers 21 and 22 are provided on the opposite side of the sprocket from receiving reel 16 to prevent the film from rubbing against adjacent parts. These rollers are spaced closely together, leaving only a narrow slot between them and are mounted on stud shafts projecting horizontally from the upright support 46.

Before the film passes through the narrow opening between the rollers 21 and 22, it passes over a guide plate 23 mounted on a block supported by base plate A, said guide plate being provided with upstanding side flanges 23a, which guide the film to eliminate any lateral movement and align the film with sufficient accuracy to enable the film perforations to mesh with the sprocket wheel teeth at all times. The upper surface of the guide plate 23 is disposed below but substantially parallel to the film and is covered with felt or velvet material. As the film passes over the bed portion this material removes any dust from the under side of the film, thus eliminating any dust grains between the film and the smooth surface of the central portion of the sprocket wheel between the rows of teeth, over which surface the recording takes place.

A weight 24 is provided, which is adapted to rest on the film over the plate 23 and between the upstanding flanges 23a, said weight being provided with an enlarged portion or transverse pin at its approach end which is adapted to contact the flanges to prevent the film carrying the weight forward. This is clearly shown in Figs. 1 and 4. The bottom surface of the weight 24 is also covered with felt or velvet adapted to clean the upper or groove carrying side of the film, to remove any dust from said surface.

A supply reel 25 carrying the film to be grooved is mounted on a bracket 26 at the left of the device, as seen in Fig. 1. This reel 25 releases its film to pass between the sprocket wheel and the stylus and on to the receiving reel 16. The supply reel 25 is removably supported on a shaft 27 extending transversely from arm 26 and is held thereon by a pivoted key 28. The arm 26 is supported by block 26a in the same manner that arm 19 is supported by block 20.

The opposite end of shaft 27 from that supporting the reel 25 is provided with a driving pulley 30 driven by a spring belt 31, driven by a pulley 32. Pulley 32 is driven by the rubber or rubber faced wheel 33; pulley 32 and wheel 33 being mounted on opposite ends of shaft 34.

When the device is in operation for record-

ing or reproducing, the pull of the sprocket wheel 2 on the film 9 causes the supply or releasing reel 25 to rotate in a clockwise direction. During such operation the rewind driving wheel 33 is out of contact with the flywheel 4 (Fig. 2). For rewinding purposes, however, the rubber or rubber faced rewind wheel is pressed against the flywheel. The clockwise motion of the flywheel causes a counterclockwise rotation of the rewind pulley 33, which in turn causes the reel 25 to rotate in a counterclockwise direction and rewind the film. During such operation, the film is not engaged by the sprocket 2 but is passed around it or a releasable clutch member may be provided between the sprocket and the shaft 3.

When it is desired to bring the rewind pulley 33 into contact with the flywheel 4 and hold it there, there is provided a lever 35 attached by a pivot 36 to a base block 40, see Fig. 6. Attached to the same block 40 by a pivot 37 is a frame structure composed of links 43 vertically disposed, the lower ends of which are rotatably pivoted at 37, one to each side of the base member 40. The upper end of each link 43 is provided with a bearing which supports opposite ends of shaft 37 between the links 43. The pulley 32 and rewind rubber wheel 33 are attached to shaft 34, the three pivoting as a unit in the bearings provided in the upper ends of links 43. Lever 35 contains a slot 38. A pin 39 is attached to the innermost link 43, projecting transversely therefrom and into this slot. The rotation of the lever 35 about its pivot 36 causes the pin 39 to transverse the length of the slot 38. Thus, when the free end of the lever is depressed, as shown at 35a (Fig. 6) the pin 39 occupies the upper end of the slot at the end of such movement and the shaft 34 carrying rubber pulley 33 is simultaneously forced to the right against the flywheel 4. The upper end of the slot 38 is provided with an offset portion, which is adapted to receive the pin 39 when the end of the slot 38 is reached, thus holding the lever 35 in this position until the free end of the lever is moved upwardly at which time the pin 39 is forced from the offset slot to disengage the rubber pulley from engagement with the flywheel.

To assist in pressing pulley 33 toward flywheel 4, a leaf spring 41 held in position by a holder 42 mounted in base block 40 is disposed to press the upper end of the outside link 43 toward the flywheel, see Figs. 2 and 5.

An upstanding rib 46 is centrally mounted on the upper side of the base plate A with its longitudinal axis substantially parallel to the longitudinal axis of the base plate and is secured by mounting screws 49, as shown by Fig. 3. This central rib serves as a support for a number of members hereinafter described.

Attached to one end of the central rib and at right angles thereto is a transversely extending guideway 47, Figs. 2, 4 and 8, provided with a groove, the cross-sectional shape of which is a truncated inverted V.

The recording and pick-up heads 50 and 51 are provided with suitable electromagnetic means for converting varying electrical currents into mechanical movements of the stylus, or for converting movements or vibrations of the stylus to corresponding electrical currents, as is well understood in this art.

The recording head 50 (Fig. 1) and pickup head 51 (Fig. 9), which are adapted to be substituted for each other, are removably mounted on a carriage 52 provided with a truncated V-shaped tongue 53 mounted and slidable in groove 48, such arrangement permitting the carrier to move transversely to the movement of the film but not permitting it any other motion. Sufficient clearance is provided between the walls of the groove and tongue to permit insertion of a take-up plate 53a (Fig. 4) which is adapted to be pressed against the side of the tongue 53 by screws 53b. Any wear in the tongue and groove are taken up by tightening the screws 53b, thus permitting a snug fit between the tongue and groove at all times so as to prevent undesirable play or wobbling. The screws 53b may also serve, if desired, to lock the carriage in adjusted position.

The sound recording head 50, as clearly shown in Fig. 4, has a weight 50a carried by an arm pivotally mounted at one end thereof. Such a mounting affords an adjustable pressure for the groove forming stylus 1 when acting on the film 9. The weight may be held in any desired position with respect to the head from that shown in Fig. 4 to 180° in the opposite direction, in which position it will be directly over the pickup head. The effective pressure exerted by the weight on the stylus depends on the angular position of the weight, different angular positions of the weight giving different horizontal components for the lever arm with respect to its fulcrum 56. The arm may be held in any desired angular position by the supporting and locking bolts 50b clearly shown in Figs. 1 through 5.

Vertically mounted on the carriage 52 are two standards 54, each being drilled to receive bearing spindles 55 and 56. Spindle 55 is held in fixed position in its standard while the spindle 56 is adjustably held in position in its standard by thumb screw 57. When the mechanism is to be employed in recording, the recording head 50 is pivoted between the bearing spindles 55 and 56, the points of which are inserted into complementary recesses formed in bearing blocks 58, provided on the sides of the recording head 50, Fig. 5. When the mechanism is employed in a reproducing capacity, however, a sound pickup head 51 replaces the recording head shown in Fig. 9. The pickup head is also provided with bearings 58 similar to those on the recording head both in design and location.

Bearings for the pickup head are formed in either end of a pivot bar 59 which supports the head, as is clearly shown in Fig. 9. The pickup head 51 is attached to the block 59 by means of a swivel 60. Thus, whereas the recording head is rigidly held against horizontal movement, the pickup head is free to follow the course of the groove. This arrangement has been found very suitable to prevent the pickup needle from jumping out of the groove.

The pickup head is also provided with a centering pin 67 (see Fig. 8) projecting from its forward end. This pin 67 is adapted to rest in an annular centering groove 61 (see Fig. 3) circumferentially formed in a narrow cylindrical portion eccentrically mounted on one end of spindle 62, by which means the pin 67 is adapted to be lowered until the reproducing needle 67A fits into the recorded groove. By this means, the uncertainty of lateral position permitted by the swivel is overcome and the pickup needle is lowered positively into its groove. Rigidly attached to the carriage 52 is an upwardly projecting standard 63 having a laterally extending bearing member 64 which pivotally supports spindle 62. Projecting laterally from the end of spindle 62 opposite groove 61 an operating handle 66 is attached, the same being oper-

able to manipulate the eccentric portion to lower needle 67A, Fig. 8, into the sound groove on the film. A spring 65 (Fig. 3) is disposed about spindle 62 and is adapted to take up any play or wear occurring between the eccentric portion and the adjacent end of bearing members 64.

Also pivotally mounted on the central rib 46 is a lever 68, see Figs. 2 and 4. This member is supported by a pivot member 69 and a range of movement of about 10° or 15° in a vertical plane is afforded this lever. Laterally extending from the lever 68 are two spindle or shaft-like members 71. Integrally formed on the shaft members 71 at the attaching ends are stub ends, eccentric to the longitudinal axis of the spindles in order that the spindles 71 might be adjusted in location with respect to the lever by manipulating the eccentric ends in the lever 68. The spindles are held in adjusted position by set screws 73, Fig. 1. Mounted on each spindle is a roller member 70, held thereon by stop pins 74. These rollers are adapted to press the film against the sprocket wheel 2. Spaced circumferential grooves 72 (Fig. 2) are provided about the periphery of each roller to accommodate the teeth of the sprocket 2. When film is to be introduced into the device so as to pass over the sprocket, the lever 78 is raised sufficiently to lift the rollers 70 away from the sprocket to permit the insertion of the film.

Also laterally extending from one vertical wall of the upstanding rib 46 is a headed stop member 75 (Figs. 1 and 4) which determines the lowest extent to which the lever 68 descends. When the lever is resting on the stop member, the eccentric mountings of the spindles 71 are so adjusted that the outer periphery of the rollers is spaced from the periphery of the sprocket wheel just sufficiently to permit the passage of the film therebetween.

Lever 68 is controlled by cam 76 mounted upon a shaft 77 which, in turn, is rotatably mounted in a bearing provided in the rib 46. A laterally extending stop member 81 (Fig. 4) limits the downward movement of the cam. Rigidly mounted on the shaft 77, on the opposite side of the rib 46, by means of a set screw 79, is an operating lever 78 by means of which the cam 76 is manipulated. Elevation of the lever 78 will elevate the cam 76 which, in turn, elevates the free end of lever 68. The free end of the lever 68 is maintained in engagement with the stop 75 or the cam 76 by means of a tension spring 80 which also simultaneously serves to maintain the roller members 70 in engagement with the film surface so that the film is properly engaged by the sprocket wheel.

Mechanism is also provided within the scope of this invention whereby a large number of sound grooves located side by side may be recorded on the film and subsequently reproduced therefrom. The structure permitting this includes a lever 84 mounted parallel to and below the base plate A, and pivoted to the base plate by a stub shaft 88 (Figs. 2 and 4), rotatably mounted in a bearing in base plate A and extending through the base plate to the upper side thereof. The free end of the lever 84 has a projection 85 extending upwardly therefrom having mounted thereon a block-like member 86 which contains a bearing for an adjustment maintaining member 87. The end 85 of the lever 84 projects through an arcuate slot 82 in the base plate A. Adjacent the concave side of this slot is a gauge member 83 having suitable indicia marked thereon and also having suitable holes formed therein at regularly spaced intervals into which the adjustment maintaining member 87 is adapted to be inserted to hold any given adjustment. The adjustment member may be preferably spring-pressed so that its location in any given setting may be assured.

Rigidly mounted on the end of shaft 88 which extends above the base plate A is a hub member 89. Projecting tangentially from the upper end of hub 89 is a finger-like member 90 extending substantially parallel to the lever 84. Mounted substantially parallel to but spaced from the finger 90 is a leaf spring member 90*a*. Vertically projecting downwardly from the under side of the carriage 52 is a pin 91 which is engaged between the finger 90 and spring 90*a*, whereby movement of the spring and finger will be directly and accurately transmitted to the pin 91. By means of this construction the leaf spring presses the pin 91 against the finger 90 and thus takes up any wear that might occur on the pin through long use. It is thus obvious that movement of the projection 85 of lever 84 will be transmitted through pin 91. Since the ratio of the distance between pin 91 and shaft 88 and the distance between shaft 88 and projection 85 is quite large, being 1 to 6 or 1 to 8, it will be clear that a relatively large movement of the projection 85 will correspondingly transmit a much smaller movement to the pin 91 on carriage 52. Thus it will be seen that the relatively small spacings between the adjusted positions which might be obtained on carriage 52 and correspondingly on the recording head 50 and the pickup head 51 will enable this device to either produce or record from quite a plurality of closely spaced, substantially parallel grooves on the film 9 previously mentioned.

Electrical power is supplied to the device through a plug member 44 located on one end of the casing (Figs. 1 and 4) from whence it is conducted to a switch 45 and then to motor 92 suspended from the underside of base plate A. The mounting means of the motor comprises a plate 93 disposed generally parallel to base plate A and having vertically depending therefrom a somewhat crescent-shaped bracket member 94 in which the motor 92 is pivotally mounted on spindle members 95 in such a way as to permit partial rotation of the motor about said spindles. The ends of the spindles are conical in shape and extend into recesses in the motor housing complementary in shape to the ends of the spindles.

Plate 93 is suspended from vertically disposed rods 97 depending from the underside of plate A. Holes are provided in plate 93 to receive rods 97 about which spiral springs 96 are disposed between the base plate A and plate 93 and between the latter and nuts mounted on the lower ends of rods 97. Suitable rubber shock absorbing members may be substituted for springs 96, if desired.

The main shaft 98 of the motor 92 extends from either end of the motor sufficiently to accommodate the several elements about to be described. On the end of the motor shaft adjacent the flywheel 4 is mounted a driving pulley 99 adapted to engage the outer rim of the flywheel, the pulley preferably being made of rubber so as to insure efficient frictional contact with the flywheel. The pulley 99 is resiliently held against the flywheel rim by means of a spring member 111 which is attached at one end to a projection extending from the end of the motor adjacent the flywheel (see Figures 4 and 5) and at the other end to a projection extending from the motor mounting

plate 93. Due to the yoke structure 94 supporting the motor by means of spindles 95 the motor 92 is adapted to be slightly rotated in the yoke as described above. The spring 111 utilizes the advantage thus afforded by the motor being pivoted to constantly urge the pulley end of the motor and the pulley 99 toward the rim of the flywheel.

On the opposite end of the motor shaft 98 from the pulley 99 is mounted a governor structure of a substantially conventional type, comprising leaf spring members 102 which are disposed substantially parallel to the motor shaft when the motor is idle. These spring members are rigidly attached at one of their ends to a supporting member which is affixed to the shaft 98 and midway of their length each spring has attached thereto a circular weight member 101. The opposite ends of the spring members 102 from the ends attached to the supporting member are connected to a plate-like member 100 which serves the function of a brake disk and the plane of the same is transverse to the axis of the shaft 98. Rigidly mounted on the motor casing adjacent the brake disk 100 is a supporting plate 108 having a laterally extending arm 109 projecting therefrom and substantially parallel to the motor shaft. The outer end of arm 109 is provided with a bearing which supports shaft 105. Rigidly mounted on shaft 105 is a yoke-like member 104 which is disposed normally substantially parallel to brake disk 100. The central portion of yoke 104 is rigidly attached to the shaft 105 so that any movement imparted to the shaft will correspondingly be imparted to the yoke. The outer free ends of the yoke support felt brake shoe members 103 adapted to bear against the brake disk 100. As the motor shaft gains in speed the weight members 101 are gradually thrown outwardly, thus shortening the distance between the ends of the springs 102, thus urging the brake disk 100 in the direction of the end of the shaft carrying the governor and against the brake shoe members 103.

Also rigidly mounted on the shaft 105 is a bell crank member 106. One leg of the bell-crank is longer than the other and extends generally parallel to the motor shaft. The second, shorter leg extends substantially perpendicular to the first leg and has attached to the lower end thereof a spring member 107. The opposite end of this spring member is attached to the plate 108. Such construction constantly pulls the lower end of the bell crank toward the plate member 108 and in doing so will likewise urge the yoke 104 carrying the brake shoes 103 toward the brake disk 100. Movement of the brake shoes in this direction, however, is limited by means of a threaded stop member 113 engaging the long arm of the bell crank lever 106. Member 113 is supported by a bracket member 110 rigidly mounted to the opposite end of the motor from plate 108 by means of threaded studs 110a. The bracket 110 has a portion extending parallel to and over the upper portion of the motor casing which supports a threaded bearing portion 112 through which is threaded the stop member 113.

The stop member 113 has a knurled head 113' rigidly affixed to its upper end which is above the upper surface of the base plate or mounting member A. A suitable aperture is provided in the base plate A having sufficient clearance with respect to the stop member 113 that it not only allows the stop member to pass therethrough but also affords it considerable lateral movement, whereby any vibrations of the motor or any movement of the motor due to its being pivoted about the pinions 95 will not be transmitted to the base plate or any of the structures supported thereby.

Surrounding the aperture in the base plate A which accommodates the stop member 113 is a disk 115 having graduated indicia thereon, reading in frames per second of the film but any other reading may be indicated thereon such as revolutions per minute of the motor. Laterally extending from one side of the stop member 113 is a pointer or indicating member 114 which is adapted to be used in conjunction with the graduations on the disk member 115 to properly set the stop member 113.

By virtue of the foregoing mechanism, the motor will drive the flywheel and cooperating parts at a constant, predetermined and regulable speed.

From the above description it will be apparent that numerous advantages are to be obtained from the construction described, among the more salient of which advantages are the following:

Perhaps the most outstanding advantage is the substantially total elimination of noise and vibration throughout the device generally. The principal elements contributing to such elimination are the mounting of the motor on pinions 95 and supplementary thereto the mounting of the motor supporting plate 93 on either spring or rubber cushion members so as not to transmit vibration to the base plate which, in turn, supports all of the other essential units of mechanism of the device. In most instances where driving is transmitted from one member to another, the same takes place through either rubber or rubber surfaced pulleys or driving wheels, which tends to eliminate vibration and noise. All surfaces where there is rolling or sliding contact such as the outer rim of the flywheel, the spocket wheel drum, and the friction surface of the brake disk 100 are highly polished and as smooth as it is practical to obtain so as to eliminate any vibrations which would otherwise be due to irregularities in such surfaces. The concentration of most of the weight of the flywheel in the rim thereof tends to assure a uniform angular velocity of the flywheel.

It is also to be noted that the ratio between the diameters of the flywheel and the sprocket member is relatively large, thus affording considerable reduction in any small variations of speed as might possibly occur at the rim of the flywheel which would be transmitted to the sprocket member. Similarly, the comparatively lower velocity of the sprocket wheel periphery compared to the flywheel velocity results in a minimum of sprocket wheel noise. In this connection, vibration and noise is also greatly reduced due to the nature of the spindle and bearing structure provided at either end of the main shaft 3. The spindle members are ground as near perfectly conical in shape as possible and are hardened to a high degree. Since the bearings of the shaft 3 are located at the very extremity of each end, a minimum of vibration or wobble will be created or transmitted as a result of any shaft vibration. Similarly, the bearing surfaces between the conical spindles and the bearings at the end of the various shafts are very small in diameter compared to the diameter of the shafts so that the velocity of the rotating bearing surfaces is relatively low, thus tending to reduce vibration and noise.

Great care is also exercised in the production of the sprocket wheel. The cylindrical portion of the wheel between the two sections is hardened and ground to a polish mirror-like surface, thus affording a perfectly smooth floor on which the recording and reproduction takes place. The dust removing members described above and provided on the members 23 and 24 insure that no foreign particles will be disposed between the film and the mirror surface of the sprocket wheel which might create vibrations if permitted to become disposed between the film and this surface. Also, the film pressure and guide rollers 70 are adapted to be adjusted in order to insure the proper positioning of the film against the mirror-like surface of the sprocket wheel and hold it relatively taut thereon so that recording or reproducing on the film is accomplished while the film is held against any vertical movement. Lateral movement of the film is eliminated on the sprocket due to the spring pressed flange member 5.

In all of the reeling mechanism driving takes place through rubber or rubber surfaced driving wheels and coil spring belts which tend to eliminate the transmission of vibrations and noise.

The device is also constructed so that the mechanisms are relatively fool proof and thus insure against injury thereto in the event the same were operated by careless or unskilled operators. Among the more salient features in this connection is the means provided for lowering the guide rollers 70 against the film which consists of the cam or eccentric member 76 operated by levers 78. The length of the eccentric is such that the rollers are raised the proper amount to allow ready threading of the film through the sprocket, yet when the member carrying the rollers is lowered the stop member 75 will insure that the rollers are lowered only the proper distance and no more. Likewise, while being lowered, the end of the lever carrying the rollers is constantly maintained in contact with the cam by means of the spring 80, thus eliminating any jar or jolt due to a gap occurring between the end of the lever and the cam member while being moved.

Another advantageous feature of the above described construction resides in the mechanism for lowering the pick-up mechanism into contact with the film. This mechanism involves chefly the rotatable eccentric member 61 having the groove therein which cooperates with the centering arm 67 extending from the pick-up head. The adjustment of the mechanism is such that the needle member may be positioned in the desired groove with an accuracy less than a thousandth of an inch and the lowering of the stylus will take place without any jar or digging into the film.

Numerous other advantages are incorporated in the structure described, which will be obvious to those skilled in the art. Nor is it intended to limit the scope of this invention to the particular mechanism described, but it is intended to cover by this invention mechanism which might be performing similar functions and accomplishing similar results.

We claim as our invention:

1. In a sound reproducing and recording mechanism, the combination of a stylus and supporting head therefor for use with a record medium; a support for said head and stylus comprising a carriage slidably mounted to position said stylus at a plurality of different transverse positions relative to the path of movement of said record medium, means to move said carriage comprising a pivoted lever, means on one end of the lever engaging the carriage to move it in one direction and a second means on the lever resiliently engaging the carriage to bias it into engagement with the first mentioned means on the lever, and means on said lever opposite said carriage engaging means by which said lever may be operated.

2. In a sound reproducing and recording mechanism, the combination of a stylus and supporting head therefor for use with a record medium; a support for said head and stylus comprising a carriage slidably mounted to position said stylus at a plurality of different transverse positions relative to the path of movement of said record medium, means to move said carriage comprising a pivoted lever, means on one end of the lever engaging the carriage to move it in one direction and a second means on the lever resiliently engaging the carriage to bias it into engagement with the first mentioned means on the lever, and operating means on said lever opposite said carriage engaging means including means to lock the lever and stylus in adjusted position.

3. In a sound reproducing and recording mechanism, the combination of a stylus and supporting head therefor for use with a record medium; a support for said head and stylus comprising a carriage slidably mounted to position said stylus at a plurality of different transverse positions relative to the path of movement of said record medium, means to move said carriage comprising a pivoted lever, means on one end of the lever engaging the carriage to move it in one direction and a second means on the lever resiliently engaging the carriage to bias it into engagement with the first mentioned means on the lever, operating means on said lever opposite said carriage engaging means including means to lock the lever and stylus in adjusted position, and indicia adjacent the path of the lever operating means.

4. In a sound reproducing and recording mechanism, the combination of a stylus and supporting head therefor for use with a record medium, a support for said head and stylus comprising a carriage slidably mounted to position said stylus at a plurality of different transverse positions relative to the path of movement of said record medium, means to move said carriage comprising a pivoted lever, means on one end of the lever engaging the carriage to move it in one direction and a second means on the lever resiliently engaging the carriage to bias it into engagement with the first mentioned means on the lever, operating means at the opposite end of said lever, said operating means also having locking means associated therewith comprising a spring-pressed pin and a series of cooperating depressions to maintain the pivoted lever and stylus in adjusted position.

5. In a sound reproducing and recording mechanism, the combination of a stylus and supporting head therefor for use with a record medium, a support for said head and stylus comprising a carriage slidably mounted to position said stylus at a plurality of different transverse positions relative to the path of movement of said record medium, means to move said carriage comprising a pivoted lever, one end of which is fork-like with one member of said fork resilient, said carriage having a member engaged between the members of said fork, whereby wear between the

relatively moving parts will be automatically compensated, and operating means on said lever opposite said carriage moving means.

6. In a sound reproducing and recording mechanism, the combination of a stylus and supporting head therefor, for use with a record medium; a support for said head and stylus comprising a carriage slidably mounted to position said stylus at a plurality of different transverse positions relative to the path of movement of said record medium, means to move said carriage comprising a pivoted lever, means on one end of the lever engaging the carriage to move it in one direction and a second means on the lever resiliently engaging the carriage to bias it into engagement with the first mentioned means on the lever, operating means at the opposite end of said lever, the distance between the pivot of the lever and the carriage engaging end being substantially less than the distance between the pivot and the operating end of the lever, whereby a large movement at the operating end will produce a much smaller movement at the carriage engaging end, thus permitting very fine adjustments in the movement of the carriage to be effected.

7. In a sound reproducing and recording mechanism, the combination of a stylus and supporting head therefor for use with a record medium, a support for said head and stylus comprising a base plate and a carriage slidably supported thereon to position said stylus at a plurality of different transverse positions relative to the path of movement of said record medium, a bearing arranged on said base plate with the bearing aperture extending therethrough, means to move said carriage comprising a lever mounted in said bearing, said lever having one end projecting from one side of said bearing and arranged on one side of said base plate to operatively engage said carriage, the opposite end of said lever extending from said bearing and arranged on the opposite side of said base plate from the first end of the lever, the latter end of the lever having operating means whereby the carriage may be moved to different adjusted positions.

8. In a sound reproducing and recording mechanism, the combination of a stylus and supporting head therefor for use with a record medium, a support for said head and stylus comprising a base plate and a carriage slidably supported thereon to position said stylus at a plurality of different transverse positions relative to the path of movement of said record medium, a bearing arranged on said base plate with the bearing aperture extending therethrough, means to move said carriage comprising a lever pivoted in said bearing, means on one end of the lever disposed on one side of said base plate and engaging the carriage to move it in one direction and a second means on the lever resiliently engaging the carriage to bias it into engagement with the first mentioned means on the lever, the opposite end of said lever extending from said bearing and arranged on the opposite side of said base plate from the first end of the lever, the latter end of the lever having operating means whereby the carriage may be moved to different adjusted positions.

FERDINAND VON MADALER.
WILLIAM L. WOOLF.