May 8, 1951 G. M. PIERCE 2,552,112

SHADOW BOX DEVICE FOR TRAVELING LETTER SIGNS

Filed June 2, 1947

2 Sheets-Sheet 1

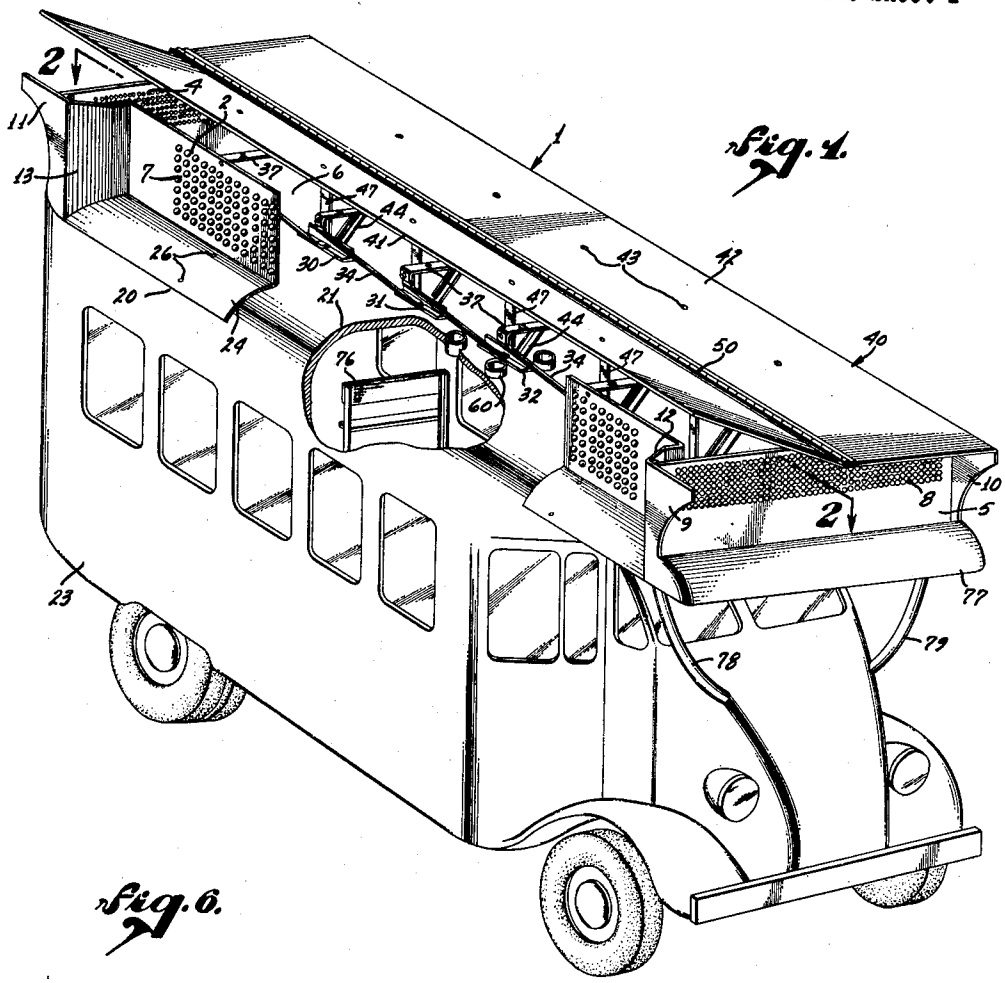

Fig. 1.

Fig. 6.

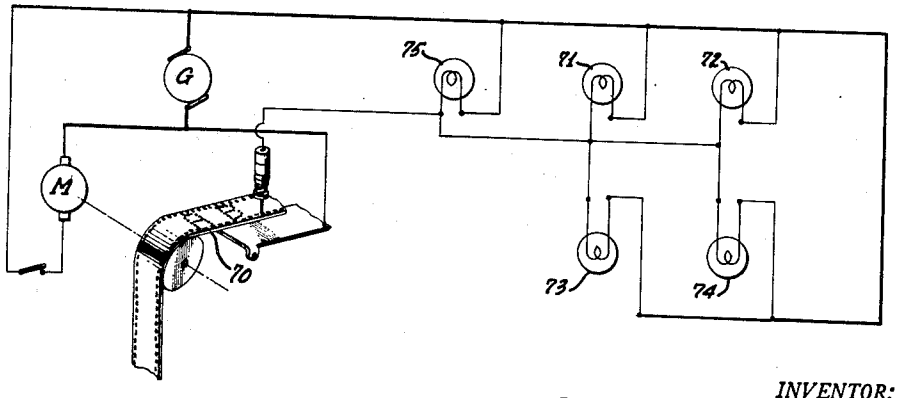

INVENTOR:
GEORGE MC GUIRE PIERCE
BY
W. C. Bentley
ATTORNEY.

May 8, 1951 G. M. PIERCE 2,552,112

SHADOW BOX DEVICE FOR TRAVELING LETTER SIGNS

Filed June 2, 1947

2 Sheets-Sheet 2

Fig. 2.

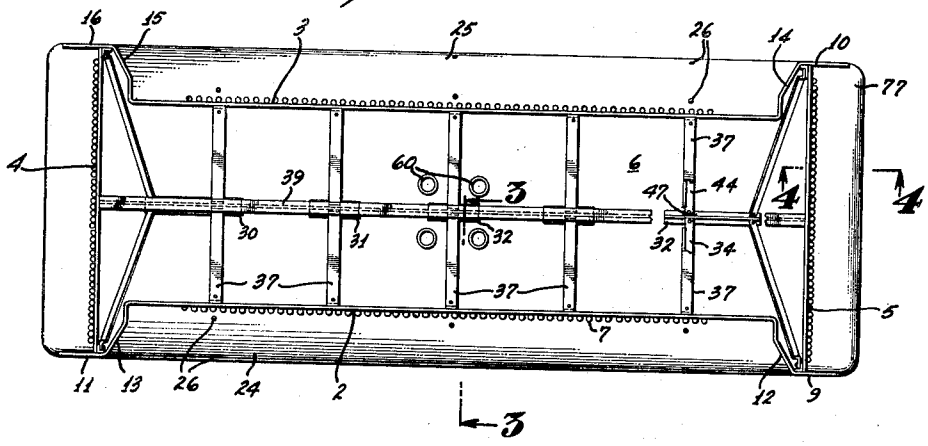

Fig. 3.

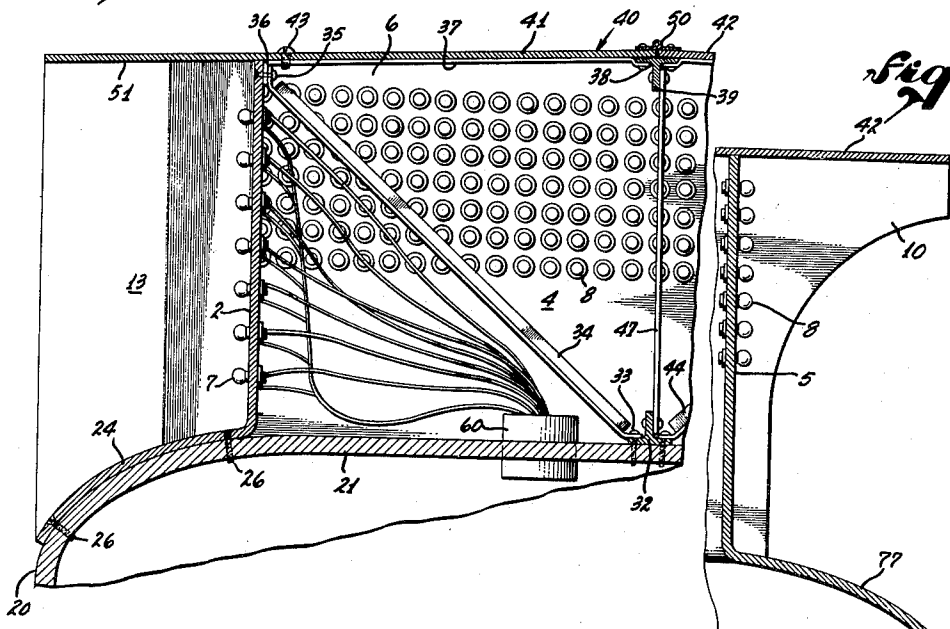

Fig. 4.

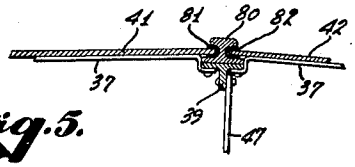

Fig. 5.

INVENTOR:
GEORGE MC GUIRE PIERCE
BY
W. C. Beatty
ATTORNEY.

Patented May 8, 1951

2,552,112

UNITED STATES PATENT OFFICE

2,552,112

SHADOW BOX DEVICE FOR TRAVELING LETTER SIGNS

George M. Pierce, Los Angeles, Calif.

Application June 2, 1947, Serial No. 751,822

3 Claims. (Cl. 40—129)

1

The invention relates to a shadow box device for a traveling letter sign wherein a co-ordinate array of electric lamps are energized by a perforated tape, whereby the message travels across the sign.

An object of the invention is to prevent the sunshine or daylight from rendering the illuminated message obscure. This is accomplished by providing a shadow box for the sign, wherein the sign forms the rear wall of the shadow box.

Another object of the invention is to provide a shadow box device for a plurality of such signs arranged to form an enclosure whereby one or another of such signs may be viewed from any position around the signs.

A further object of the invention is to provide a plurality of such signs, in a unit suitable for mounting on the top of a vehicle such as a bus. In that case, a more specific object of the invention is to provide an arrangement of signs which take full advantage of the width of the bus while conforming to the requirements of the vehicle code. Preferably four such signs are employed, one at each side and one at each end of the bus, with each end sign extending the maximum allowable width of the bus and with the side signs set back from the maximum width, whereby a cover may be provided to overhang all four of the signs, and fit light shields at the ends of the end signs, with the space between the signs forming an enclosure for the wiring for the lamps. The same message may appear on all four signs or a given message may appear on less than the whole number, and a different message may appear on the others. The wiring for the lamps is preferably led through an outlet in the roof of the bus to the body of the vehicle where an operator may monitor and control the operation of the signs.

For further details of the invention, reference may be made to the drawings wherein—

Fig. 1 is a perspective view partly in section and with parts broken away, of a shadow box device according to the present invention as applied to the roof of a bus, one part of the cover being shown open.

Fig. 2 is a top plan view with the cover removed, looking in the direction of the arrows 2—2, in Fig. 1.

Fig. 3 is an enlarged sectional view on line 3—3 of Fig. 2, looking in the direction of the arrows, with parts broken away.

Fig. 4 is an enlarged sectional view on line 4—4 of Fig. 2, looking in the direction of the arrows.

Fig. 5 is a vertical sectional view through the ridge of the cover showing a modified form of cover support.

2

Fig. 6 is a schematic wiring diagram of the tape control for the lamps.

Referring in detail to the drawings, the shadow box device 1 comprises a rectangular array of four upright signs of which the similar signs 2 and 3 are arranged at opposite sides and the similar signs 4 and 5 are arranged at the opposite ends. These signs form an enclosure 6. Each sign has a coordinate array of electric lamps similar to the array indicated at 7 for sign 2 and at 8 for sign 5. For example, seven lamps are shown for each vertical row, and the lamps 8 for the end signs 4 and 5 are spaced closer than the lamps 7 for the side signs 2, 3.

The end signs 4 and 5 are parallel and extend the maximum allowable width of the bus. Sign 5 has a vertical light shield 9 and 10 at its opposite ends, these shields extending outwardly away from the front of the end sign and lengthwise of the side signs 2 and 3. The end sign 4 has similar vertical light shields at its ends, one of them being illustrated at 11 in Fig. 1 and a similar one 16 at its other end as indicated in Fig. 2. The shield 9 may form an extension of a cornice piece 12 of the sign 2, these parts preferably being of sheet metal, and a similar cornice 13 is arranged between the other end of sign 2 and the sign 4, the shield 11 and cornice 13 also forming an extension of the sign 2. The sign 3 at the other side has a similar cornice 14 which is extended to form the light shield 10, and the cornice 15 is extended to form the light shield 16.

As shown in Figs. 1 and 3, the sign 2 is set in from the edge 20 of the roof 21 of a bus 23 and the sign 2 has a base or footpiece 24 which is curved to conform to the curvature of the roof 21. As shown in Fig. 3, the base 24 may form a continuation of the upright sign 2 and these parts as well as the shields 9 and 11 and the cornices 12 and 13 may be bent to the shape shown, from sheet metal.

The sign 3 at the other side is similar to sign 2 and has a base 25, as shown in Fig. 2. The bases 24 and 25 are suitably secured to the top of the bus by means such as screws 26, as shown in Fig. 3.

As shown in Fig. 1, at spaced intervals along the center line of the top of the bus are suitably secured to the roof 21, a number of pedestals in the form of short sections of angle iron like those indicated at 30, 31, 32. By using spaced pedestals, the lengthwise curvature of the roof is taken into account. A suitable number of pedestals such as indicated at 30 to 32 is employed, five being illustrated by way of example. One of these pedestals 32 is shown in Fig. 3 as having a bolt 33 for securing the lower end of a

cross brace 34 and for securing the pedestal 32 to the roof 21. The upper end of the cross brace 34 is connected to the upper end of sign 2 by a bolt 35 and this bolt may also hold the bent over end 36 of a rafter 37, of strap iron. The other end of rafter 37 is secured by a screw 38 to the base of a T angle iron 39 which serves as a ridgepiece for a cover 40. The ridgepiece 39 is supported by a plurality of posts like 47, each post arising from one of the pedestals like 32. A cross brace like 34 is secured to each of the pedestals like 32, to cross brace the sign 2 and similar cross braces as indicated at 44 are provided to cross brace the other side sign 3.

The cover 40 is preferably made in two sections 41, 42 and as indicated in Figs. 1 to 3, with a hinge 50 at its longitudinal center. Each section 41, 42 is secured in position by screws like 43 which are threaded into a rafter like 37.

The cover 40 covers over the enclosure 6 and fits the top of all four of the signs 2 to 5 and fits the top of all four of the light shields 9, 10, 11, 16. As shown in Fig. 3, the cover 40 slopes in opposite directions from the hinge 50, to shed rain. Also, the cover section 41 overhangs the sign 2 as indicated at 51, it overhangs sign 5 as indicated at 52 in Fig. 1 and it overhangs the sign 4 as indicated at 53. The other cover section 42 similarly overhangs signs 3, 4, and 5. The cover 40 forms the top of four shadow boxes, one for each sign. The cover 40 and the light shields 9 and 10 form one shadow box to shade the sign 5 and the sign 4 is similarly shaded, their lamps 8 being arranged at the upper portion of the signs as shown in Fig. 4. The sign 2 is shaded by a third shadow box comprising the cover section 41 and the cornices 12, 13. Sign 3 is similarly shaded. This shadow box device reduces the tendency of the sunlight or the daylight to obscure the illuminated signs, 2 to 5.

The wiring for the signs 2, 5 may be led from the back of these signs and from the enclosure 6 through an outlet like 60 for each sign, these outlets leading into the interior of the bus where the wiring is connected to suitable perforated tape apparatus indicated at 70 in Fig. 6, for producing a traveling message on the lamps of the signs. As indicated in Fig. 6, the four lamps 71 to 74 represent the corresponding lamps on the four signs 2 to 5, while the lamp 75 represents a corresponding lamp on the monitor sign 76 inside of the bus. The operator may, therefore, remain inside the bus and view the sign being spelled out on the monitor sign 76 to see that the tape apparatus 70 is functioning properly.

As shown in Fig. 1, the shadow box device has a length to overhang the front of the bus, this overhang indicated at 77 being supported by suitable braces 78, 79 which may be omitted if desired.

It is understood that the bus 23 is not used for its usual purpose of transporting passengers, but simply as a vehicle to support the signs and, of course, transport the operator of the bus and an operator for the tape apparatus 70. The shadow box device of this invention may be mounted on a stationary support such as a building or it may be mounted on other types of vehicles, such as trailers, boats, airplanes or the like.

In the modifications shown in Fig. 5, instead of connecting the cover sections 41, 42 by a hinge, their inner edges may engage in the grooves of a T rail 80 suitably secured on top of the ridgepiece 39, a rubber gasket indicated at 81 and 82 being employed along the inner edge of each cover section to seal against rain. The cover sections 41 and 42 are individually removable and are slid into or out of position, each being held in position by bolts like 43 as previously described.

The signs 2 to 5 are preferably straight in a lengthwise direction and while they are indicated as forming a rectangular enclosure 6, other geometrical forms may be employed.

Various other modifications may be made in the invention.

The shadow box design disclosed herein is disclosed and claimed in Des. Patent 152,433, dated January 18, 1949, for Traveling Letter Sign for Vehicles. The control apparatus disclosed herein is disclosed in further detail and claimed in co-pending application S. N. 753,504, filed June 9, 1947, now Patent No. 2,526,829, issued June 9, 1947, for Control Apparatus for Traveling Letter Sign.

I claim:

1. A shadow box device for traveling letter signs, said shadow box device comprising a substantially rectangular arrangement of upright signs forming an enclosure, each of said signs having electric lamp means forming a message, circuit wiring in said enclosure for said lamp means, two of said signs comprising substantially parallel and comparatively long signs at the side of the enclosure, and the other two of said signs comprising comparatively short signs at the ends of said enclosure, the distance between said side signs being less than the length of said end signs and the opposite ends of said end signs extending beyond the front of said side signs, an outwardly extending light shield at the end of each of said end signs for shading said end signs, and a cover fitting over said light shields and having a width to overhang both of said side signs, said cover having a length to overhang both of said end signs and cover said enclosure.

2. A shadow box device for traveling letter signs, said device comprising a plurality of upright signs forming an enclosure, a light shield extending outwardly beyond the front of each end of each of said signs and a cover over said enclosure, said cover fitting on the top of all of said light shields and overhanging all of said signs.

3. An illuminated sign comprising a plurality of upright traveling letter signs two of which are arranged substantially at right angles to each other, one end of one of said signs projecting outwardly beyond the front end of the other sign in position to serve as a light shield for the side of said other sign, and another light shield member projecting outwardly beyond the front of said signs at the top thereof to shield said signs from sun or daylight.

GEORGE M. PIERCE.

REFERENCES CITED

The following references are of record in the file of this patent:

UNITED STATES PATENTS

Number	Name	Date
1,728,610	Horton	Sept. 17, 1929
1,768,672	Diffin	July 1, 1930
1,886,341	Kirk	Nov. 1, 1932
1,973,276	Bard	Sept. 11, 1934
2,270,377	McLauchlin	Jan. 20, 1942