Jan. 8, 1935. F. W. CATTANACH 1,987,051

HEAT EXCHANGE APPARATUS

Filed Sept. 8, 1933

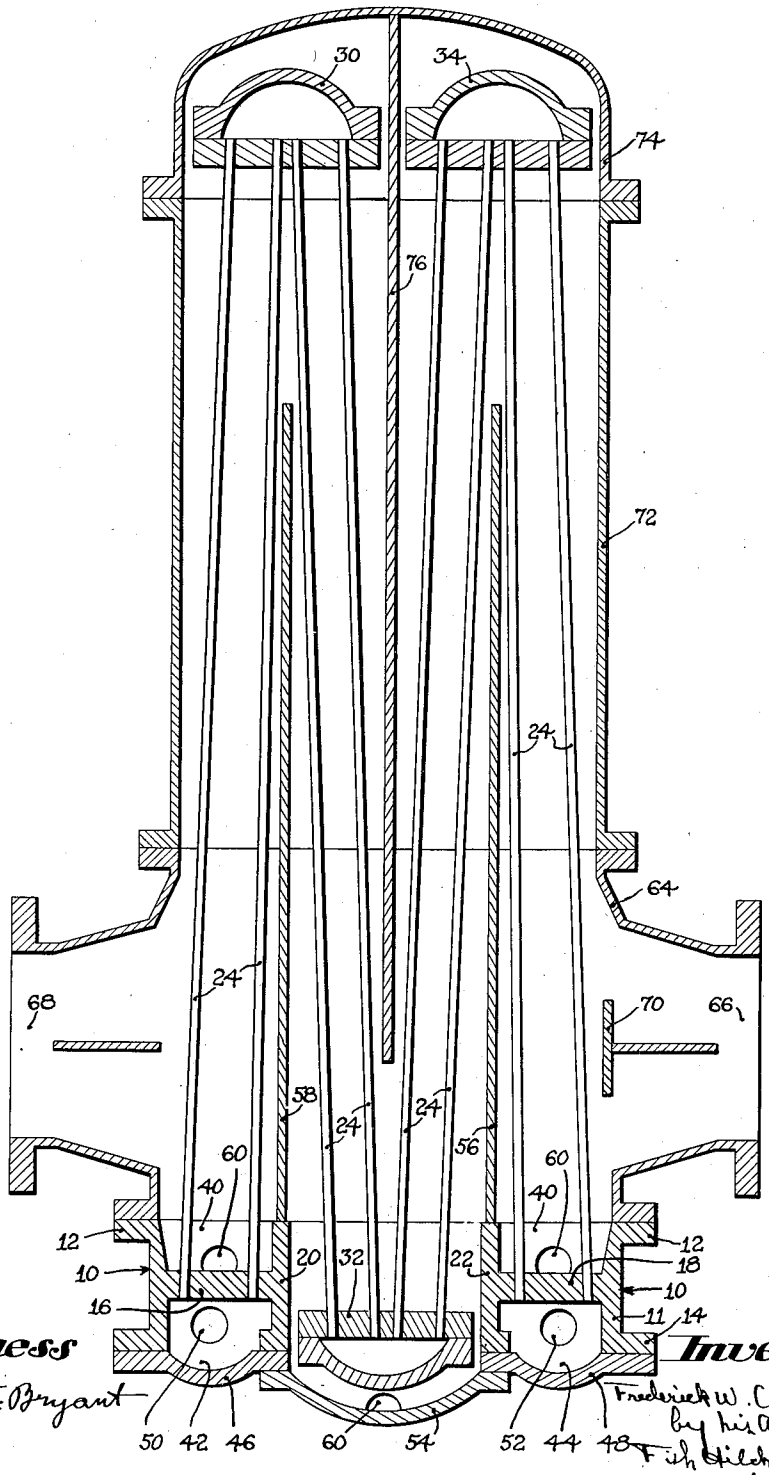

Witness

Paul F. Bryant

Inventor

Frederick W. Cattanach
by his Attorneys
Fish Richardson & Neave

Patented Jan. 8, 1935 1,987,051

UNITED STATES PATENT OFFICE

1,987,051

HEAT EXCHANGE APPARATUS

Frederick W. Cattanach, Cranford, N. J., assignor to C. H. Leach Company, New York, N. Y., a corporation of New Jersey

Application September 8, 1933, Serial No. 688,557

2 Claims. (Cl. 257—223)

The present invention relates to heat exchange apparatus, and is more particularly adapted for the cooling and condensation of hot oil vapor through contact with banks of heat exchange tubing.

The purpose of the invention is to provide a simplified and efficient form of exchanger for this purpose, which readily permits replacement of tubes and is intended to avoid undue strain upon the tubes or supporting heads during the operation of the unit. In addition, the exchanger, by virtue of its design, facilitates contact between the vapor and the tubes, and the collection of the condensate resulting from vapor cooling.

With these and other objects in view, the various features of the invention consist in certain novel features of construction, combinations and arrangements of parts hereinafter described and claimed, the advantages of which will be obvious to those skilled in the art from the following description.

The accompanying drawing illustrates a section in elevation of a heat exchanger embodying the features of the invention.

The illustrated embodiment of the invention in its general construction and arrangement is of conventional form, having a series of lengths of heat exchange tubing projecting from a support, with the intertubular space completely surrounded by a shell closure and with appropriate means for the entrance and exit of vapor to the intertubular space within the shell closure. The interiors of the tubes are in communication with one or more liquid passages provided by the tube support and sealed by the tube support from the intertubular space.

Referring particularly to the drawing, the tube support is indicated generally at 10, and is preferably of square or rectangular contour. This may be made as a casting, forging or equivalent construction which serves the purpose. The tube support is provided with an outer wall 11, having an upper bolting flange 12 and a lower bolting flange 14. It is also provided with what may be termed a tube sheet and partition 16, and a second partition and tube sheet 18. Each of these partitions extends between the outer wall 11 and intermediate walls 20 and 22. The lower ends of the heat exchange tubes 24 are fixedly secured in the tube sheets and extend upwardly therefrom, as indicated.

The bank of tubes at the left supported from the partition 16 are connected to a floating head or return header 30, which is provided with a second length of tubing connected to a lower return header 32. This in turn is connected through a tube run with a return header 34, which connects with the length of tubing fixedly secured to the partition 18. Obviously the number of return lengths with connected return headers may be varied as desired, and equally obviously the size and shape of the return headers may be modified or altered if so desired, individual lengths of tubing being directly connected by return bends or headers rather than connecting each bank or group of tubes into a single header. By virtue of this construction virtually a continuous series of tubes connected by returns are provided with the complete assembly supported at the lower end by the fixed partition.

Each of the inner partition members 20 and 22 extends above the level of the partitions 16 and 18 to provide basins 40 for the collection of condensate. The unitary support 10 is also provided on the opposite side of the partitions with liquid cooling passages 42 and 44, which are closed by detachable cover members 46 and 48. Cooling fluid flow is normally directed into the passage 42 through the opening 50, and after passing through successive tube lengths is delivered to the passage 44 and thence outwardly through the opening 52. The condensate chamber formed between the intermediate partitions 20 and 22 is closed by a detachable cover member 54, as indicated. Each condensate chamber is in free communication with a separate vapor pass formed by vertical partitions 56 and 58, which extend upwardly from the members 20 and 22. Draining of condensate from the chambers is accomplished by condensate drains 60.

It will be evident that if the head 10 is square or generally rectangular in its outline, the partitions 20 and 22 are straight and extend completely thereacross, separating the basins 40 from one another and from the intermediate basin. In a like manner, the liquid chambers 42 and 44 are located at opposite sides of the head and formed as elongated chambers or passages, closed by separate cover members 46 and 48.

If so desired, the head may be of circular formation, although this is not as desirable with the present construction as a contour of rectangular outline.

Supported above the unitary tube supporting and partition member is a nozzle annulus 64, detachably connected to the bolting flange 12 and provided with an inlet nozzle 66 and an outlet nozzle 68, both of the flaring type to avoid con-

striction of vapor path in the region of the tubes. The inlet nozzle is also provided with a target 70, properly arranged to avoid direct impingement of incoming vapor on adjacent tube surfaces. The nozzle annulus is surmounted in turn by a shell closure 72, detachably connected with the annulus and having a bonnet or cap 74 closing the upper portion. The bonnet or cap may be detachably or permanently connected to the shell closure, as desired. Preferably the action of the vapor baffles or partitions 56 and 58 is complemented by a third baffle 76 intermediate the two baffles, and providing for a tortuous vapor flow with a series of vapor passes.

Obviously the drawing on which the present disclosure is made is somewhat diagrammatic, and does not illustrate bolting connections and similar mechanical appurtenances. However, the invention is concerned primarily with the arrangement and supporting of the tube lengths, and the formation of the liquid passes in communication with the interior of the tubes but sealed from the intertubular space. It will be evident that with this construction the tube support, instead of comprising a continuous and uninterrupted transverse partition extending completely across the exchanger, consists of two transverse partitions interrupted centrally and virtually providing two shelves upon which the tube lengths are supported, the partitions serving to seal off liquid passages in the same manner as a continuous partition, or in other words, the combination of the partitions 16 and 18 and the connecting vertical partitions 20 and 22 forms an irregular tube-supporting partition with a depressed central portion to provide therein a condensate basin and space for a return header. This is in effect the equivalent of a continuous partition with liquid passages upon opposite sides. By virtue of this construction the liquid passages are sealed from the intertubular space as effectively as with a continuous transverse partition, and provision is made for additional tube lengths extending into the depressed central basin. Furthermore, the lower ends of the tubes at the fixed partitions are rolled in place, and tube replacement is readily accomplished by removing the cover plates to expose the lower tube ends and permit of rolling in new tubes.

What is claimed is:

1. Heat exchange apparatus comprising a tube supporting member, a series of lengths of heat exchange tubing connected to and supported by the member at opposite ends, liquid passages formed in the member and communicating with the interior of the tubing, a shell surrounding the exterior of the tubing, a vapor nozzle communicating with the interior of the shell, and a collection space formed centrally in the supporting member below the tubing and intermediate the tube supports.

2. Heat exchange apparatus comprising a supporting member having tube supporting portions on opposite sides of a depressed central space, heat exchange tubing connected to the portions and having a plurality of reverse bends supported from the fixed portions, liquid passages formed in the support communicating with the interior of the tubes at opposite sides of the depressed central space, means for closing the central space to provide for condensate collection, and vapor inlet and outlet nozzles communicating with the space surrounding the tube exterior above the support.

FREDERICK W. CATTANACH.