(12) INTERNATIONAL APPLICATION PUBLISHED UNDER THE PATENT COOPERATION TREATY (PCT)

(19) World Intellectual Property Organization
International Bureau

(43) International Publication Date
17 December 2020 (17.12.2020)

WIPO | PCT

(10) International Publication Number
WO 2020/249261 A1

(51) International Patent Classification:
C21B 13/12 (2006.01) *C21C 5/52* (2006.01)
C21C 5/00 (2006.01)

(21) International Application Number:
PCT/EP2020/025272

(22) International Filing Date:
10 June 2020 (10.06.2020)

(25) Filing Language: English

(26) Publication Language: English

(30) Priority Data:
19020375.2 12 June 2019 (12.06.2019) EP

(71) Applicant: **LINDE GMBH** [DE/DE]; Dr.-Carl-von-Linde-Straße 6-14, 82049 Pullach (DE).

(72) Inventor: **KWASCHNY, Pascal**; Fischmarkt 17, 22767 Hamburg, Germany (DE).

(74) Agent: **GELLNER, Bernd**; LINDE AG, Technology & Innovation Corporate, Intellectual Property, Dr.-Carl-von-Linde-Str. 6-14, 82049 Pullach (DE).

(81) Designated States *(unless otherwise indicated, for every kind of national protection available)*: AE, AG, AL, AM, AO, AT, AU, AZ, BA, BB, BG, BH, BN, BR, BW, BY, BZ, CA, CH, CL, CN, CO, CR, CU, CZ, DE, DJ, DK, DM, DO, DZ, EC, EE, EG, ES, FI, GB, GD, GE, GH, GM, GT, HN, HR, HU, ID, IL, IN, IR, IS, JO, JP, KE, KG, KH, KN, KP, KR, KW, KZ, LA, LC, LK, LR, LS, LU, LY, MA, MD, ME, MG, MK, MN, MW, MX, MY, MZ, NA, NG, NI, NO, NZ, OM, PA, PE, PG, PH, PL, PT, QA, RO, RS, RU, RW, SA, SC, SD, SE, SG, SK, SL, ST, SV, SY, TH, TJ, TM, TN, TR, TT, TZ, UA, UG, US, UZ, VC, VN, WS, ZA, ZM, ZW.

(84) Designated States *(unless otherwise indicated, for every kind of regional protection available)*: ARIPO (BW, GH, GM, KE, LR, LS, MW, MZ, NA, RW, SD, SL, ST, SZ, TZ, UG, ZM, ZW), Eurasian (AM, AZ, BY, KG, KZ, RU, TJ, TM), European (AL, AT, BE, BG, CH, CY, CZ, DE, DK, EE, ES, FI, FR, GB, GR, HR, HU, IE, IS, IT, LT, LU, LV, MC, MK, MT, NL, NO, PL, PT, RO, RS, SE, SI, SK, SM, TR), OAPI (BF, BJ, CF, CG, CI, CM, GA, GN, GQ, GW, KM, ML, MR, NE, SN, TD, TG).

Published:
— *with international search report (Art. 21(3))*

(54) **Title:** METHOD FOR OPERATING AN ELECTRIC ARC FURNACE

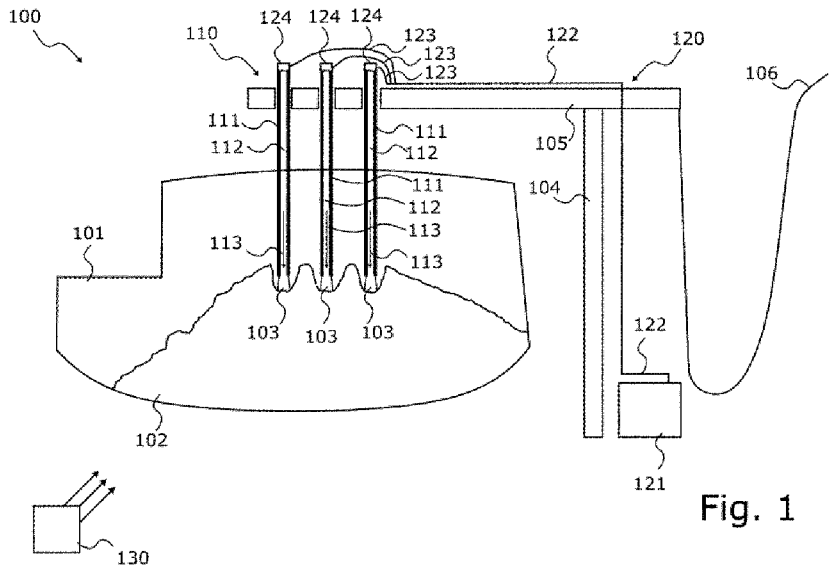

Fig. 1

(57) **Abstract:** The present invention relates to a method for operating an electric arc furnace (100), wherein an argon rich gas (133) is injected into the furnace (100) and wherein an electrode unit (110) comprising at least one electrode (111) of the furnace (100) is energised such that at least one electric arc (103) is generated.

WO 2020/249261 A1

Description

Method for operating an electric arc furnace

The present invention relates to a method for operating an electric arc furnace as well as to an electric arc furnace and to an electrode for an electric arc furnace.

Background of the invention

Electric arc furnaces are used in metallurgy for processing, particularly melting of metallic material like metal scrap or direct reduced iron (DRI, also referred to as sponge iron). An electrode of the electric arc furnace is usually made of graphite and is energised in order to produce an electric arc between the electrode and the metallic material. The electric arc furnace can comprise e.g. one electrode of that kind if direct current is used or three electrodes if alternating current is used.

In order to make electrically non-conducting air inside the furnace conducting, the molecular nitrogen N_2 of the air is usually dissociated into atomic nitrogen N, which is then ionised. By means of this conducting plasma the electric arc can be generated and can reach temperatures up to several thousand Kelvin such that the metallic material can be melted.

In a melting phase most of the metallic material inside the furnace is still in a solid state. In the course of this melting phase the electric arc drills holes into the solid metallic material. The electric arc can thus also melt material at the bottom of these holes and the radiation of the arc can also melt material at the sides of these holes. Thus, maximum energy yield and little losses of energy can be achieved. Once the metallic material is completely melted a flat bath is reached. In the course of a flat bath phase the electric arc is surrounded by a foaming slag in order to minimise energy losses. In the case of stainless steel, a foam slag is not used due to the required chemical analysis.

Operation of an electric arc furnace of that kind can involve high costs. With rising and varying energy prices, the costs for energising the electrodes can be a significant factor of the economic efficiency of the furnace. Further, wear of the graphite electrodes can

also yield high costs and can make it necessary that the electrodes have to be replaced in certain intervals. Wear of the graphite electrodes usually comprises sublimation at the tip of the electrode and burn-off at its sides due to oxidation.

It is desirable to improve operation of an electric furnace, particularly to reduce the costs of the operation.

Disclosure of the invention

According to the invention, a method for operating an electric arc furnace as well as an electric arc furnace and an electrode for an electric arc furnace with the features of the independent claims are proposed. Advantageous further developments form the subject matter of the dependent claims and of the subsequent description.

The electric arc furnace can particularly be used to process a metallic material, especially to melt a metallic material, e.g. metal scrap or direct reduced iron or sponge iron. Metallic material to be processed is particularly loaded into the furnace.

In the course of the present method, an argon rich gas is injected into the furnace, particularly a specific amount of the argon comprising gas. The term "argon rich gas" is particularly to be understood as a gas or a mixture of gases, wherein an amount of argon is larger than the amount of any other gas. In particular, the amount of argon in the argon rich gas is at least 50%, particularly at least 75%, more particularly at least 90%, more particularly at least 95%.

An electrode unit comprising at least one electrode of the furnace is energised such that at least one electric arc is generated, particularly between the at least one electrode and the metal material to be processed. For this purpose, the at least one electrode is expediently connected with a corresponding energy supply, e.g. by means of a transformer, a high current cable, etc. The at least one electrode is particularly made of graphite of a graphite material.

In correspondence with the present method, an electric arc furnace according to the present invention comprises an injection unit configured to inject an argon rich gas into the furnace and an electrode unit with at least one electrode configured to be energised

such that at least one electric arc is generated. Advantageous and preferred embodiments of the method and the electric arc furnace according to the present invention shall arise from the present description in analogous manner.

By injecting the argon rich gas into the furnace according to the present invention operation of the electric arc furnace can significantly be improved and costs can particularly be reduced, as will be explained hereafter.

In common electric arc furnaces, first of all, the electrically non-conducting air inside the furnace has to be made conducting in order to generate an electric arc. For this purpose, molecular nitrogen N_2 is dissociated into atomic nitrogen N, a reaction for which 9.8eV of energy is needed per nitrogen molecule. The atomic nitrogen N is then ionised, for which 14.5eV of energy per nitrogen atom is necessary. Thus, per nitrogen molecule at least 24.3eV are necessary to create an electrically conducting plasma.

In contrast to nitrogen, argon is a one atomic gas, i.e. argon does not have to be dissociated. Thus, atomic argon only has to be ionised in order to create a conducting plasma. 15.8eV of energy are necessary to ionise one argon atom, i.e. only 65% of the energy in case of using nitrogen (N_2).

According to the invention an argon rich gas is injected into the furnace through a bore inside the at least one electrode. It has been found that the amount of argon rich gas to be injected into the furnace depends on the size of the electrode. Therefore, the diameter of the bore has to be less than 10% of the diameter of the electrode. Such dimensioning helps to achieve the required gas amounts and gas velocities.

For a non-circular cross section of the electrode or of the bore, the term "diameter" shall mean the diameter of a circle which has the same size as the non-circular cross-sectional area.

According to preferred embodiments the diameter of the bore is less than 8%, less than 6%, less than 4% or less than 2% of the diameter of the electrode.

It has been found that the diameter of the bore through the electrode should be less than 50 mm, less than 40 mm, less than 30 mm or less than 20 mm.

The invention proposes to use an electrode with a borehole and the argon rich gas is supplied via the borehole. The electrode preferably has a cylindrical shape with a longitudinal bore in the direction of its cylinder axis.

Hollow electrodes have been used in the past for supplying particulate material into an electric arc furnace. The holes in these hollow electrodes have diameters of 100 mm or more to make sure that the particulate material does not block the hole through the electrode. However, such prior art electrodes are not suitable for injecting argon rich gas according to the invention since the argon demand takes on dimensions that do not allow the economic operation of the system.

During the development of the present invention the inventors carried out tests with prior art hollow electrodes in combination with argon and lime. The results showed that, due to the size of the hole and due to argon losses, the required argon quantities were so high that the costs exceeded the benefits. Due to this fact an electrode with a small bore was proposed, which is different from the classical hollow electrode. This borehole cannot be used for the application of solids since they would block the bore. The inventive system has two major advantages: On the one hand, the argon demand is reduced due to the small borehole and the associated low argon losses and on the other hand, higher pressures can be used. At the low pressures which can be achieved with the prior art hollow electrodes the argon rich gas is diffusely distributed at the electrode tip. With the inventive system described here, the higher pressure leads to an exact supply of argon rich gas in the area where it is needed.

By injecting the argon rich gas into the furnace according to the present invention, argon expediently substitutes the air inside the furnace, especially in an area between the electrode unit and the metallic material. This area in which the electric arc is to be created is therefore enriched and particularly filled with argon. Thus, a smaller amount of energy has to be provided in order to create a plasma and thus to ignite the electric arc compared with common electric furnaces without the injection of the argon rich gas. Therefore, the electric energy necessary in order to generate and operate the electric arc and thus the costs for energising the electrode unit and for operating the furnace can be reduced.

The electrodes can therefore be energised with lower currents in order to create and operate the electric arc. Thus, wear of the electrodes, particularly sublimation at their tips can expediently be reduced. Further, by injecting the argon rich gas into the furnace, the atmosphere inside the furnace in an area surrounding the at least one electrode is expediently enriched with argon and oxygen is suppressed in this area. Therefore, wear of the electrodes particularly in the form of burn-off at their sides due to oxidation can expediently be reduced. The intervals in which the electrodes need to be replaced can therefore be increased and costs can thus be reduced.

Furthermore, electric resistance of the electric arc is reduced such that the electric arc is created more efficient and more steady, which improves the operation of the furnace and increases its productivity.

Advantageously, the argon rich gas is injected into the furnace at a location at a tip of the at least one electrode of the electrode unit. Thus, this location at which the electric arc shall be generated can be enriched or filled with argon in order to improve and simplify ignition and operation of the electric arc.

Preferably, the argon rich gas is injected into the furnace by means of the electrode unit. The injection unit is preferably at least partially integrated into the electrode unit. The electrode unit is therefore enhanced to perform a further function additionally to creating the electric arc. Further, the argon rich gas can thus be injected at the location at the tip of the at least one electrode in order to enrich or fill the area where the eclectic arc is to be generated with argon.

The argon rich gas is injected into the furnace through a bore inside the at least one electrode of the electrode unit. The bore inside the at least one electrode of the electrode unit is configured to be connected with a gas supply for supplying the argon rich gas. Therefore, no additional elements have to be arranged inside in order to inject the argon rich gas. Further, by injecting the argon rich gas by means of the electrodes itself the argon rich gas can easily be injected at the location at the tip of the electrodes.

Each electrode particularly has a cylindrical shape with the bore extending along the entire length of the electrode in axial direction. Expediently, each electrode of the

electrode unit comprises a bore of that kind. The corresponding gas supply especially comprises one ore several tanks or gas cylinders in which the argon rich gas is stored, usually under pressure (typically between 15 and 300 bar), as well as pipes from the tank(s) to the bores. These pipes can e.g. be attached to an end of the electrodes by means of covers which can expediently be connected to the electrodes. For example, the pipes can be arranged at a lift column and/or a support arm which are provided for fastening the electrodes.

The invention further relates to an electrode for an electric arc furnace of that kind, wherein the electrode is configured to be energised such that an electric arc is generated and wherein the electrode comprises a bore configured to be connected with a gas supply for supplying an argon rich gas. Advantageous and preferred embodiments of this electrode according to the present invention shall arise from the present description of the method and the electric arc furnace according to the present invention in analogous manner.

Advantageously, an amount of the argon rich gas injected into the furnace is controlled. This control can expediently be integrated into a control mechanism of the furnace and can for example be performed by a control unit for controlling operation of the furnace. Particularly, the amount of argon rich gas injected into the furnace can be controlled in order to improve the operation of the furnace and to increase its productivity.

Preferably the amount of the argon rich gas injected into the furnace is controlled in dependence of a state of the furnace and/or in dependence of a state of the at least one electric arc. The amount of argon rich gas is thus particularly controlled such that the electric arc is created and operated efficiently and steadily, thus improving the operation of the furnace and increasing its productivity. For example, if the electric arc becomes unstable, the amount of injected argon rich gas will expediently be increased to support and stabilise the electric arc, that is the electric arc is dynamically controlled.

Advantageously, the electrode unit comprises one electrode, especially when direct current is used to energise the electrode. Alternatively, the electrode unit preferably comprises three electrodes, particularly when alternating current is used to energise the electrodes, especially by means of a three-phase electric power source.

Preferably, argon is injected as the argon rich gas. In particular, argon with a purity of at least 90% is injected as the argon rich gas, particularly with a purity of at least 95%, more particularly with a purity of at least 99%. For example, argon 5.0 can be injected, i.e. argon with purity of 99.999%. Particularly, argon 6.0 can be injected with a purity of 99.9999%. Further, argon 7.0 can be injected, i.e. argon with a purity of 99.99999%.

It is however also possible to inject a mixture of gases as the argon rich gas, wherein an amount of argon in the gas mixture is at least 50 %, particularly at least 75%, more particularly at least 90%.

The argon is introduced into the furnace at a pressure of more than 8 bar and preferably at a pressure between 8 and 15 bar. Thereby, the argon is injected into the furnace with a velocity which is high enough so that the argon comes exactly to the point where it is needed to support the electric arc. The positive effect of the argon on the electric arc and on the plasma is achieved very fast and the argon losses are considerably reduced.

Further advantages and embodiments of the invention will become apparent from the description and the appended figures.

It should be noted that the previously mentioned features and the features to be further described in the following are usable not only in the respectively indicated combination, but also in further combinations or taken alone, without departing from the scope of the present invention.

In the drawings

Fig. 1 schematically shows a preferred embodiment of an electric arc furnace according to the present invention in a sectional side view and

Fig. 2 schematically shows a preferred embodiment of a method according to the present invention as a block diagram.

Detailed description of the figures

Fig. 1 schematically shows a preferred embodiment of an electric arc furnace 100 according to the present invention in a sectional side view.

The furnace 100 comprises a main body 101 in which a metallic material 102 to be processed can be loaded, e.g. metal scrap. Further, the furnace 100 comprises an electrode unit 110 with at least one electrode 111. In the present example, the electrode unit 110 comprises three electrodes 111, particularly of identical construction. A mechanical holding element is provided for holding the electrodes 111 in position comprising a lift column 104 and a support arm 105. The support arm 105 can further be used to energise the electrodes 111. For this purpose the support arm 105 can be connected with a high current cable 106. This cable 106 can be connected with further electric elements e.g. with a transformer and a power source, particularly a three-phase electric power source.

When the electrodes 111 are energised, electric arcs 103 can be created between the electrodes 111 and the metallic material 102. These electric arcs 103 can reach temperatures of several thousand Kelvin such that the metallic material 102 can be melted. Fig. 1 exemplarily shows a melting phase, during which most of the metallic material 102 is still in a solid state and in the course of which the electric arcs 103 drill holes into the solid metallic material 102.

Further, an injection unit is provided in order to inject an argon rich gas into the furnace 100. This injection unit is partially integrated into the electrode unit 110 in that each electrode 111 comprises a bore 112. Each electrode 111 has a cylindrical shape with the bore 112 extending along the entire length of the electrode 111 in axial direction. The outer diameter of each electrode is, for example, 500 mm and the diameter of each bore is 48 mm.

Each bore 112 is connected with a gas supply 120 for supplying the argon rich gas. This gas supply 120 can comprise a corresponding gas tank 121 and a common pipe 122, which can e.g. be arranged at the lift column 104 and the support arm 105. From the common pipe 122 three individual pipes 123 branch off to the three electrodes 111. Although only one tank is exemplarily shown in Fig. 1 it is to be understood that an expedient number of tanks can be provided. For example, also a bundle of gas cylinders can be provided as the gas tank 121.

Particularly, each individual pipe 123 is connected with a cover 124, which is connected to the corresponding electrode 111 such that the argon rich gas can be conducted into the bore 112 of the corresponding electrode 111, as indicated by reference sign 113.

Thus, the argon rich gas 113 is injected into the furnace 100 through the electrodes 111 itself. When ejected out of the bores 112, argon rich gas 113 is therefore injected into the furnace 100 at location at the tip of the electrodes 111.

Preferably, argon is injected as the argon rich gas 113, preferably argon with a purity of at least 99.9%, e.g. argon 7.0 with a purity of 99.99999%. Argon is therefore injected into the furnace 100 in the area between the electrodes 111 and the metallic material 102, in which the electric arcs 103 shall be created. This area is thus enriched and particularly filled with argon. When the electrodes 111 are energised the argon in this area is thus ionised and an electrically conducting plasma is created such that the electric arcs 103 can be ignited.

Since argon is a one atomic gas it does not have to be dissociated. Argon thus only has to be ionised in order to create a conducting plasma. For the ionisation of argon 15.8eV of energy are necessary. In contrast to that, in a common electric arc furnace, into which no argon is injected, molecular nitrogen N_2 of air is usually ionised in order create plasma. However, first of all the molecular nitrogen N_2 has to be dissociated into atomic nitrogen N, which is afterwards ionised. For this dissociation 9.8eV of energy is needed and for the ionisation 14.5eV of energy is needed. Thus, in a common electric arc furnace, at least 24.3eV are necessary to create an electrically conducting plasma.

Therefore, in the present electric arc furnace 100 a smaller amount of energy has to be provided in order to create plasma compared to common electric arc furnaces into which no argon is injected. Electric energy to generate and operate the electric arcs 103, costs for energising the electrodes 111 and for operating the furnace 100 are reduced compared to common electric arc furnaces.

Further, since the electrodes 111 can therefore be energised with lower currents in order to create and operate the electric arcs 103, wear of the electrodes 111,

particularly sublimation at their tips can expediently be reduced. Since the atmosphere inside the furnace 100 in an area surrounding the electrodes 111 is enriched with argon and oxygen is suppressed in this area, wear of the electrodes 111 in the form of burn-off at their sides due to oxidation can be reduced. Furthermore, since electric resistance of the electric arcs 103 is reduced the arcs 103 can be created and operated more efficient and steadier.

By means of the present invention, operation of the furnace 100 can therefore be improved, its productivity can be increased and costs can be reduced.

In order to further improve operation and productivity, the amount of the argon rich gas injected into the furnace is preferably controlled. For this purpose, a control unit 130 of the furnace is, in particular in terms of a computer program, configured to perform a preferred embodiment of a method according to the invention, which is shown in Fig. 2 as a block diagram.

In step 201 the metallic scrap is loaded into the furnace 100. In step 202, injection unit is activated and argon 113 is injected into the furnace. In step 203 the electrodes 111 are energised such that the plasma is created and that the electric arcs 103 can be ignited.

After the electric arcs 103 are generated, the amount of argon 113 injected into the furnace 100 is controlled in step 204, in particularly in dependence of a state of the furnace 100 and in dependence of a state of electric arcs 103.

For example, if the electric arcs 103 become unstable, the amount of injected argon 113 will be increased to support and stabilise the electric arcs 103. The electric arcs 103 can thus be created and operated efficiently and steadily, thus further improving the operation of the furnace 100 and increasing its productivity.

Reference list

100	electric arc furnace
101	main body of the electric arc furnace
102	metallic material, metal scrap
103	electric arc
104	lift column
105	support arm
106	high current cable
110	electrode unit
111	electrode
112	bore
113	argon rich gas
120	gas supply
121	gas tank
122	common pipe
123	individual pipe
124	cover
130	control unit
201	method step
202	method step
203	method step
204	method step

Patent Claims

1. A method for operating an electric arc furnace (100), wherein an argon rich gas (133) is injected (202) into the furnace (100) and wherein an electrode unit (110) comprising at least one electrode (111) of the furnace (100) is energised (203) such that at least one electric arc (103) is generated, wherein the argon rich gas (113) is injected into the furnace (100) through a bore (112) inside the at least one electrode (111), **characterized in that** the diameter of the bore is less than 10% of the diameter of the electrode.

2. The method according to claim 1, wherein the argon rich gas (113) is injected into the furnace (100) at a location at a tip of the at least one electrode (111).

3. The method according to any one of the preceding claims, wherein an amount of the argon rich gas (113) injected into the furnace (100) is controlled (204).

4. The method according to any one of the preceding claims, wherein the diameter of the bore is less than 8%, less than 6%, less than 4% or less than 2% of the diameter of the electrode.

5. The method according to any one of the preceding claims, wherein the diameter of the bore is less than 50mm, less than 40mm, less than 30 mm or less than 20 mm.

6. The method according to any one of the preceding claims, wherein the amount of the argon rich gas (113) injected into the furnace (100) is controlled (204) in dependence of a state of the furnace (100) and/or in dependence of a state of the at least one electric arc (103).

7. The method according to any one of the preceding claims, wherein argon is injected as the argon rich gas (113).

8. The method according to any one of the preceding claims, wherein the argon rich gas is injected at a pressure of more than 8 bar, preferably at a pressure between 8 and 15 bar.

9. An electric arc furnace (100) comprising an electrode unit (110) with at least one electrode (111) comprising a bore inside the electrode and configured to be energised such that at least one electric arc (103) is generated, wherein the electric arc furnace comprises an injection unit (112, 120), **characterized in that** the injection unit is configured to be connected with a gas supply (120) for supplying the argon rich gas (113) through the bore into the furnace (100) and wherein the diameter of the bore is less than 10% of the diameter of the electrode.

10. The electric arc furnace (100) according to claim 9, wherein the diameter of the bore is less than 50mm, less than 40mm, less than 30 mm or less than 20 mm.

11. The electric arc furnace (100) according to any one of the claims 9 or10, wherein the electrode unit (110) comprises one electrode or three electrodes (111).

12. An electrode (111) for an electric arc furnace (100) configured to be energised such that an electric arc (103) is generated, comprising a bore (112) configured to be connected with a gas supply (120) for supplying an argon rich gas**,** **characterized in that** the diameter of the bore is less than 10% of the diameter of the electrode.

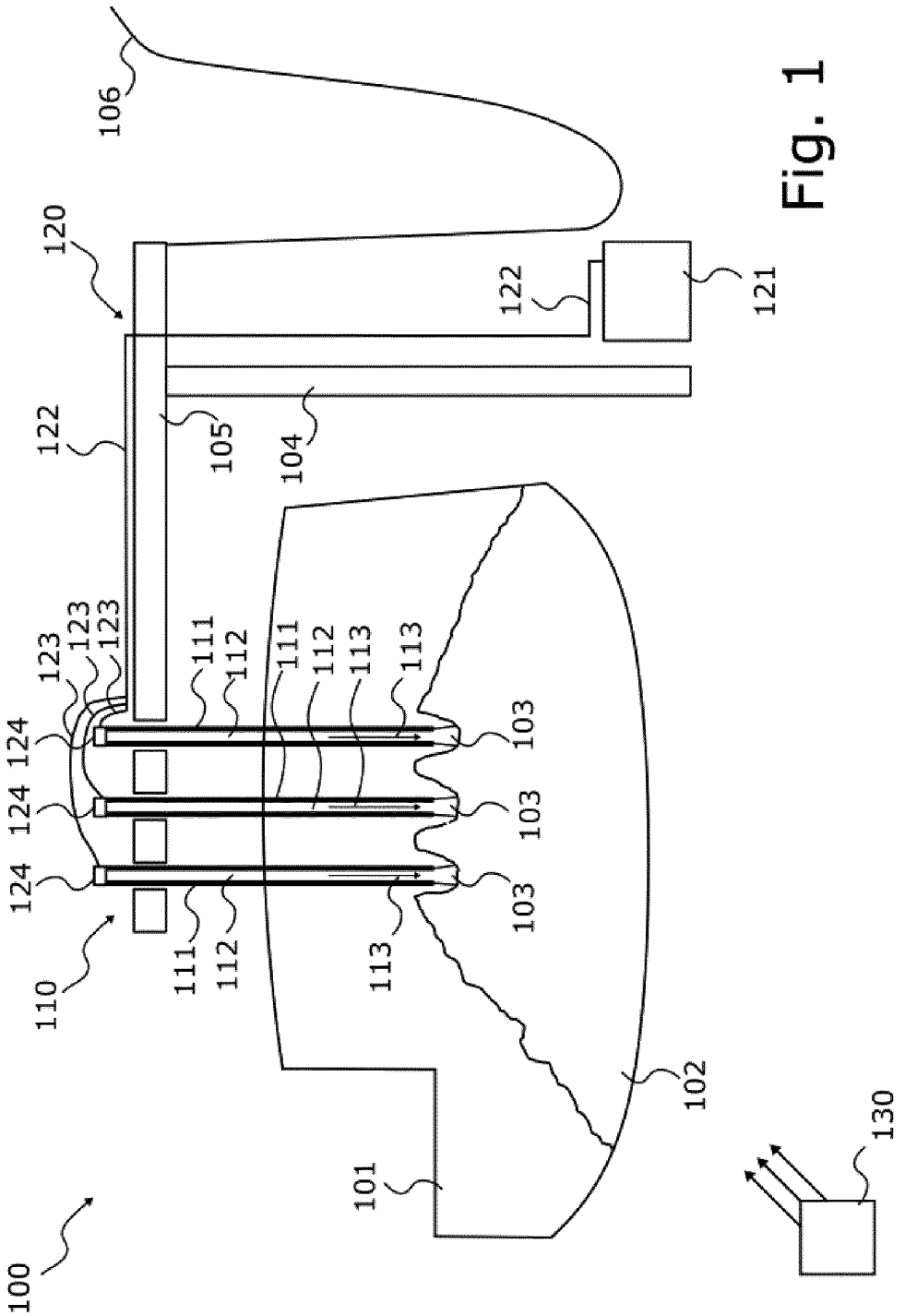
106
120
122
121
122
105
104
123
123
123
111
112
111
112
113
113
124
124
124
103
103
103
110
111
112
113
102
101
100
130

Fig. 1

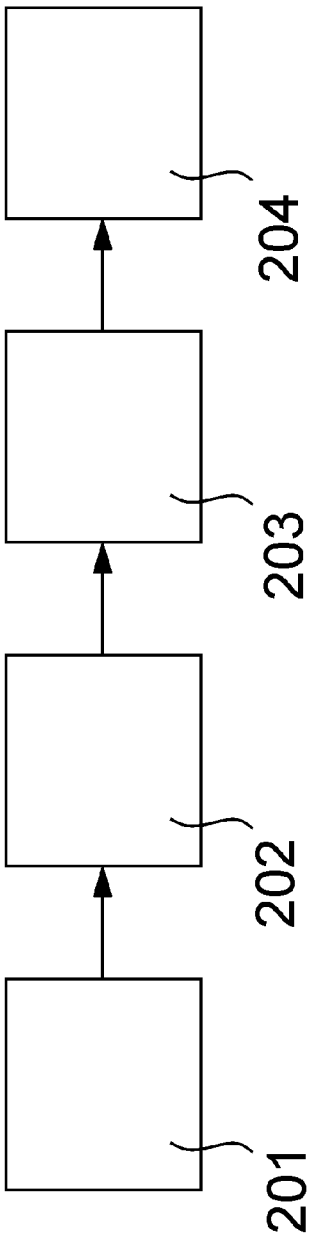

Fig. 2

INTERNATIONAL SEARCH REPORT

International application No
PCT/EP2020/025272

A. CLASSIFICATION OF SUBJECT MATTER
INV. C21B13/12 C21C5/00 C21C5/52
ADD.

According to International Patent Classification (IPC) or to both national classification and IPC

B. FIELDS SEARCHED

Minimum documentation searched (classification system followed by classification symbols)
C21B C21C

Documentation searched other than minimum documentation to the extent that such documents are included in the fields searched

Electronic data base consulted during the international search (name of data base and, where practicable, search terms used)
EPO-Internal, WPI Data

C. DOCUMENTS CONSIDERED TO BE RELEVANT

Category*	Citation of document, with indication, where appropriate, of the relevant passages	Relevant to claim No.
Y	GB 1 061 643 A (BRITISH OXYGEN CO LTD) 15 March 1967 (1967-03-15) page 1, line 9 - line 20 page 2, line 103 - page 3, line 2 figures 1-4	1-12
Y	US 2016/273062 A1 (BALDAUF MANFRED [DE] ET AL) 22 September 2016 (2016-09-22) paragraph [0008] - paragraph [0010] paragraph [0027] paragraph [0049]; figures 1-3	1-12
Y	US 2014/301423 A1 (DÖBBELER ARNO [DE] ET AL) 9 October 2014 (2014-10-09) paragraph [0013] paragraph [0020] paragraph [0024] - paragraph [0025]	1-12

-/--

[X] Further documents are listed in the continuation of Box C.

[X] See patent family annex.

* Special categories of cited documents :

"A" document defining the general state of the art which is not considered to be of particular relevance

"E" earlier application or patent but published on or after the international filing date

"L" document which may throw doubts on priority claim(s) or which is cited to establish the publication date of another citation or other special reason (as specified)

"O" document referring to an oral disclosure, use, exhibition or other means

"P" document published prior to the international filing date but later than the priority date claimed

"T" later document published after the international filing date or priority date and not in conflict with the application but cited to understand the principle or theory underlying the invention

"X" document of particular relevance; the claimed invention cannot be considered novel or cannot be considered to involve an inventive step when the document is taken alone

"Y" document of particular relevance; the claimed invention cannot be considered to involve an inventive step when the document is combined with one or more other such documents, such combination being obvious to a person skilled in the art

"&" document member of the same patent family

Date of the actual completion of the international search	Date of mailing of the international search report
13 July 2020	23/07/2020

Name and mailing address of the ISA/	Authorized officer
European Patent Office, P.B. 5818 Patentlaan 2 NL - 2280 HV Rijswijk Tel. (+31-70) 340-2040, Fax: (+31-70) 340-3016	Desvignes, Rémi

1

Form PCT/ISA/210 (second sheet) (April 2005)

C(Continuation). DOCUMENTS CONSIDERED TO BE RELEVANT

Category*	Citation of document, with indication, where appropriate, of the relevant passages	Relevant to claim No.
Y	GB 823 428 A (BRITISH OXYGEN CO LTD) 11 November 1959 (1959-11-11) page 1, line 50 - page 2, line 17 figure 1	1-12
Y	US 2 909 422 A (SCHWABE WILLIAM E) 20 October 1959 (1959-10-20) page 2, line 62 - page 3, line 66 figure 1	1-12
X	GB 1 572 248 A (TIBUR METALS LTD) 30 July 1980 (1980-07-30) page 2, line 16 - page 3, line 8 page 6, line 36 - line 54 figures 1-3	1-12
X	JP 2002 235124 A (NIPPON STEEL CORP) 23 August 2002 (2002-08-23) Machine translation; paragraph [0021] - paragraph [0022] machine translation; paragraph [0013] - paragraph [0015]	1-12
X	JP S63 203712 A (DAIDO STEEL CO LTD) 23 August 1988 (1988-08-23) Machine translation; paragraph [0001]	9-12

1

INTERNATIONAL SEARCH REPORT

Information on patent family members

International application No
PCT/EP2020/025272

Patent document cited in search report	Publication date	Patent family member(s)	Publication date
GB 1061643 A	15-03-1967	NONE	
US 2016273062 A1	22-09-2016	CN 105940765 A	14-09-2016
		DE 102013222158 A1	13-05-2015
		EP 3064036 A1	07-09-2016
		JP 6301486 B2	28-03-2018
		JP 2016540129 A	22-12-2016
		MX 359461 B	28-09-2018
		US 2016273062 A1	22-09-2016
		WO 2015062968 A1	07-05-2015
US 2014301423 A1	09-10-2014	CN 103906849 A	02-07-2014
		EP 2589672 A1	08-05-2013
		EP 2742157 A1	18-06-2014
		ES 2547923 T3	09-10-2015
		KR 20140110840 A	17-09-2014
		PL 2742157 T3	31-12-2015
		RU 2014122319 A	10-12-2015
		US 2014301423 A1	09-10-2014
		WO 2013064413 A1	10-05-2013
GB 823428 A	11-11-1959	NONE	
US 2909422 A	20-10-1959	NONE	
GB 1572248 A	30-07-1980	NONE	
JP 2002235124 A	23-08-2002	NONE	
JP S63203712 A	23-08-1988	NONE	