PCT WORLD INTELLECTUAL PROPERTY ORGANIZATION
International Bureau

INTERNATIONAL APPLICATION PUBLISHED UNDER THE PATENT COOPERATION TREATY (PCT)

(51) International Patent Classification 5 :
F04B 43/12, F04C 2/107

A1

(11) International Publication Number: WO 94/18454

(43) International Publication Date: 18 August 1994 (18.08.94)

(21) International Application Number: PCT/HU94/00004

(22) International Filing Date: 11 February 1994 (11.02.94)

(30) Priority Data:
P 93 00352 12 February 1993 (12.02.93) HU

(71) Applicant *(for all designated States except US)*: DIÓSGYŐRI SZIVATTYÚGYÁR KFT. [HU/HU]; Gyár út 19, H-3900 Szerencs (HU).

(72) Inventor; and
(75) Inventor/Applicant *(for US only)*: FERENCZY, Győző [HU/HU]; Kempelen Farkas u. 12/D, H-1124 Budapest (HU).

(74) Agent: DANUBIA; Bajcsy-Zsilinszky út 16, H-1051 Budapest (HU).

(81) Designated States: AU, BB, BG, BR, BY, CA, CN, CZ, FI, JP, KP, KR, KZ, LK, LV, MG, MN, MW, NO, NZ, PL, RO, RU, SD, SK, UA, US, UZ, VN, European patent (AT, BE, CH, DE, DK, ES, FR, GB, GR, IE, IT, LU, MC, NL, PT, SE), OAPI patent (BF, BJ, CF, CG, CI, CM, GA, GN, ML, MR, NE, SN, TD, TG).

Published
With international search report.
Before the expiration of the time limit for amending the claims and to be republished in the event of the receipt of amendments.

(54) Title: A ROTARY MACHINE FOR DELIVERING LIQUIDS OR GASES

(57) Abstract

The invention relates to a rotary machine for delivering liquids or gases, comprising a one-start or multi-start screw with a driving unit, a housing provided with suction and delivery openings and a membrane body arranged between said housing and said screw wherein, according to the invention, the housing (2) has an inner space larger than the diameter of the screw (1) and the membrane body (3) is highly deformable elongated tube-like resilient body being sealingly clamped between the housing (2) of the screw and the housing of the driving unit (10) on one end, sealingly fixed to the inner wall of the housing of the screw on one part of its outer surface and provided with a cap-like end part on the other end.

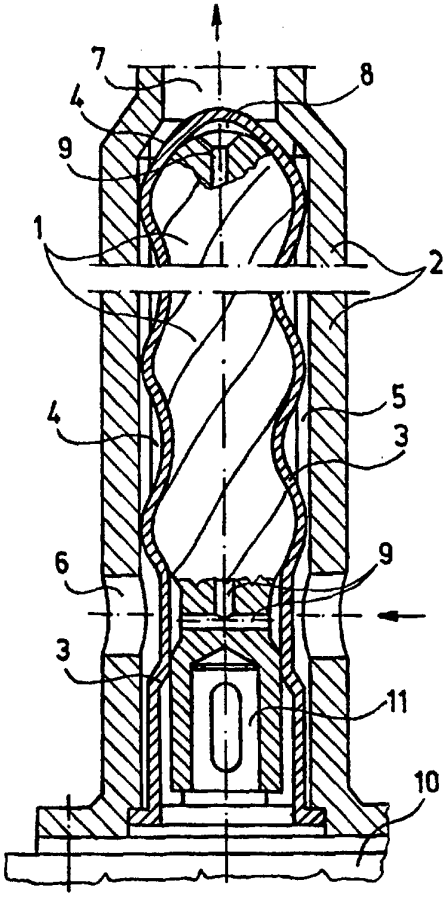

FOR THE PURPOSES OF INFORMATION ONLY

Codes used to identify States party to the PCT on the front pages of pamphlets publishing international applications under the PCT.

AT	Austria	**GB**	United Kingdom	**MR**	Mauritania
AU	Australia	**GE**	Georgia	**MW**	Malawi
BB	Barbados	**GN**	Guinea	**NE**	Niger
BE	Belgium	**GR**	Greece	**NL**	Netherlands
BF	Burkina Faso	**HU**	Hungary	**NO**	Norway
BG	Bulgaria	**IE**	Ireland	**NZ**	New Zealand
BJ	Benin	**IT**	Italy	**PL**	Poland
BR	Brazil	**JP**	Japan	**PT**	Portugal
BY	Belarus	**KE**	Kenya	**RO**	Romania
CA	Canada	**KG**	Kyrgystan	**RU**	Russian Federation
CF	Central African Republic	**KP**	Democratic People's Republic of Korea	**SD**	Sudan
CG	Congo			**SE**	Sweden
CH	Switzerland	**KR**	Republic of Korea	**SI**	Slovenia
CI	Côte d'Ivoire	**KZ**	Kazakhstan	**SK**	Slovakia
CM	Cameroon	**LI**	Liechtenstein	**SN**	Senegal
CN	China	**LK**	Sri Lanka	**TD**	Chad
CS	Czechoslovakia	**LU**	Luxembourg	**TG**	Togo
CZ	Czech Republic	**LV**	Latvia	**TJ**	Tajikistan
DE	Germany	**MC**	Monaco	**TT**	Trinidad and Tobago
DK	Denmark	**MD**	Republic of Moldova	**UA**	Ukraine
ES	Spain	**MG**	Madagascar	**US**	United States of America
FI	Finland	**ML**	Mali	**UZ**	Uzbekistan
FR	France	**MN**	Mongolia	**VN**	Viet Nam
GA	Gabon				

A ROTARY MACHINE FOR DELIVERING LIQUIDS OR GASES

The present invention relates to a rotary machine for delivering liquids or gases comprising a one-start or multi-start screw with a driving unit, a housing of said screw, provided with suction and delivery openings and a membrane body arranged between said housing and said screw. The machine according to the invention may be a pump or compressor and is very advantageous among others for pumping corrosive and erodent fluids or compressing gases.

Nowdays, turbine pump, screw pumps, piston pumps and membrane pumps are generally used for delivering fluids.

Turbine pumps have a rather high delivery and piston pumps have rather high lift. At the same time, the turbine pumps have rather low lift and the piston pumps have rather small delivery. Accordingly, neither of these pump has an advantageous performance characteristics for the practice.

On the other side, the membrane pumps have rather low lift as well as delivery and, at the same time have to be provided with rectification valves, and a mechanism for producing reciprocating motion which is rather disadvantageous with respect to the construction and the costs. Further disadvantage is the pulsating character of the delivery.

According to the above, screw pumps would be optimal for medium power and delivery requirements. This type of pumps is however rather complicated and expensive on the one hand, and has a rather high energy consumption, on the other hand. Furthermore, there are significant frictions within the pump, which would result in a relatively quick wearing.

A screw pump comprises namely a housing provided with a two-start rib spiral on the inner surface which is in moving connection with the rotating screw. These two parts are moving with respect to each other with a planetary motion which can only be solved by a very complicated construction, otherwise both parts are wearing extremely quickly, though the housing is made in this case of a very deformable material with a rather thick wall. The planetary motion together with the high and asymmetric pressure and friction necessarily result in a quick wearing.

Membrane pumps are applied rather rarely due to their low performance, pulsating delivery, complicated reciprocating parts and the valves.

Accordingly, the object of the present invention is to provide a self-priming rotary displacement machine (pump or compressor) of relatively simple construction and good performance characteristics which does not contain reciprocating parts or valves.

A further object of the invention is to minimise the friction between the elements moving with respect to each other and to avoid any planetary movement.

Still another object of the invention is to keep clear the surfaces of the elements of the physical and/or chemical influence of the fluid delivered.

Accordingly, the invention is a rotary machine for delivering liquids or gases, comprising a one-start or multi-start screw with a driving unit, a housing provided with suction and delivery openings and a membrane body arranged between said housing and said screw wherein, according to the invention, the housing has an inner space larger then the diameter of the screw and the membrane body is highly deformable elongated tubelike resilient body being sealingly clamped between the housing of the screw and the housing of the driving unit on one end, sealingly fixed to the inner wall of the housing of the screw on one part of its outer surface and provided with a cap-like end part on the other end.

The outer surface of the membrane body may be sealingly fixed to the inner wall of the housing of the screw along one or more generatrixes of the membrane body.

According to an advantageous embodiment, there are ribs along some generatrixes of the membrane body and said ribs are clamped in grooves of the housing.

The membrane body as well as the screw and the inner space of the housing may have cylindrical and/or conical shape.

The membrane body may contain a mesh of textile or other resilient filaments of stright, spiral or crimped shape. The filaments preferably extend in directions corresponding to the pitch of the screw.

The membrane body may be made of a laminate material and in given cases may have a corrugated inner and/or outer surface.

It is suggested that there is a lubricant in the spaces between the screw and the membrane body and, at the same time the screw is provided with channels for circulation of the lubricant.

The main point of the invention is therefore an improved membrane body which is arranged between the moving parts of the pump. Due to this improved membrane body, the loading of the operating parts can be reduced and the whole machine has only three relatively small parts wherein the machine is operating in a new improved way, due to the construction of the parts and to the membrane body.

The invention is based on the recognition that a screw rotating in a housing provided with an inner space larger then the diameter of the screw and a membrane body being arranged between the screw and the housing, the surface of the membrane body is carrying out a special movement producing closed chambers between the housing and the membrane body, said travelling axially chambers being able to deliver a fluid without the need of a sliding and frictioning contact or a planetary movement.

Slip is produced only between the surfaces of the screw and the inner surface of the membrane body. These surfaces can be produced as lapped faces and lubricant can be arranged between them.

Due to the above, both friction and energy consumption can be reduced considerably with respect to the usual screw pumps or compressors. Accordingly, a multiple working life can be achieved. Furthermore, both the production and the operation of the machines according to the invention are extremely efficient, meanwhile the pollution of the environment can also be reduced by applying a great number of them.

The machine, according to the invention can be used for delivering different fluids being corrosive or erodent and it can be adapted to different purposes by applying appropriate material for the parts of the machine. The machine is also suitable for being applied as a feeding pump as well as a compressor for producing pressurised air.

The machine according to the invention may be regarded as an improved screw pump or membrane pump, but it is more simple and more advantageous both in view of the operation and the construction. Though, it is a displacement pump/compressor, it is actually neither screw pump nor membrane pump.

The characteristic features of the machine are really advantageous in view of the application in the practice. These advantages are as follows:

- it is a rotary-type machine
- it is a displacement machine (the delivery is actually independent from the resistance)
- it can be applied both for gases, and fluids and is it self-priming
- it is rather small and compact
- it is consisting only of three relatively simple parts
- there is no stuffing box in the machine
- pressure and delivery are both advantageous and accordingly, it has an improved performance characteristic
- the fluid delivered is not in contact with the working surfaces,
- there is an extremely low inner friction
- it can be produced and operated cheaply and safely
- it has long working life and
- it is suitable for delivering corrosive and erodent agents.

All the above mean that the machine according to the invention is suitable for meeting a rather broad range of requirements, first of all in the small and medium delivery and pressure ranges in a way which is environment saving.

According to an advantageous embodiment, the screw may be a double start screw having a sinus or arcuate profile, which ensure a relatively low loading of the surfaces.

The screw may be produced with a diminishing pitch and may be conical (the membrane body and the housing too) which is advantageous first of all when gas is delivered against pressure.

Further details and advantages of the invention will be described by way of example and with the accompanying drawing. In the drawing

- Figure 1 is the longitudinal section of a pump according the invention and
- Figure 2 is section II-II of Figure 1.

In the pump according to the invention, screw 1 is provided with a double start outer thread having an arcuate profile. It is fixed on the shaft 11 of a driving unit 10 (which is not shown in Figure 1). When screw 1 is rotating, the membrane body 3 is forced to make an undulatory movement along the axis of the pump. Membrane body 3 is fixed in the housing 2 by ribs 4 sealingly clamped in grooves of housing 2.

Ribs 4 are parallel with the geometrical axis of the screw 1 and they are limiting the flow of the fluid in the direction perpendicular to the axis of the pump. In this way, the side surface of the membrane body 3 and the wall of the housing 2 define a number of delivery chambers 5 having a cross-section of a circular segment. These delivery chambers 5 make the fluid advancing from the suction opening 6 to the delivery opening 7.

Ribs 4 of the membrane body 3 may be sealingly fixed to the housing 2 on different ways e.g. by gluing or mechanical clamping.

The space 8 between the screw 1 and the membrane body 3 is filled with lubricant which can circulate through channels 9 in the screw body.

The membrane body 3 is clamped between the housing 2 of the screw and that of the driving unit 10. On the other side, the membrane body 3 has a closed cap-like end.

The membrane body 3 can be made of a highly deformable polyurethane of cross-linked structure which has a rather high strength, meanwhile the screw 1 is generally steel. The surfaces being in contact with each other should be lapped.

In order to strengthen the material of the membrane body, resilient single filaments of a mesh of textile filaments may be arranged in the wall of the membrane body. The filaments may be of stright, spiral or crimped shape and make the wall of the

membrane body more resistant to the load. In some cases it may be advantageous to make the membrane body of laminate material.

An advantageous arrangement of the filaments in the membrane body is in directions corresponding to the pitch of the screw.

In order to improve the operation of the pump, it is suggested to make the membrane body with an inner and/or outer surface which is corrugated.
The housing 2 of the screw 1 may also be made of polyurethane which is hard and rigid enough for the purpose.

Due to the finished surfaces and the lubricant between them, a liquid friction ensures a considerable reduction of the friction losses.

The machine according to the invention can be applied in a very broad range and variation of the structure, measures and construction materials enables to achieve the to optimum parameters for the given purpose.

The machine can be applied on a lot of different fields, such as delivering liquids or gases in industrial plants, charging chemicals, delivering fuels, lubricants in machines or vehicles and for producing pressurised gases. It can also be applied for delivering water from wells such as driven wells even if the water contains rather high percentage of solved minerals. Generally, it may be used for all purposes except delivering fluids of high temperature or containing greater solid particles.

It is to be noted that the embodiment described in the disclosure is only shown as an example, and is by no way limiting the scope claimed in the attached claims.

Claims

1. Rotary machine for delivering liquids or gases, comprising a one-start or multi-start screw with a driving unit, a housing, provided with suction and delivery openings and a membrane body arranged between said housing and said screw, **wherein** the housing (2) has an inner space larger than the diameter of the screw (1) and the membrane body (3) is a highly deformable elongated tube-like resilient body being sealingly clamped between the housing (2) of the screw and the housing of the driving unit (10) on one end sealingly fixed to the inner wall of the housing on one part of its outer surface and provided with a cap-like end part, on the other end.

2. The machine as claimed in claim 1, **wherein** the outer surface of the membrane body (3) is sealingly fixed to the inner wall of the housing (2) of the screw (1) along one or more generatrix(es) of the membrane body (3).

3. The machine as claimed in claim 2, **wherein** there are ribs (4) along one or more generatrix(es) of the membrane body (3) and said ribs (4) are clamped in grooves of the housing (2).

4. The machine as claimed in claim any of claims 1 to 3, **wherein** at least a part of the membrane body (3) is cylindrical.

5. The machine as claimed in claim any of claims 1 to 3, **wherein** at least a part of the membrane body (3) is conical.

6. The machine as claimed in claim any of claims 1 to 5, **wherein** the membrane body (3) is made of laminate material.

7. The machine as claimed in claim any of claims 1 to 6, **wherein** the membrane body (3) contains a mesh of textile filaments.

8. The machine as claimed in claim any of claims 1 to 6, **wherein** the membrane body (3) contains resilient filaments.

9. The machine as claimed in claim 8, **wherein** the filaments are of stright, spiral or crimped shape.

10. The machine as claimed in claim any of claims 7 to 9, **wherein** the filaments extend in directions corresponding to the pitch of the screw.

11. The machine as claimed in claim any of claims 1 to 10, **wherein** the membrane body (3) has a corrugated inner and/or outer surface.

12. The machine as claimed in claim any of claims 1 to 11, **wherein** there is a lubricant in the space(s) (8) between the screw (1) and the membrane body (3).

13. The machine as claimed in claim 11, **wherein** the screw (1) is provided with channels (9) for circulation of the lubricant.

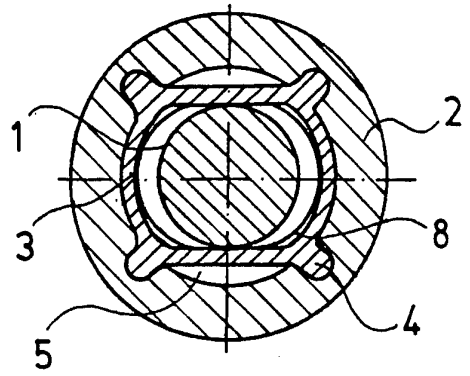

Fig. 2

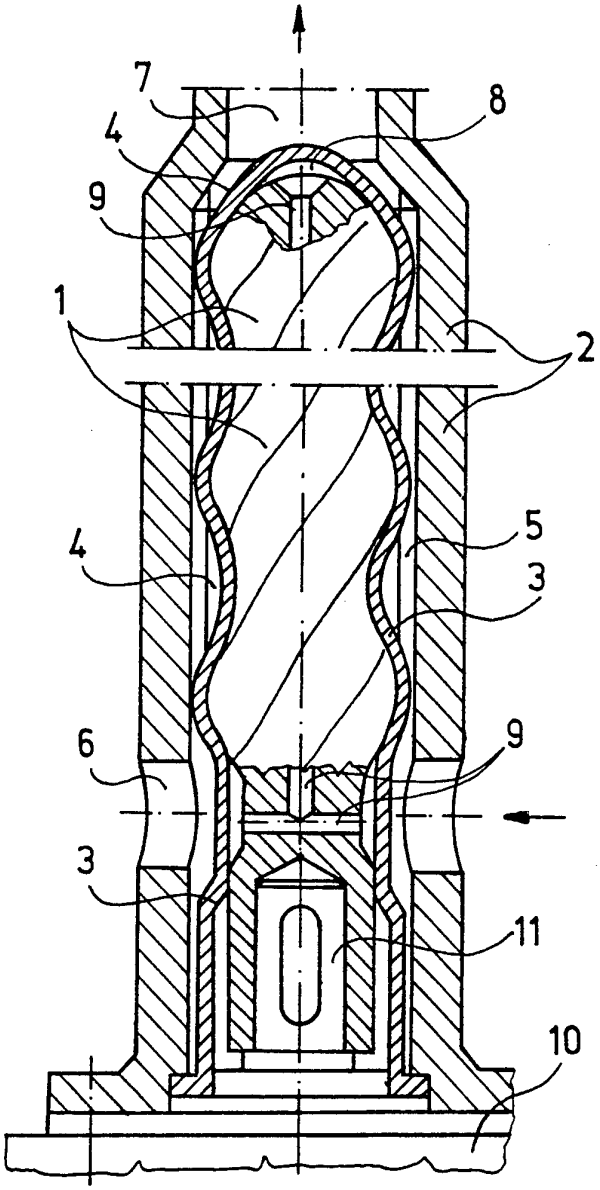

Fig. 1

INTERNATIONAL SEARCH REPORT

International application No.
PCT/HU 94/00004

A. CLASSIFICATION OF SUBJECT MATTER

IPC[5]: F 04 B 43/12; F 04 C 2/107

According to International Patent Classification (IPC) or to both national classification and IPC

B. FIELDS SEARCHED

Minimum documentation searched (classification system followed by classification symbols)

IPC[5]: F 04 B 43/00, 43/08, 43/12, 45/00, 45/02, 45/06; F 04 C 2/00, 2/107, 5/00, 18/00, 18/107

Documentation searched other than minimum documentation to the extent that such documents are included in the fields searched

Electronic data base consulted during the international search (name of data base and, where practicable, search terms used)

C. DOCUMENTS CONSIDERED TO BE RELEVANT

Category*	Citation of document, with indication, where appropriate, of the relevant passages	Relevant to claim No.
X Y	DE, A, 1 653 857 (KOVOPODNIK) 09 July 1970 (09.07.70), totality, esp. fig. 3-7; claims.	1-6,11,12 7-10,13
Y A	US, A, 2 752 860 (WALDIN) 03 July 1956 (03.07.56), totality.	13 1-12
Y A	GB, A, 800 154 (AHMAD AZIZ) 20 August 1958 (20.08.58), totality.	7-10 1-6,11-13

☐ Further documents are listed in the continuation of Box C. ☒ See patent family annex.

* Special categories of cited documents:

"A" document defining the general state of the art which is not considered to be of particular relevance

"E" earlier document but published on or after the international filing date

"L" document which may throw doubts on priority claim(s) or which is cited to establish the publication date of another citation or other special reason (as specified)

"O" document referring to an oral disclosure, use, exhibition or other means

"P" document published prior to the international filing date but later than the priority date claimed

"T" later document published after the international filing date or priority date and not in conflict with the application but cited to understand the principle or theory underlying the invention

"X" document of particular relevance; the claimed invention cannot be considered novel or cannot be considered to involve an inventive step when the document is taken alone

"Y" document of particular relevance; the claimed invention cannot be considered to involve an inventive step when the document is combined with one or more other such documents, such combination being obvious to a person skilled in the art

"&" document member of the same patent family

Date of the actual completion of the international search	Date of mailing of the international search report
24 May 1994 (24.05.94)	14 June 1994 (14.06.94)

Name and mailing address of the ISA/ AT	Authorized officer
AUSTRIAN PATENT OFFICE Kohlmarkt 8-10 A-1014 Vienna	Werdecker e.h.
Facsimile No. 1/53424/535	Telephone No. 1/53424/361

Form PCT/ISA/210 (second sheet) (July 1992)

INTERNATIONAL SEARCH REPORT
Information on patent family members

International application No.
PCT/HU 94/00004

Im Recherchenbericht angeführtes Patentdokument Patent document cited in search report Document de brevet cité dans le rapport de recherche	Datum der Veröffentlichung Publication date Date de publication	Mitglied(er) der Patentfamilie Patent family member(s) Membre(s) de la famille de brevets	Datum der Veröffentlichung Publication date Date de publication
DE A1, 1653857		DE A 1653857 DE B2 1653857 DE C3 1653857	09-07-70 05-07-73 31-01-74
US A 2752860		keine - none - rien	
GB A 800154		keine - none - rien	