(12) INTERNATIONAL APPLICATION PUBLISHED UNDER THE PATENT COOPERATION TREATY (PCT)

(19) World Intellectual Property Organization
International Bureau

(43) International Publication Date
14 June 2001 (14.06.2001)

PCT

(10) International Publication Number
WO 01/41931 A2

(51) International Patent Classification[7]: B01L 3/00

(21) International Application Number: PCT/US00/33499

(22) International Filing Date:
11 December 2000 (11.12.2000)

(25) Filing Language: English

(26) Publication Language: English

(30) Priority Data:

09/458,534	9 December 1999 (09.12.1999)	US
09/460,283	9 December 1999 (09.12.1999)	US
09/460,281	9 December 1999 (09.12.1999)	US
09/466,325	17 December 1999 (17.12.1999)	US

(63) Related by continuation (CON) or continuation-in-part (CIP) to earlier application:
US Not furnished (CIP)
Filed on Not furnished

(71) Applicant *(for all designated States except US)*: **MOTOROLA, INC.** [US/US]; 1303 East Algonquin Road, Schaumburg, IL 60196 (US).

(72) Inventors; and

(75) Inventors/Applicants *(for US only)*: **BRISCOE, Cynthia, G.** [US/US]; 62 W. Buena Vista Drive, Tempe, AZ 85284 (US). **BURDON, Jeremy, W.** [US/US]; 11883 N. 137th Way, Scottsdale, AZ 85259 (US). **CHAN, Tony** [US/US]; 13030 East Shangi-La Road, Scottsdale, AZ 85259 (US). **FOLEY, Barbara** [US/US]; 14842 South Foxtail Lane, Phoenix, AZ 85048 (US). **GRODZINSKI, Piotr** [PL/US]; 2658 North Ellis Street, Chandler, AZ 85224 (US). **HAWKINS, George** [US/US]; 429 E. Barbarita Avenue, Gilbert, AZ 85234 (US). **HUANG, Rong-Fong** [US/US]; 196 East Palomino Drive, Tempe, AZ 85284 (US). **KAHN, Peter** [US/US]; 2702 E. Verbera Drive, Phoenix, AZ 85048 (US). **MARRERO, Robert** [US/US]; 3939 W. Windmills Boulevard, #1065, Chandler, AZ 85226 (US). **MCGARRY, Mark, W.** [US/US]; 3600 N. Hayden Road, #2513, Scottsdale, AZ 85251 (US). **TUGGLE, Todd** [US/US]; 5918 W. Drake Court, Chandler, AZ 85226 (US). **YU, Huinan** [CN/US]; 5760 W. Park Avenue, Chandler, AZ 85226 (US).

(74) Agents: **SILVA, Robin, M.** et al.; Flehr Hohbach Test Albritton & Herbert LLP, 4 Embarcadero Center, Suite 3400, San Francisco, CA 94111-4187 (US).

(81) Designated States *(national)*: AE, AG, AL, AM, AT, AU, AZ, BA, BB, BG, BR, BY, BZ, CA, CH, CN, CR, CU, CZ, DE, DK, DM, DZ, EE, ES, FI, GB, GD, GE, GH, GM, HR, HU, ID, IL, IN, IS, JP, KE, KG, KP, KR, KZ, LC, LK, LR, LS, LT, LU, LV, MA, MD, MG, MK, MN, MW, MX, MZ, NO, NZ, PL, PT, RO, RU, SD, SE, SG, SI, SK, SL, TJ, TM, TR, TT, TZ, UA, UG, US, UZ, VN, YU, ZA, ZW.

(84) Designated States *(regional)*: ARIPO patent (GH, GM, KE, LS, MW, MZ, SD, SL, SZ, TZ, UG, ZW), Eurasian patent (AM, AZ, BY, KG, KZ, MD, RU, TJ, TM), European patent (AT, BE, CH, CY, DE, DK, ES, FI, FR, GB, GR, IE, IT, LU, MC, NL, PT, SE, TR), OAPI patent (BF, BJ, CF, CG, CI, CM, GA, GN, GW, ML, MR, NE, SN, TD, TG).

Published:
— *Without international search report and to be republished upon receipt of that report.*

For two-letter codes and other abbreviations, refer to the "Guidance Notes on Codes and Abbreviations" appearing at the beginning of each regular issue of the PCT Gazette.

WO 01/41931 A2

(54) Title: MULTILAYERED MICROFLUIDIC DEVICES FOR ANALYTE REACTIONS

(57) Abstract: The invention relates generally to methods and apparatus for conducting analyses, particularly microfluidic devices. In preferred aspects, the devices are fabricated using ceramic multilayer technology to form devices in which parallel, independently controlled molecular reactions, such as nucleic acid amplification reactions including the polymerase chain reaction (PCR) can be performed. Additionally, the devices can include and comprise micro-gas chromatographs similarly fabricated from ceramics.

MULTILAYERED MICROFLUIDIC DEVICES FOR ANALYTE REACTIONS

This is a continuing application of U.S.S.N.s 09/460,281, filed December 9, 1999; 09/460,283, filed December 9, 1999; 09/458,534, filed December 9, 1999; and 09/466,325, filed December 17, 1999.

FIELD OF THE INVENTION

The invention relates generally to methods and apparatus for conducting analyses, particularly microfluidic devices. In preferred aspects, the devices are fabricated using ceramic multilayer technology to form devices in which parallel, independently controlled molecular reactions, such as nucleic acid amplification reactions including the polymerase chain reaction (PCR) can be performed. Additionally, the devices can include and comprise micro-gas chromatographs similarly fabricated from ceramics.

BACKGROUND OF THE INVENTION

There are a number of assays and sensors for the detection of the presence and/or concentration of specific substances in fluids and gases. Many of these rely on specific ligand/antiligand reactions as the mechanism of detection. That is, pairs of substances (i.e. the binding pairs or ligand/antiligands) are known to bind to each other, while binding little or not at all to other substances. This has been the focus of a number of techniques that utilize these binding pairs for the detection of the complexes. These generally are done by labeling one component of the complex in some way, so as to make the entire complex detectable, using, for example, radioisotopes, fluorescent and other optically active molecules, enzymes, etc.

Of particular interest are methods of analyzing the nucleic acid in a sample of cells. The conventional way of analyzing the nucleic acid present in a sample of cells involves performing multiple steps using several different bench top instruments in a laboratory setting. First, the nucleic acid must be extracted from the cells in the sample. This is typically done by performing any number of cell lysing procedures that cause the cells to break apart and release their contents. Next, the nucleic acid is typically separated from the rest of the cell contents, as the presence of other cell contents may be undesirable in subsequent steps. Frequently, a nucleic acid amplification reaction is done to obtain suitable amounts of nucleic acid for characterization. The resulting amplified nucleic acid products can then be identified by any number of techniques.

There are a variety of nucleic acid amplification reactions that are used, some of which utilize thermal cycling. Briefly, these techniques can be classified as either target amplification or signal amplification. Target amplification involves the amplification (i.e. replication) of the target sequence to be detected, resulting in a significant increase in the number of target molecules. Target amplification strategies include the polymerase chain reaction (PCR), strand displacement amplification (SDA), nucleic acid sequence based amplification (NASBA), and transcription mediated amplification (TMA).

Alternatively, rather than amplify the target, alternate techniques use the target as a template to replicate a signalling probe, allowing a small number of target molecules to result in a large number of signalling probes, that then can be detected. Signal amplification strategies include the ligase chain reaction (LCR), cycling probe technology (CPT), Invader™, Q-beta replicase (QBR), and the use of "amplification probes" such as "branched DNA" that result in multiple label probes binding to a single target sequence.

The polymerase chain reaction (PCR) is widely used and described, and involve the use of primer extension combined with thermal cycling to amplify a target sequence. This technique has been applied to a wide variety of biological methods, including for example, DNA sequence analysis, probe generation, cloning of nucleic acid sequences, directed mutagenesis, detection of genetic mutations, diagnoses of viral infections, molecular "fingerprinting," and the monitoring of contaminating microorganisms. See U.S. Patent Nos. 4,683,195 and 4,683,202, and PCR Essential Data, J. W. Wiley & sons, Ed. C.R. Newton, 1995, all of which are incorporated by reference. In addition, there are a number of variations of PCR which may also find use in the invention, including "quantitative competitive PCR" or "QC-PCR", "arbitrarily primed PCR" or "AP-PCR" , "immuno-PCR", "Alu-PCR", "PCR single strand conformational polymorphism" or "PCR-SSCP", "reverse transcriptase PCR" or "RT-PCR", "biotin capture PCR", "vectorette PCR". "panhandle PCR", and "PCR select cDNA subtration", among others.

The polymerase chain reaction comprises repeated rounds, or cycles, of target denaturation, primer annealing, and extension. This reaction process yields an exponential amplification of the desired target sequence and is most advantageously accomplished through the use of a thermally-stable polymerase. The length of time required to complete a particular PCR protocol is dependent upon the number of amplification cycles as well as the length of the denaturation, annealing, and extension steps. A typical PCR performed on a conventional thermal cycler can often take several hours.

The fidelity and efficiency of PCR amplification is affected by several factors. These factors include the concentration of various reaction components, particularly the polymerase, deoxynucleotide triphosphates, magnesium ions, target molecules, and amplimers (amplification primer pair), the length and temperature of the denaturation, annealing, and extension steps, the number of cycles, and the specificity and length of the amplimers. Since the success of any given PCR amplification depends upon a number of variables, optimized reaction conditions are often empirically determined. However, such an optimization process is usually labor intensive, costly, and time consuming.

Strand displacement amplification (SDA) is generally described in Walker et al., in Molecular Methods for Virus Detection, Academic Press, Inc., 1995, and U.S. Patent Nos. 5,455,166 and 5,130,238, all of which are hereby incorporated by reference.

Nucleic acid sequence based amplification (NASBA) is generally described in U.S. Patent No. 5,409,818; Sooknanan et al., Nucleic Acid Sequence-Based Amplification, Ch. 12 (pp. 261-285) of Molecular Methods for Virus Detection, Academic Press, 1995; and "Profiting from Gene-based Diagnostics", CTB International Publishing Inc., N.J., 1996, both of which are incorporated by reference.

Transcription mediated amplification (TMA) is generally described in U.S. Patent Nos. 5,399,491, 5,888,779, 5,705,365, 5,710,029, all of which are incorporated by reference.

Cycling probe technology (CPT) is a nucleic acid detection system based on signal or probe amplification rather than target amplification, such as is done in polymerase chain reactions (PCR). Cycling probe technology relies on a molar excess of labeled probe which contains a scissile linkage of RNA. Upon hybridization of the probe to the target, the resulting hybrid contains a portion of RNA:DNA. This area of RNA:DNA duplex is recognized by RNAseH and the RNA is excised, resulting in cleavage of the probe. The probe now consists of two smaller sequences which may be released, thus leaving the target intact for repeated rounds of the reaction. The unreacted probe is removed and the label is then detected. CPT is generally described in U.S. Patent Nos. 5,011,769, 5,403,711,

5,660,988, and 4,876,187, and PCT published applications WO 95/05480, WO 95/1416, and WO 95/00667, all of which are specifically incorporated herein by reference.

The ligation chain reaction (LCR) involve the ligation of two smaller probes into a single long probe, using the target sequence as the template for the ligase. See generally U.S. Patent Nos. 5,185,243 and 5,573,907; EP 0 320 308 B1; EP 0 336 731 B1; EP 0 439 182 B1; WO 90/01069; WO 89/12696; and WO 89/09835, all of which are incorporated by reference.

Q-beta replicase (QBR) is a mRNA amplification technique, similar to NASBA and TMA, that relies on an RNA-dependent RNA polymerase derived from the bacteriophage Q-beta that can synthesize up to a billion stands of product from a template.

Invader™ technology is based on structure-specific polymerases that cleave nucleic acids in a site-specific manner. Two probes are used: an "invader" probe and a "signalling" probe, that adjacently hybridize to a target sequence with a non-complementary overlap. The enzyme cleaves at the overlap due to its recognition of the "tail", and releases the "tail" with a label. This can then be detected. The Invader™ technology is described in U.S. Patent Nos. 5,846,717; 5,614,402; 5,719,028; 5,541,311; and 5,843,669, all of which are hereby incorporated by reference.

"Rolling circle amplification" is based on extension of a circular probe that has hybridized to a target sequence. A polymerase is added that extends the probe sequence. As the circular probe has no terminus, the polymerase repeatedly extends the circular probe resulting in concatamers of the circular probe. As such, the probe is amplified. Rolling-circle amplification is generally described in Baner *et al.* (1998) *Nuc. Acids Res.* 26:5073-5078; Barany, F. (1991) *Proc. Natl. Acad. Sci. USA* 88:189-193; Lizardi *et al.* (1998) *Nat. Genet.* 19:225-232; Zhang et al., Gene 211:277 (1998); and Daubendiek et al., Nature Biotech. 15:273 (1997); all of which are incorporated by reference in their entirety.

"Branched DNA" signal amplification relies on the synthesis of branched nucleic acids, containing a multiplicity of nucleic acid "arms" that function to increase the amount of label that can be put onto one probe. This technology is generally described in U.S. Patent Nos. 5,681,702, 5,597,909, 5,545,730, 5,594,117, 5,591,584, 5,571,670, 5,580,731, 5,571,670, 5,591,584, 5,624,802, 5,635,352, 5,594,118, 5,359,100, 5,124,246 and 5,681,697, all of which are hereby incorporated by reference.

Similarily, dendrimers of nucleic acids serve to vastly increase the amount of label that can be added to a single molecule, using a similar idea but different compositions. This technology is as described

in U.S. Patent No. 5,175,270 and Nilsen et al., J. Theor. Biol. 187:273 (1997), both of which are incorporated herein by reference.

The ability to perform a variety of preparation and amplification steps in a single miniaturized device has the potential for saving time and expense. Such miniaturized devices can be made much more portable than conventional apparatus, thereby enabling samples to be analyzed outside of the laboratory, such as the location where the samples are collected. A miniaturized DNA analysis device can also allow the analysis steps to be automated more easily. As a result, assays could be performed by less highly trained personnel than presently required.

Thus, there is a significant trend to reduce the size of these sensors, both for sensitivity and to reduce reagent costs. Thus, a number of microfluidic devices have been developed, generally comprising a solid support with microchannels, utilizing a number of different wells, pumps, reaction chambers, and the like. See for example EP 0637996 B1; EP 0637998 B1; WO96/39260; WO97/16835; WO98/13683; WO97/16561; WO97/43629; WO96/39252; WO96/15576; WO96/15450; WO97/37755; and WO97/27324; and U.S. Patent Nos. 5,304,487; 5,071531; 5,061,336; 5,747,169; 5,296,375; 5,110,745; 5,587,128; 5,498,392; 5,643,738; 5,750,015; 5,726,026; 5,35,358; 5,126,022; 5,770,029; 5,631,337; 5,569,364; 5,135,627; 5,632,876; 5,593,838; 5,585,069; 5,637,469; 5,486,335; 5,755,942; 5,681,484; and 5,603,351. In addition, there are a number of devices including PCR microchips fabricated on silicon or glass (Wilding et al., 1994, *Clin. Chem.* 40:1815-18; Shoffer et al., 1996, *Nucleic Acids Res.* 24:375-79; Cheng et al., 1996, *Nucleic Acids Res.* 24:380-85; Woodley et al., 1996, *Anal. Chem.* 68:4081-86; Northrup et al., 1998, *Anal. Chem.* 70:918-22; Ibrahim et al., 1998, *Anal. Chem.* 70:2013-17; U.S. Patent No. 5,498,392 (Wilding et al., 1996), U.S. Patent No. 5,587,128 (Wilding et al., 1996), U.S. Patent No. 5,589,136 (Northrup et al., 1996)).

While conventional PCR is performed in volumes of between 10-100 mL and require several hours to process, microchip PCR is performed in volumes of less than 5 mL and can be completed in minutes. The decrease in reaction time for microchip PCR has been achieved as a result of the low thermal mass of silicon reaction chambers and the integration of thin-film heaters (Northrup et al., 1998, *Anal. Chem.* 70:918).

While silicon microchip arrays have been fabricated for the parallel analysis of multiple samples (Belgrader et al., 1998, *Clin. Chem.* 44:2191-94), such devices do not facilitate reaction condition optimization. In order to rapidly optimize amplification conditions for a particular target and amplimer pair, an investigator must be able to perform independently controlled, parallel amplifications on a single microchip array. Due to the inefficient well-to-well thermal isolation achievable in arrays

constructed of silicon or glass and the complicated fabrication methods required to prepare microchip arrays from such materials, present techniques have not permitted preparation of a cost-effective commercial microchip array for performing such optimization experiments.

Existing apparatus for performing thermally-controlled biological reactions on a substrate surface are deficient in that they either require unacceptably large volumes of sample fluid to operate properly, cannot accommodate substrates as large as or larger than a conventional microscope slide, cannot independently accommodate a plurality of independent reactions, or cannot accommodate a substrate containing hydrogel-based microarrays. Most existing apparatus also do not allow introduction of fluids in addition to the sample fluid such as wash buffers, fluorescent dyes, etc., into the reaction chamber. Disposable apparatus require disassembly and reapplication of a new apparatus to the substrate surface every time a new fluid must be introduced. Other existing apparatus are difficult to use in a laboratory environment because they cannot be loaded with standard pipet tips and associated pipettor apparatus.

Many existing apparatus also exhibit unacceptable reaction reproducibility, efficiency, and duration. Reaction reproducibility may be adversely affected by bubble formation in the reaction chamber or by the use of biologically incompatible materials for the reaction chamber. Reaction duration and efficiency may be adversely affected by the presence of concentration gradients in the reaction chamber.

Bubbles can form on introduction of sample fluid to the reaction chamber, at elevated temperatures during the reaction due to the potential high gas content of the fluid, or by outgassing of the reaction chamber materials. When gas bubbles extend over the substrate surface in an area containing biologically reactive sites, the intended reaction may intermittently fail or yield erroneous results because the intended concentration of the sample fluid mixture has been compromised by the presence of gas bubbles. To aggravate the problem, gas bubbles in the reaction chamber attempt to expand at elevated temperatures during the reaction and periodically cause the seal between the substrate surface and reaction chamber apparatus to fail, allowing leakage and evaporation of the sample fluid.

Biologically incompatible reaction chamber materials may cause unacceptable reaction reproducibility, by interacting with the sample fluid, thus causing the intended reaction to intermittently fail or yield erroneous results

Incomplete mixing of the sample fluid can introduce concentration gradients within the sample fluid that adversely impact reaction efficiency and duration. This effect is most pronounced when there is

depletion of target molecules in the local volume surrounding a biologically reactive site. During a biological reaction, the probability that a particular target molecule will bind to a complementary (immobilized) probe molecule is determined by the given concentration of target molecules present within the sample fluid volume, the diffusion rate of the target molecule through the reaction chamber, and the statistics of interaction between the target molecule and the complementary probe molecule. For diagnostic assays, target DNA molecules are often obtained in minute (< picomol) quantities. In practice, it can take tens of hours for a hybridization reaction~~, for example,~~ to be substantially complete at the low target nucleic acid molecule levels available for biological samples. Concentration gradients further exacerbate this problem.

U.S. Patent 5,948,673 to Cottingham discloses a self-contained multi-chamber reactor for performing both DNA amplification and DNA probe assays in a sealed unit wherein some reactants are provided by coating the walls of the chambers and other reactants are introduced into the chambers prior to starting the reaction in order to eliminate flow into and out of the chamber. Unfortunately, no provisions are made for pressurization or mixing of the sample fluid introduced to the chambers, and the apparatus cannot accommodate substrates including microscope slides.

There remains a need in the art for methods and apparatus for performing biological reactions on a substrate surface that use a low volume of sample fluid, accommodate substrates as large as or larger than a conventional microscope slide, accommodate a plurality of independent reactions, and accommodate a substrate surface having one or more hydrogel-based microarrays attached thereto. There also remains a need in the art for an apparatus that allows introduction of fluids in addition to sample fluid into each reaction chamber via standard pipet tips and associated pipettor apparatus. There also remains a need in the art for such an apparatus that increases reaction reproducibility, increases reaction efficiency, and reduces reaction duration. Similarly, there remains a need in this art for a microchip array for performing independently controlled parallel reactions. Such a device would reduce the time and cost required to optimize amplification conditions using conventional PCR techniques and equipment or currently available PCR microchip arrays.

Gas chromatography is a well-established analytical technique that is commonly used for the separation and detection of the various chemical components present in gases and low boiling point liquids. The technique is widely used in organic chemistry research, pharmaceutical development, and forensic specimen analysis. A gas chromatography system typically has five major components: (1) a carrier gas; (2) a sample injector; (3) a gas chromatography column; (4) a detector; and (5) a data processing system. The carrier gas, also referred to as the mobile phase, is a high-purity and relatively inert gas, such as helium. The carrier gas flows through the column throughout the

separation process. The sample injector introduces a precise and, typically, very small volume of the sample, in gaseous form, into the flow of carrier gas into the column. The gaseous sample typically includes a number of different chemical components that are intended to be separated by the gas chromatograph. To effect this separation, the inside of the column is coated with a stationary phase that adsorbs the different chemical components in the sample to differing degrees. These differences in adsorption cause differing propagation delays for the chemical components as they travel down the column, thereby effecting a physical separation of the sample into its chemical components. The detector is located after the column and serves to detect the various chemical components in the sample as they emerge from the column at different times. The data processing system reads the detector and is typically able to store, process, and record the results.

Conventional gas chromatography systems are bench top instruments that are designed for use in a laboratory setting. However, in many instances, it is desirable to have a portable gas chromatograph that can be used outside of the laboratory, such as where the samples are collected. Portable gas chromatographs have potential application for leak detection, environmental screening, monitoring the volatile organic chemical content of waste water, and in the detection and analysis of vent gases, land fill gases, and natural gas.

One of the most significant barriers to making a portable gas chromatograph device is that the separation efficiency of the device is directly proportional to the length of the column. Currently, a few portable gas chromatography systems are available, but they are only suited for the detection of certain specific substances. In recent years, efforts have been made to fabricate the column and detector using newly developed micromachining techniques in order to provide miniaturized gas chromatography systems that are portable and that can analyze multiple substances.
Such micro-gas chromatograph devices are most commonly fabricated from silicon substrates. However, such substrates have a number of disadvantages. For example, a micro-gas chromatograph column has been fabricated by etching an interlocking spiral channel about 10 microns deep and 300 microns wide in a silicon wafer. *See* Reston, et al., "Silicon-Micromachined Gas Chromatography System Used to Separate and Detect Ammonia and Nitrogen Dioxide," *J. Microelectromechanical Systems*, 3:134-146 (1994). The top surface of the column was defined by a borosilicate glass plate anodically bonded to the silicon wafer. Because the bond frequently failed along the edges, presumably because of the mismatch in thermal expansion coefficients of the two materials, the column was restricted to an area in the center of the wafer about 3.8 cm in diameter. Accordingly, the anodic bonding process used with silicon substrates serves to limit the length and, thus, the separation efficiency of the column. Another limitation on the length of the column in the Reston device is that it lies all in one plane, namely, the interface of the silicon and glass layers. Still

another disadvantage with this approach is that, because the column is defined by dissimilar materials, thermal gradients can develop that further decrease the column's separation efficiency. Goedert, U.S. Patent No. 4,935,040 discloses a micro-gas chromatograph device that is made up of multiple layers. Several planar column sections are defined by the interfaces between pairs of layers, and the planar column sections are connected in series to increase the available column length. The layers alternate between silicon and glass wafers that are joined together by anodic bonding. Alternatively, the layers may be silicon, with bonding effected by a thin layer of silica between. By using multiple layers, the Goedert device is able to provide a longer column. However, anodically bonding multiple layers is difficult to achieve reliably.

Accordingly, it is an object of the invention to provide ceramic microfluidic devices that can be used in a variety of ways, including in nucleic acid amplification reactions, particularly those utilizing thermal cycling or control.

SUMMARY OF THE INVENTION

In accordance with the objects outlined above, the present invention provides microfluidic devices comprising a ceramic support comprising at least a first sample inlet port, at least a first sample handling well comprising a least one well port, a first microchannel to allow fluid contact between said sample inlet port and said sample handling well port and at least a first thermal module in thermal contact with said first sample handing well.

In an additional aspect, the devices comprise ceramic supports comprising a plurality of sample handling wells. The wells may comprise a thermal conducting layer and be separated by a thermal insulating layer. The devices also include a thermal module and a temperature sensor. In addition, the wells may optionally be coated with a compound that enhances biocompatibility (such as parylene) between the sample and the wells.

In a further aspect, the devices comprise thermal modules comprising thin film resistive heaters or metal wire resistive heater, which may be integrated into the thermal insulating material of the supporting substrate. Similarly, the thermal modules may comprise cooling systems such as metal plates or discs or thermo-electric coolers. The thermal modules may comprise individual addressable modules.

In an additional aspect, the invention comprises devices for performing biological reactions on a substrate layer having a surface containing a plurality of biologically reactive sites disposed thereon,

comprising a base plate having a first surface and a second surface, wherein the first surface further comprises a cavity comprising one or a plurality of wells and a compression plate removably seated on said substrate for removably affixing the substrate to said base plate. The devices further comprise a sealing member disposed in each well structure, wherein each sealing member defines a reaction chamber between the surface of the substrate layer containing the biologically reactive sites and the first surface of the base plate and a first and second fluid port extending from each reaction chamber to the lower surface of the base plate. The devices additionally include a fluid port seal for temporily closing the fluid ports and isolating the reaction chambers from the environment. Optionally, the apparatus comprises a multiplicity of reaction chambers in which a plurality of independently controlled biological reactions can be performed, as well as delivery module for delivering fluid to a reaction chamber through the first fluid port and a removal or waste module for removing fluid from a reaction chamber through the second fluid port. The delivery and/or removal module can comprise tubing attached to the fluid ports. Optionally, the device can include a pressure module for pressurizing the contents of the reaction chambers, and/or a compliance layer disposed between the compression plate and the substrate. The compliance layer can be a first layer of low-compression material such as silicon sponge rubber, natural sponge rubber or neoprene sponge rubber, and a second layer of pressure-sensitive adhesive.

In a further aspect, the devices have the base plate with a perimeter and plurality of retaining pins disposed along the perimeter, and wherein the compression plate has a perimeter and a plurality of apertures disposed along the perimeter aligned with the retaining pins on the base plate, and wherein the compression plate is removable affixed to the base plate by positioning the compression plate so that the retaining pins extend through the apertures.

In an additional aspect, the compression plate further comprises one or more viewing ports extending through the compression plate at a position on the plate that corresponds to the position of each reaction chamber.

In a further aspect, the base plate is made of a thermally conductive material such as titanium, copper, aluminum or ceramic. The base plate can be coated with a biologically compatible material, such as fluorinated ethylene propylene, polypropylene, elemental gold, or elemental platinum. There may optionally be a biologically compatible primer layer, such as a fluoropolymer, disposed between the first surface of the base plate and the biologically compatible base plate surface coating.

IN an additional aspect, the sealing member is an O-ring, a gasket, a compressible washer, or a layer of grease.

In a further aspect, the invention provides an apparatus for performing biological reactions on a substrate having a first surface containing a plurality of biologically reactive sites attached thereto, comprising a base plate having a first surface and a second surface, wherein the first surface further comprises a first cavity comprising one or a plurality of well structures and a second cavity, and wherein the substrate is removably seated in the cavity, and wherein the well structures are in direct communication with the first surface of the substrate; a groove in each well structure having an inner perimeter and a width; a sealing member disposed in the groove in each well structure, wherein each sealing member defines a reaction chamber between the first surface of the substrate layer and the first surface of the base plate; a compression plate having a cavity and one or more viewing ports extending through the compression plate and corresponding in position to the reaction chambers, wherein the compression plate is removably seated on the second surface of the substrate for removably affixing the substrate in the cavity of the base plate; a compliance layer disposed in the cavity of the compression plate having one or more viewing ports extending through the compliance layer and corresponding in position to the reaction chambers; a retaining plate removably seated on the compression plate; a plurality of retaining pins disposed around the perimeter of the base plate which are removably inserted into a corresponding plurality of apertures in the compression layer and a corresponding plurality of apertures in the retaining plate; a biologically compatible primer layer applied to the base plate and the retaining pins; a biologically compatible surface coating applied to the primer layer; a first fluid port and a second fluid port extending from each reaction chamber to the lower surface of the base plate; a fluid port seal for temporarily closing the fluid ports and isolating the reaction chambers from the environment; a heating element disposed beneath the base plate, and a thermal cycling device operatively connected to the heating element.

In a further aspect, the invention provides apparatus for performing biological reactions on a substrate layer, comprising a substrate having a first surface containing a plurality of biologically reactive sites disposed thereon and a second surface opposite the first surface; a base plate having a first surface and a second surface, wherein the first surface further comprises a cavity comprising one or a plurality of well structures; a compression plate removably seated on the substrate for removably affixing the substrate to base plate; a sealing member disposed in each well structure, wherein each sealing member defines a reaction chamber between the surface of the substrate layer containing the biologically reactive sites and the first surface of the base plate; a first fluid port and a second fluid port extending from each reaction chamber to the lower surface of the base plate, and a fluid port seal for temporarily closing the fluid ports and isolating the reaction chambers from the environment. Optionally, the apparatus can comprise a multiplicity of reaction chambers in which a plurality of independently controlled biological reactions can be performed. Fluid handling can also be provided, such as tubing. Similarly, the first surface of the substrate further comprises an array of 3-dimensional

anchoring structures for biological molecules such as hydrogels, as outlined herein. The base plate optionally has a perimeter and plurality of retaining pins disposed along the perimeter, and wherein the compression plate has a perimeter and a plurality of apertures disposed along the perimeter aligned with the retaining pins on the base plate, and wherein the compression plate is removable affixed to the base plate by positioning the compression plate so that the retaining pins extend through the apertures. As above, the compression plate can also comprise one or more viewing ports extending through the compression plate at a position on the plate that corresponds to the position of each reaction chamber. Alternatively, the compliance layer further comprises one or more viewing ports extending through the compliance layer at a position that corresponds to the position of each reaction chamber, and wherein the compression plate further comprises one or more viewing ports extending through the compression plate at a position on the plate that corresponds to the position of each reaction chamber and the position of each viewing port in the compliance layer. The base plate can optionally comprises a second cavity, and wherein the substrate is removably seated in the second cavity.

In an additional aspect, the invention provides an apparatus for performing biological reactions on a substrate surface, comprising a substrate having a first surface containing a plurality of biologically reactive sites attached thereto and a second surface opposite the first surface; a base plate having a first surface and a second surface, wherein the first surface further comprises a cavity and one or a plurality of well structures, and wherein the substrate is removably seated in the cavity, and wherein the well structures are in direct communication with the first surface of the substrate; a groove in each well structure having an inner perimeter and a width; a sealing member disposed in the groove in each well structure, wherein each sealing member defines a reaction chamber between the first surface of the substrate layer and the first surface of the base plate; a compression plate having a cavity and one or more viewing ports extending through the compression plate and corresponding in position to the reaction chambers, wherein the compression plate is removably seated on the second surface of the substrate for removably affixing the substrate in the cavity of the base plate; a compliance layer disposed in the cavity of the compression plate having one or more viewing ports extending through the compliance layer and corresponding in position to the reaction chambers; a retaining plate removably seated on the compression plate; a plurality of retaining pins disposed around the perimeter of the base plate which are removably inserted into a corresponding plurality of apertures in the compression layer and a corresponding plurality of apertures in the retaining plate; a biologically compatible primer layer applied to the base plate and the retaining pins; a biologically compatible surface coating applied to the primer layer; a first fluid port and a second fluid port extending from each reaction chamber to the lower surface of the base plate; a fluid port seal for temporarily closing

the fluid ports and isolating the reaction chambers from the environment; a heating element disposed beneath the base plate, and a thermal cycling device operatively connected to the heating element.

In a further aspect, the invention provides methods for performing biological reactions, comprising the steps of loading a substrate having a first surface containing a plurality of biologically reactive sites into one of above apparatus; loading a biological fluid sample into each reaction chamber of the apparatus; affixing the fluid port seal to the second surface of the base plate; heating the apparatus; allowing the reaction to proceed to completion; removing the fluid port seal; removing the fluid samples from the reaction chambers, and removing the substrate from the apparatus.

In an additional aspect, the invention provides methods for performing biological reactions, comprising the steps of loading a biological fluid sample into each reaction chamber of an apparatus described herein; affixing the fluid port seal to the second surface of the base plate; heating the apparatus; allowing the reaction to proceed to completion; removing the fluid port seal; removing the fluid samples from the reaction chambers, and removing the substrate from the apparatus.

In a further aspect, the invention provides multilayered micro-gas chromatograph devices for analyzing an analyte gas comprising a plurality of chemical components, said device comprising ceramic solid support comprising a micro-gas chromatograph column comprising an inlet port for receiving said analyte gas; a stationary phase for differentially absorbing chemical components in said analyte gas; and an outlet port for releasing said analyte gas. The devices may optionally comprise a supply of a carrier gas, a sample injection valve, connected to said supply; and a detector linked to said outlet port.

BRIEF DESCRIPTION OF THE DRAWINGS

Figure 1 is a schematic diagram of a microfluidic DNA analysis system, in accordance with a preferred embodiment of the present invention.

Figure 2 is a schematic diagram of the DNA detection system of Figure 1, in accordance with a preferred embodiment of the present invention.

Figure 3 is a cross-sectional sectional view of a microfluidic DNA amplification device, in accordance with a first preferred embodiment of the present invention.

Figure 3A is a partial top plan view of the microfluidic DNA amplification device of Figure 3, in accordance with a first preferred embodiment of the present invention.

Figure 4 is a cross-sectional view of a microfluidic DNA amplification device, in accordance with a second preferred embodiment of the present invention.

Figure 4A is a partial top plan view of the microfluidic DNA amplification device of Figure 4, in accordance with a second preferred embodiment of the present invention.

Figure 5 is a schematic representation of a cross-sectional view of a microchip array according to one embodiment of the invention.

Figure 6 is a schematic representation of the a cross sectional view of a microchip array according to one embodiment of the invention.

Figures 7A-7B are schematic representations of (A) a sixteen well microchip array and (B) a cross-sectional view of the embedded heating elements of a microchip array according to one embodiment of the invention.

Figure 8 is a schematic representation of a microchip array of the invention having column-and-row electrical addressing.

Figure 9 is a schematic representation of a microchip array with individual electrical addressing.

Figure 10 is a schematic representation of a cross-sectional view of a microchip well structure and integrated heating and cooling elements.

Figures 11A-11C illustrate the thermal cycling capability of the microchip device of the invention during a 25-cycle experiment (Figure 11A), over the course of 2 cycles in a 25-cycle experiment (Figure 11B), and over the course of 2 cycles in a 25-cycle experiment in which the microchip device was clamped to a commercially available thermal cycler (Figure 11C). In all experiments illustrated, a cycle consisted of a "denaturation" step of 45 sec. at 94°C and an "annealing" step of 60 sec. at 72°C.

Figure 12 illustrates the results obtained for the PCR amplification of *bla* using the microchip device of the present invention, the left-hand lane contains fragment size standards.

Figure 13 is an exploded perspective view from the upper side of a specific embodiment of the present invention, illustrating the relationships between the various components and a biochip.

Figure 14 is an exploded perspective view from the lower side of the apparatus of Figure 13, illustrating the proper orientation of a biochip.

Figure 15 is a perspective view from the upper side of the apparatus of Figure 13, illustrating the apparatus as assembled and ports for viewing the contents of each reaction chamber.

Figure 16 is a perspective view from the lower side of the apparatus of Figure 13, illustrating the relationship of the fluid port-sealing member to the base plate.

Figure 17 is an enlarged partial view of the apparatus of Figure 13, illustrating details of the base plate and the relationship of the retaining pins to the base plate.

Figure 18 is an enlarged partial view of the biochip as shown in Figure 14, illustrating a hydrogel-based microarray attached to a substrate surface.

Figure 19 is a top view of the apparatus of Figure 13, illustrating ports for viewing the contents of each reaction chamber.

Figure 20 is a cross-sectional view of the apparatus of Figure 13 taken along line 8-8 in Figure 19, illustrating a reaction chamber.

Figure 21 is an enlarged partial view of the apparatus of Figure 13, illustrating the spatial relationship between a reaction chamber and a biochip.

Figure 22 is an enlarged partial view of the apparatus of Figure 13, illustrating a reaction chamber seal.

Figure 23 is a cross-sectional view of the apparatus of Figure 13 taken along line 8-8 in Figure 19, illustrating a pipet tip inserted into a fluid port.

Figure 24 is a front-end plan view of the apparatus of Figure 13, illustrating the application of a heating element for temperature cycling.

Figure 25 is a top view of the apparatus of Figure 13, illustrating an O-ring groove in relation to a well structure and microarray.

Figure 26 is a schematic diagram of a micro-gas chromatograph system, in accordance with a preferred embodiment of the present invention.

Figure 27 is a sectional schematic view of a micro-gas chromatograph device, in accordance with a preferred embodiment of the present invention.

Figure 28 is a sectional schematic view of the detector in the micro-gas chromatograph device of Figure 26, in accordance with a preferred embodiment of the present invention.

Figure 29 is a top schematic view of one of the layers of the micro-gas chromatograph device of Figure 27, in accordance with a preferred embodiment of the present invention.

Figure 30 is a top schematic view of a green-sheet layer with a planar column section defined therein, in accordance with a preferred embodiment of the present invention.

DETAILED DESCRIPTION OF THE INVENTION

The invention provides microfluidic cassettes or devices that can be used to effect a number of manipulations on a sample to ultimately result in target analyte detection or quantification. These manipulations can include cell handling (cell concentration, cell lysis, cell removal, cell separation, etc.), separation of the desired target analyte from other sample components, chemical or enzymatic reactions on the target analyte, detection of the target analyte, etc. The devices of the invention can include one or more wells for sample manipulation, waste or reagents; microchannels to and between these wells, including microchannels containing electrophoretic separation matrices; valves to control fluid movement; on-chip pumps such as electroosmotic, electrohydrodynamic, or electrokinetic pumps; thermal modules (including devices for both heating and/or cooling); and detection systems, as is more fully described below. The devices of the invention can be configured to manipulate one or multiple samples or analytes.

In general, the devices of the invention comprise solid supports of ceramic materials, fabricated by sintering together green sheet layers that include particles of ceramics, glass, and mixtures. The green sheets can be shaped and textured in a wide variety of ways to give rise to holes, ridges and channels. When several green sheets are sintered together, the resulting monolithic structure has any

number of wells and microchannels to allow the movement of fluids containing target analytes and/or reagents, for use with a wide variety of different assays and detection methods. In addition, a number of other components can be added, such as thermal modules to allow for heating and/or cooling of the samples. Thermal modules find particular use in nucleic acid reactions including the polymerase chain reaction (PCR), and the devices of the invention allow for both single and highly parallel reactions, wherein each reaction can be individually controlled. See generally U.S.S.N.s 09/460,281, filed December 9, 1999; 09/460,283, filed December 9, 1999; 09/458,534, filed December 9, 1999; and 09/466,325, filed December 17, 1999, all of which are expressly incorporated by reference in their entirety.

These microfluidic devices are configured in a variety of ways, including the use of an array of wells with individual thermal modules for performing parallel reactions. The devices can also include detection modules comprising biochips, which are arrays of capture binding ligands such as nucleic acid probes for the detection of target analytes. In some embodiments, devices are provided that can perform biological reactions on a substrate surface that uses a low volume of sample fluid, accommodates substrates as large as or larger than a conventional microscope slide, accommodates a plurality of independent reactions, and accommodates a substrate surface having one or more hydrogel-based microarrays attached thereto. The invention further provides an apparatus that allows introduction of fluids in addition to sample fluid into each reaction chamber via standard pipet tips and associated pipettor apparatus. The invention further provides an apparatus that increases reaction reproducibility, increases reaction efficiency, and reduces reaction duration.

The microfluidic devices of the invention are used to detect target analytes in samples. By "target analyte" or "analyte" or grammatical equivalents herein is meant any molecule, compound or particle to be detected. As outlined below, target analytes preferably bind to binding ligands, as is more fully described above. As will be appreciated by those in the art, a large number of analytes may be detected using the present methods; basically, any target analyte for which a binding ligand, described herein, may be made may be detected using the methods of the invention.

Suitable analytes include organic and inorganic molecules, including biomolecules. In a preferred embodiment, the analyte may be an environmental pollutant (including pesticides, insecticides, toxins, etc.); a chemical (including solvents, polymers, organic materials, etc.); therapeutic molecules (including therapeutic and abused drugs, antibiotics, etc.); biomolecules (including hormones, cytokines, proteins, lipids, carbohydrates, cellular membrane antigens and receptors (neural, hormonal, nutrient, and cell surface receptors) or their ligands, etc); whole cells (including procaryotic (such as pathogenic bacteria) and eukaryotic cells, including mammalian tumor cells); viruses

(including retroviruses, herpesviruses, adenoviruses, lentiviruses, etc.); and spores; etc. Particularly preferred analytes are environmental pollutants; nucleic acids; proteins (including enzymes, antibodies, antigens, growth factors, cytokines, etc); therapeutic and abused drugs; cells; and viruses.

In a preferred embodiment, the target analyte is a nucleic acid. By "nucleic acid" or "oligonucleotide" or grammatical equivalents herein means at least two nucleotides covalently linked together. A nucleic acid of the present invention will generally contain phosphodiester bonds, although in some cases, as outlined below, nucleic acid analogs are included that may have alternate backbones, comprising, for example, phosphoramide (Beaucage et al., Tetrahedron 49(10):1925 (1993) and references therein; Letsinger, J. Org. Chem. 35:3800 (1970); Sprinzl et al., Eur. J. Biochem. 81:579 (1977); Letsinger et al., Nucl. Acids Res. 14:3487 (1986); Sawai et al, Chem. Lett. 805 (1984), Letsinger et al., J. Am. Chem. Soc. 110:4470 (1988); and Pauwels et al., Chemica Scripta 26:141 91986)), phosphorothioate (Mag et al., Nucleic Acids Res. 19:1437 (1991); and U.S. Patent No. 5,644,048), phosphorodithioate (Briu et al., J. Am. Chem. Soc. 111:2321 (1989), O-methylphophoroamidite linkages (see Eckstein, Oligonucleotides and Analogues: A Practical Approach, Oxford University Press), and peptide nucleic acid backbones and linkages (see Egholm, J. Am. Chem. Soc. 114:1895 (1992); Meier et al., Chem. Int. Ed. Engl. 31:1008 (1992); Nielsen, Nature, 365:566 (1993); Carlsson et al., Nature 380:207 (1996), all of which are incorporated by reference). Other analog nucleic acids include those with positive backbones (Denpcy et al., Proc. Natl. Acad. Sci. USA 92:6097 (1995); non-ionic backbones (U.S. Patent Nos. 5,386,023, 5,637,684, 5,602,240, 5,216,141 and 4,469,863; Kiedrowshi et al., Angew. Chem. Intl. Ed. English 30:423 (1991); Letsinger et al., J. Am. Chem. Soc. 110:4470 (1988); Letsinger et al., Nucleoside & Nucleotide 13:1597 (1994); Chapters 2 and 3, ASC Symposium Series 580, "Carbohydrate Modifications in Antisense Research", Ed. Y.S. Sanghui and P. Dan Cook; Mesmaeker et al., Bioorganic & Medicinal Chem. Lett. 4:395 (1994); Jeffs et al., J. Biomolecular NMR 34:17 (1994); Tetrahedron Lett. 37:743 (1996)) and non-ribose backbones, including those described in U.S. Patent Nos. 5,235,033 and 5,034,506, and Chapters 6 and 7, ASC Symposium Series 580, "Carbohydrate Modifications in Antisense Research", Ed. Y.S. Sanghui and P. Dan Cook. Nucleic acids containing one or more carbocyclic sugars are also included within the definition of nucleic acids (see Jenkins et al., Chem. Soc. Rev. (1995) pp169-176). Several nucleic acid analogs are described in Rawls, C & E News June 2, 1997 page 35. Nucleic acid analogs also include "locked nucleic acids". All of these references are hereby expressly incorporated by reference. These modifications of the ribose-phosphate backbone may be done to facilitate the addition of electron transfer moieties, or to increase the stability and half-life of such molecules in physiological environments.

As will be appreciated by those in the art, all of these nucleic acid analogs may find use in the present invention. In addition, mixtures of naturally occurring nucleic acids and analogs can be made; for example, at the site of conductive oligomer or electron transfer moiety attachment, an analog structure may be used. Alternatively, mixtures of different nucleic acid analogs, and mixtures of naturally occurring nucleic acids and analogs may be made.

As outlined herein, the nucleic acids may be single stranded or double stranded, as specified, or contain portions of both double stranded or single stranded sequence. The nucleic acid may be DNA, both genomic and cDNA, RNA or a hybrid, where the nucleic acid contains any combination of deoxyribo- and ribo-nucleotides, and any combination of bases, including uracil, adenine, thymine, cytosine, guanine, inosine, xathanine hypoxathanine, isocytosine, isoguanine, etc. As used herein, the term "nucleoside" includes nucleotides and nucleoside and nucleotide analogs, and modified nucleosides such as amino modified nucleosides. In addition, "nucleoside" includes non-naturally occuring analog structures. Thus for example the individual units of a peptide nucleic acid, each containing a base, are referred to herein as nucleosides.

In a preferred embodiment, the present invention provides methods of detecting target nucleic acids. By "target nucleic acid" or "target sequence" or grammatical equivalents herein means a nucleic acid sequence on a single strand of nucleic acid. The target sequence may be a portion of a gene, a regulatory sequence, genomic DNA, cDNA, RNA including mRNA and rRNA, or others. It may be any length, with the understanding that longer sequences are more specific. In some embodiments, it may be desirable to fragment or cleave the sample nucleic acid into fragments of 100 to 10,000 basepairs, with fragments of roughly 500 basepairs being preferred in some embodiments. As will be appreciated by those in the art, the complementary target sequence may take many forms. For example, it may be contained within a larger nucleic acid sequence, i.e. all or part of a gene or mRNA, a restriction fragment of a plasmid or genomic DNA, among others.

As is outlined more fully below, probes (including primers) are made to hybridize to target sequences to determine the presence or absence of the target sequence in a sample. Generally speaking, this term will be understood by those skilled in the art.

The target sequence may also be comprised of different target domains, which may be adjacent (i.e. contiguous) or separated. For example, when ligation chain reaction (LCR) techniques are used, a first primer may hybridize to a first target domain and a second primer may hybridize to a second target domain; either the domains are adjacent, or they may be separated by one or more nucleotides, coupled with the use of a polymerase and dNTPs, as is more fully outlined below. The terms "first"

and "second" are not meant to confer an orientation of the sequences with respect to the 5'-3' orientation of the target sequence. For example, assuming a 5'-3' orientation of the complementary target sequence, the first target domain may be located either 5' to the second domain, or 3' to the second domain.

In a preferred embodiment, the target analyte is a protein. As will be appreciated by those in the art, there are a large number of possible proteinaceous target analytes that may be detected using the present invention. By "proteins" or grammatical equivalents herein is meant proteins, oligopeptides and peptides, derivatives and analogs, including proteins containing non-naturally occurring amino acids and amino acid analogs, and peptidomimetic structures. The side chains may be in either the (R) or the (S) configuration. In a preferred embodiment, the amino acids are in the (S) or L-configuration. As discussed below, when the protein is used as a binding ligand, it may be desirable to utilize protein analogs to retard degradation by sample contaminants.

Suitable protein target analytes include, but are not limited to, (1) immunoglobulins, particularly IgEs, IgGs and IgMs, and particularly therapeutically or diagnostically relevant antibodies, including but not limited to, for example, antibodies to human albumin, apolipoproteins (including apolipoprotein E), human chorionic gonadotropin, cortisol, α-fetoprotein, thyroxin, thyroid stimulating hormone (TSH), antithrombin, antibodies to pharmaceuticals (including antieptileptic drugs (phenytoin, primidone, carbariezepin, ethosuximide, valproic acid, and phenobarbitol), cardioactive drugs (digoxin, lidocaine, procainamide, and disopyramide), bronchodilators (theophylline), antibiotics (chloramphenicol, sulfonamides), antidepressants, immunosuppresants, abused drugs (amphetamine, methamphetamine, cannabinoids, cocaine and opiates) and antibodies to any number of viruses (including orthomyxoviruses, (e.g. influenza virus), paramyxoviruses (e.g respiratory syncytial virus, mumps virus, measles virus), adenoviruses, rhinoviruses, coronaviruses, reoviruses, togaviruses (e.g. rubella virus), parvoviruses, poxviruses (e.g. variola virus, vaccinia virus), enteroviruses (e.g. poliovirus, coxsackievirus), hepatitis viruses (including A, B and C), herpesviruses (e.g. Herpes simplex virus, varicella-zoster virus, cytomegalovirus, Epstein-Barr virus), rotaviruses, Norwalk viruses, hantavirus, arenavirus, rhabdovirus (e.g. rabies virus), retroviruses (including HIV, HTLV-I and -II), papovaviruses (e.g. papillomavirus), polyomaviruses, and picornaviruses, and the like), and bacteria (including a wide variety of pathogenic and non-pathogenic prokaryotes of interest including Bacillus; Vibrio, e.g. *V. cholerae;* Escherichia, e.g. Enterotoxigenic *E. coli*, Shigella, e.g. *S. dysenteriae;* Salmonella, e.g. *S. typhi;* Mycobacterium e.g. *M. tuberculosis, M. leprae*; Clostridium, e.g. *C. botulinum, C. tetani, C. difficile, C.perfringens*; Cornyebacterium, e.g. *C. diphtheriae*; Streptococcus, *S. pyogenes, S. pneumoniae;* Staphylococcus, *e.g. S. aureus*; Haemophilus, e.g. *H. influenzae*; Neisseria, e.g. *N. meningitidis, N. gonorrhoeae*; Yersinia, e.g. *G. lambliaY. pestis,*

Pseudomonas, e.g. *P. aeruginosa, P. putida*; Chlamydia, e.g. *C. trachomatis*; Bordetella, e.g. *B. pertussis;* Treponema, e.g. *T. palladium;* and the like); (2) enzymes (and other proteins), including but not limited to, enzymes used as indicators of or treatment for heart disease, including creatine kinase, lactate dehydrogenase, aspartate amino transferase, troponin T, myoglobin, fibrinogen, cholesterol, triglycerides, thrombin, tissue plasminogen activator (tPA); pancreatic disease indicators including amylase, lipase, chymotrypsin and trypsin; liver function enzymes and proteins including cholinesterase, bilirubin, and alkaline phosphotase; aldolase, prostatic acid phosphatase, terminal deoxynucleotidyl transferase, and bacterial and viral enzymes such as HIV protease; (3) hormones and cytokines (many of which serve as ligands for cellular receptors) such as erythropoietin (EPO), thrombopoietin (TPO), the interleukins (including IL-1 through IL-17), insulin, insulin-like growth factors (including IGF-1 and -2), epidermal growth factor (EGF), transforming growth factors (including TGF-α and TGF-β), human growth hormone, transferrin, epidermal growth factor (EGF), low density lipoprotein, high density lipoprotein, leptin, VEGF, PDGF, ciliary neurotrophic factor, prolactin, adrenocorticotropic hormone (ACTH), calcitonin, human chorionic gonadotropin, cotrisol, estradiol, follicle stimulating hormone (FSH), thyroid-stimulating hormone (TSH), leutinzing hormone (LH), progeterone and testosterone; and (4) other proteins (including α-fetoprotein, carcinoembryonic antigen CEA, cancer markers, etc.).

In addition, any of the biomolecules for which antibodies may be detected may be detected directly as well; that is, detection of virus or bacterial cells, therapeutic and abused drugs, etc., may be done directly.

Suitable target analytes include carbohydrates, including but not limited to, markers for breast cancer (CA15-3, CA 549, CA 27.29), mucin-like carcinoma associated antigen (MCA), ovarian cancer (CA125), pancreatic cancer (DE-PAN-2), prostate cancer (PSA), CEA, and colorectal and pancreatic cancer (CA 19, CA 50, CA242).

Suitable target analytes include metal ions, particularly heavy and/or toxic metals, including but not limited to, aluminum, arsenic, cadmium, selenium, cobalt, copper, chromium, lead, silver and nickel.

These target analytes may be present in any number of different sample types, including, but not limited to, bodily fluids including blood, lymph, saliva, vaginal and anal secretions, urine, feces, perspiration and tears, and solid tissues, including liver, spleen, bone marrow, lung, muscle, brain, etc.

Accordingly, the present invention provides microfluidic devices for the detection of target analytes comprising a solid substrate. The solid substrate can be made of a wide variety of materials and can be configured in a large number of ways, as is discussed herein and will be apparent to one of skill in the art. In addition, a single device may be comprises of more than one substrate; for example, there may be a "sample treatment" cassette that interfaces with a separate "detection" cassette; a raw sample is added to the sample treatment cassette and is manipulated to prepare the sample for detection, which is removed from the sample treatment cassette and added to the detection cassette. There may be an additional functional cassette into which the device fits; for example, a heating element which is placed in contact with the sample cassette to effect reactions such as PCR. In some cases, a portion of the substrate may be removable; for example, the sample cassette may have a detachable detection cassette, such that the entire sample cassette is not contacted with the detection apparatus. See for example U.S. Patent No. 5,603,351 and PCT US96/17116, hereby incorporated by reference.

The composition of the solid substrate will depend on a variety of factors, including the techniques used to create the device, the use of the device, the composition of the sample, the analyte to be detected, the size of the wells and microchannels, the presence or absence of electronic components, etc. Generally, the devices of the invention should be easily sterilizable as well.

In a preferred embodiment, the solid substrate can be made from a wide variety of materials. Preferred embodiments utilize ceramic components as the solid substrate, as is more generally outlined below, although as will be appreciated by those in the art, the devices of the invention may include other materials. These include, but are not limited to, silicon such as silicon wafers, silcon dioxide, silicon nitride, glass and fused silica, gallium arsenide, indium phosphide, aluminum, ceramics, polyimide, quartz, plastics, resins and polymers including polymethylmethacrylate, acrylics, polyethylene, polyethylene terepthalate, polycarbonate, polystyrene and other styrene copolymers, polypropylene, polytetrafluoroethylene, superalloys, zircaloy, steel, gold, silver, copper, tungsten, molybdeumn, tantalum, KOVAR, KEVLAR, KAPTON, MYLAR, brass, sapphire, etc. High quality glasses such as high melting borosilicate or fused silicas may be preferred for their UV transmission properties when any of the sample manipulation steps require light based technologies. In addition, as outlined herein, portions of the internal surfaces of the device may be coated with a variety of coatings as needed, to reduce non-specific binding, to allow the attachment of binding ligands, for biocompatibility, for flow resistance, etc.

In a preferred embodiment, the solid support comprises ceramic materials, such as are outlined in U.S.S.N.s 09/235,081; 09/337,086; 09/464,490; 09/492,013; 09/466,325; 09/460,281; 09/460,283;

09/387,691; 09/438,600; 09/506,178; and 09/458,534; all of which are expressly incorporated by reference in their entirety. In this embodiment, the devices are made from layers of green-sheet that have been laminated and sintered together to form a substantially monolithic structure. Green-sheet is a composite material that includes inorganic particles of glass, glass-ceramic, ceramic, or mixtures thereof, dispersed in a polymer binder, and may also include additives such as plasticizers and dispersants. The green-sheet is preferably in the form of sheets that are 50 to 250 microns thick. The ceramic particles are typically metal oxides, such as aluminum oxide or zirconium oxide. An example of such a green-sheet that includes glass-ceramic particles is "AX951" that is sold by E.I. Du Pont de Nemours and Company. An example of a green-sheet that includes aluminum oxide particles is "Ferro Alumina" that is sold by Ferro Corp. The composition of the green-sheet may also be custom formulated to meet particular applications. The green-sheet layers are laminated together and then fired to form a substantially monolithic multilayered structure. The manufacturing, processing, and applications of ceramic green-sheets are described generally in Richard E. Mistler, "Tape Casting: The Basic Process for Meeting the Needs of the Electronics Industry," Ceramic Bulletin, vol. 69, no. 6, pp. 1022-26 (1990), and in U.S. Patent No. 3,991,029, which are incorporated herein by reference.

The method for fabricating devices (such as those depicted in Figures 27-30 as devices 100 and 200) begins with providing sheets of green-sheet that are preferably 50 to 250 microns thick. The sheets of green-sheet are cut to the desired size, typically 6 inches by 6 inches for conventional processing, although smaller or larger devices may be used as needed. Each green-sheet layer may then be textured using various techniques to form desired structures, such as vias, channels, or cavities, in the finished multilayered structure.

Various techniques may be used to texture a green-sheet layer. For example, portions of a green-sheet layer may be punched out to form vias or channels. This operation may be accomplished using conventional multilayer ceramic punches, such as the Pacific Trinetics Corp. Model APS-8718 Automated Punch System. Instead of punching out part of the material, features, such as channels and wells may be embossed into the surface of the green-sheet by pressing the green-sheet against an embossing plate that has a negative image of the desired structure. Texturing may also be accomplished by laser tooling with a laser via system, such as the Pacific Trinetics LVS-3012.

Next, a wide variety of materials may be applied, preferably in the form of thick-film pastes, to each textured green-sheet layer. For example, electrically conductive pathways may be provided by depositing metal-containing thick-film pastes onto the green-sheet layers. Thick-film pastes typically include the desired material, which may be either a metal or a dielectric, in the form of a powder dispersed in an organic vehicle, and the pastes are designed to have the viscosity appropriate for the

desired deposition technique, such as screen-printing. The organic vehicle may include resins, solvents, surfactants, and flow-control agents. The thick-film paste may also include a small amount of a flux, such as a glass frit, to facilitate sintering. Thick-film technology is further described in J.D. Provance, "Performance Review of Thick Film Materials," *Insulation/Circuits* (April, 1977) and in Morton L. Topfer, *Thick Film Microelectronics, Fabrication, Design, and Applications* (1977), pp. 41-59, which are incorporated herein by reference.

The porosity of the resulting thick-film can be adjusted by adjusting the amount of organic vehicle present in the thick-film paste. Specifically, the porosity of the thick-film can be increased by increased the percentage of organic vehicle in the thick-film paste. Similarly, the porosity of a green-sheet layer can be increased by increasing the proportion of organic binder. Another way of increasing porosity in thick-films and green-sheet layers is to disperse within the organic vehicle, or the organic binder, another organic phase that is not soluble in the organic vehicle. Polymer microspheres can be used advantageously for this purpose.

To add electrically conductive pathways, the thick film pastes typically include metal particles, such as silver, platinum, palladium, gold, copper, tungsten, nickel, tin, or alloys thereof. Silver pastes are preferred. Examples of suitable silver pastes are silver conductor composition numbers 7025 and 7713 sold by E.I. Du Pont de Nemours and Company.

The thick-film pastes are preferably applied to a green-sheet layer by screen-printing. In the screen-printing process, the thick-film paste is forced through a patterned silk screen so as to be deposited onto the green-sheet layer in a corresponding pattern. Typically, the silk screen pattern is created photographically by exposure to a mask. In this way, conductive traces may be applied to a surface of a green-sheet layer. Vias present in the green-sheet layer may also be filled with thick-film pastes. If filled with thick-filled pastes containing electrically conductive materials, the vias can serve to provide electrical connections between layers.

After the desired structures are formed in each layer of green-sheet, preferably a layer of adhesive is applied to either surface of the green-sheet. Preferably, the adhesive is a room-temperature adhesive. Such room-temperature adhesives have glass transition temperatures below room temperature, *i.*e., below about 20° C, so that they can bind substrates together at room temperature. Moreover, rather than undergoing a chemical change or chemically reacting with or dissolving components of the substrates, such room-temperature adhesives bind substrates together by penetrating into the surfaces of the substrates. Sometimes such room-temperature adhesives are referred to as "pressure-sensitive adhesives." Suitable room-temperature adhesives are typically

supplied as water-based emulsions and are available from Rohm and Haas, Inc. and from Air Products, Inc. For example, a material sold by Air Products, Inc. as "Flexcryl 1653" has been found to work well.

The room-temperature adhesive may be applied to the green-sheet by conventional coating techniques. To facilitate coating, it is often desirable to dilute the supplied pressure-sensitive adhesive in water, depending on the coating technique used and on the viscosity and solids loading of the starting material. After coating, the room-temperature adhesive is allowed to dry. The dried thickness of the film of room-temperature adhesive is preferably in the range of 1 to 10 microns, and the thickness should be uniform over the entire surface of the green-sheet. Film thicknesses that exceed 15 microns are undesirable. With such thick films of adhesive voiding or delamination can occur during firing, due to the large quantity of organic material that must be removed. Films that are less than about 0.5 microns thick when dried are too thin because they provide insufficient adhesion between the layers.

From among conventional coating techniques, spin-coating and spraying are the preferred methods. If spin-coating is used, it is preferable to add 1 gram of deionized water for every 10 grams of "Flexcryl 1653." If spraying is used, a higher dilution level is preferred to facilitate ease of spraying. Additionally, when room-temperature adhesive is sprayed on, it is preferable to hold the green-sheet at an elevated temperature, e.g., about 60 to 70° C, so that the material dries nearly instantaneously as it is deposited onto the green-sheet. The instantaneous drying results in a more uniform and homogeneous film of adhesive.

After the room-temperature adhesive has been applied to the green-sheet layers, the layers are stacked together to form a multilayered green-sheet structure. Preferably, the layers are stacked in an alignment die, so as to maintain the desired registration between the structures of each layer. When an alignment die is used, alignment holes must be added to each green-sheet layer.
Typically, the stacking process alone is sufficient to bind the green-sheet layers together when a room-temperature adhesive is used. In other words, little or no pressure is required to bind the layers together. However, in order to effect a more secure binding of the layers, the layers are preferably laminated together after they are stacked.

The lamination process involves the application of pressure to the stacked layers. For example, in the conventional lamination process, a uniaxial pressure of about 1000 to 1500 psi is applied to the stacked green-sheet layers that is then followed by an application of an isostatic pressure of about 3000 to 5000 psi for about 10 to 15 minutes at an elevated temperature, such as 70° C. Adhesives do

not need to be applied to bind the green-sheet layers together when the conventional lamination process is used.

However, pressures less than 2500 psi are preferable in order to achieve good control over the dimensions of such structures as internal or external cavities and channels. Even lower pressures are more desirable to allow the formation of larger structures, such as cavities and channels. For example, if a lamination pressure of 2500 psi is used, the size of well-formed internal cavities and channels is typically limited to no larger than roughly 20 microns. Accordingly, pressures less than 1000 psi are more preferred, as such pressures generally enable structures having sizes greater than about 100 microns to be formed with some measure of dimensional control. Pressures of less than 300 psi are even more preferred, as such pressures typically allow structures with sizes greater than 250 microns to be formed with some degree of dimensional control. Pressures less than 100 psi, which are referred to herein as "near-zero pressures," are most preferred, because at such pressures few limits exist on the size of internal and external cavities and channels that can be formed in the multilayered structure.

The pressure is preferably applied in the lamination process by means of a uniaxial press.

Alternatively, pressures less than about 100 psi may be applied by hand.

As with semiconductor device fabrication, many devices may be present on each sheet.

Accordingly, after lamination the multilayered structure may be diced using conventional green-sheet dicing or sawing apparatus to separate the individual devices. The high level of peel and shear resistance provided by the room-temperature adhesive results in the occurrence of very little edge delamination during the dicing process. If some layers become separated around the edges after dicing, the layers may be easily re-laminated by applying pressure to the affected edges by hand, without adversely affecting the rest of the device.

The final processing step is firing to convert the laminated multilayered green-sheet structure from its "green" state to form the finished, substantially monolithic, multilayered structure. The firing process occurs in two important stages as the temperature is raised. The first important stage is the binder burnout stage that occurs in the temperature range of about 250 to 500° C, during which the other organic materials, such as the binder in the green-sheet layers and the organic components in any applied thick-film pastes, are removed from the structure.

In the next important stage, the sintering stage, which occurs at a higher temperature, the inorganic particles sinter together so that the multilayered structure is densified and becomes substantially monolithic. The sintering temperature used depends on the nature of the inorganic particles present in the green-sheet. For many types of ceramics, appropriate sintering temperatures range from about 950 to about 1600° C, depending on the material. For example, for green-sheet containing aluminum oxide, sintering temperatures between 1400 and 1600° C are typical. Other ceramic materials, such as silicon nitride, aluminum nitride, and silicon carbide, require higher sintering temperatures, namely 1700 to 2200° C. For green-sheet with glass-ceramic particles, a sintering temperature in the range of 750 to 950° C is typical. Glass particles generally require sintering temperatures in the range of only about 350 to 700° C. Finally, metal particles may require sintering temperatures anywhere from 550 to 1700° C, depending on the metal.

Typically, the devices are fired for a period of about 4 hours to about 12 hours or more, depending on the material used. Generally, the firing should be of a sufficient duration so as to remove the organic materials from the structure and to completely sinter the inorganic particles. In particular, polymers are present as a binder in the green-sheet and in the room-temperature adhesive. The firing should be of sufficient temperature and duration to decompose these polymers and to allow for their removal from the multilayered structure.

Typically, the multilayered structure undergoes a reduction in volume during the firing process. During the binder burnout phase, a small volume reduction of about 0.5 to 1.5% is normally observed. At higher temperatures, during the sintering stage, a further volume reduction of about 14 to 17% is typically observed.

The volume change due to firing, on the other hand, can be controlled. In particular, to match volume changes in two materials, such as green-sheet and thick-film paste, one should match: (1) the particle sizes; and (2) the percentage of organic components, such as binders, which are removed during the firing process. Additionally, volume changes need not be matched exactly, but any mismatch will typically result in internal stresses in the device. But symmetrical processing, placing the identical material or structure on opposite sides of the device can, to some extent, compensate for shrinkage mismatched materials. Too great a mismatch in either sintering temperatures or volume changes may result in defects in or failure of some or all of the device. For example, the device may separate into its individual layers, or it may become warped or distorted.

As noted above, preferably any dissimilar materials added to the green-sheet layers are co-fired with them. Such dissimilar materials could be added as thick-film pastes or as other green-sheet layers, or

added later in the fabrication process, after sintering. The benefit of co-firing is that the added materials are sintered to the green-sheet layers and become integral to the substantially monolithic microfluidic device. However, to be co-fireable, the added materials should have sintering temperatures and volume changes due to firing that are matched with those of the green-sheet layers. Sintering temperatures are largely material-dependent, so that matching sintering temperatures simply requires proper selection of materials. For example, although silver is the preferred metal for providing electrically conductive pathways, if the green-sheet layers contain alumina particles, which require a sintering temperature in the range of 1400 to 1600° C, some other metal, such as platinum, must be used due to the relatively low melting point of silver (961° C).

Alternatively, the addition of other substrates or joining of two post-sintered pieces can be done using any variety of adhesive techniques, including those outlined herein. For example, two "halves" of a device can be glued or fused together. For example, a particular detection platform, reagent mixture such as a hydrogel or biological components that are not stable at high temperature can be sandwiched in between the two halves. Alternatively, ceramic devices comprising open channels or wells can be made, additional substrates or materials placed into the devices, and then they may be sealed with other materials.

Thus, in addition to the ceramics components of the devices, there may be additional components of other materials as outlined herein. These components can be made in a variety of ways, as will be appreciated by those in the art. See for example WO96/39260, directed to the formation of fluid-tight electrical conduits; U.S. Patent No. 5,747,169, directed to sealing; EP 0637996 B1; EP 0637998 B1; WO96/39260; WO97/16835; WO98/13683; WO97/16561; WO97/43629; WO96/39252; WO96/15576; WO96/15450; WO97/37755; and WO97/27324; and U.S. Patent Nos. 5,304,487; 5,071531; 5,061,336; 5,747,169; 5,296,375; 5,110,745; 5,587,128; 5,498,392; 5,643,738; 5,750,015; 5,726,026; 5,35,358; 5,126,022; 5,770,029; 5,631,337; 5,569,364; 5,135,627; 5,632,876; 5,593,838; 5,585,069; 5,637,469; 5,486,335; 5,755,942; 5,681,484; and 5,603,351, all of which are hereby incorporated by reference. Suitable fabrication techniques again will depend on the choice of substrate or component, but preferred methods include, but are not limited to, a variety of micromachining and microfabrication techniques, including film deposition processes such as spin coating, chemical vapor deposition, laser fabrication, photolithographic and other etching techniques using either wet chemical processes or plasma processes, embossing, injection molding and bonding techniques (see U.S. Patent No. 5,747,169, hereby incorporated by reference). In addition, there are printing techniques for the creation of desired fluid guiding pathways; that is, patterns of printed material can permit directional fluid transport. Thus, the build-up of "ink" can serve to define a flow channel. In addition, the use of different "inks" or "pastes" can allow different portions of the pathways having different flow properties.

For example, materials can be used to change solute/solvent RF values (the ratio of the distance moved by a particular solute to that moved by a solvent front). For example, printed fluid guiding pathways can be manufactured with a printed layer or layers comprised of two different materials, providing different rates of fluid transport. Multi-material fluid guiding pathways can be used when it is desirable to modify retention times of reagents in fluid guiding pathways. Furthermore, printed fluid guiding pathways can also provide regions containing reagent substances, by including the reagents in the "inks" or by a subsequent printing step. See for example U.S. Patent No. 5,795,453, herein incorporated by reference in its entirety.

In a preferred embodiment, the solid substrate is configured for handling a single sample that may contain a plurality of target analytes. That is, a single sample is added to the device and the sample may either be aliquoted for parallel processing for detection of the analytes or the sample may be processed serially, with individual targets being detected in a serial fashion. In addition, samples may be removed periodically or from different locations for in line sampling.

In a preferred embodiment, the solid substrate is configured for handling multiple samples, each of which may contain one or more target analytes. In general, in this embodiment, each sample is handled individually; that is, the manipulations and analyses are done in parallel, with preferably no contact or contamination between them. Alternatively, there may be some steps in common; for example, it may be desirable to process different samples separately but detect all of the target analytes on a single detection platform.

In addition, it should be understood that while most of the discussion herein is directed to the use of generally planar substrates with microchannels and wells, other geometries can be used as well. For example, two or more planar substrates can be stacked to produce a three dimensional device, that can contain microchannels flowing within one plane or between planes; similarly, wells may span two or more substrates to allow for larger sample volumes. Thus for example, both sides of a substrate can be etched to contain microchannels; see for example U.S. Patent Nos. 5,603,351 and 5,681,484, both of which are hereby incorporated by reference.

Thus, the devices of the invention include at least one microchannel or flow channel (sometimes referred to herein as "vias") that allows the flow of sample from the sample inlet port to the other components or modules of the system. The collection of microchannels and wells is sometimes referred to in the art as a "mesoscale flow system". As will be appreciated by those in the art, the flow channels may be configured in a wide variety of ways, depending on the use of the channel. For example, a single flow channel starting at the sample inlet port may be separated into a variety of

smaller channels, such that the original sample is divided into discrete subsamples for parallel processing or analysis. Alternatively, several flow channels from different modules, for example the sample inlet port and a reagent storage module may feed together into a mixing chamber or a reaction chamber. As will be appreciated by those in the art, there are a large number of possible configurations; what is important is that the flow channels allow the movement of sample and reagents from one part of the device to another. For example, the path lengths of the flow channels may be altered as needed; for example, when mixing and timed reactions are required, longer and sometimes tortuous flow channels can be used.

In general, the microfluidic devices of the invention are generally referred to as "mesoscale" devices. The devices herein are typically designed on a scale suitable to analyze microvolumes, although in some embodiments large samples (e.g. cc's of sample) may be reduced in the device to a small volume for subsequent analysis. That is, "mesoscale" as used herein refers to chambers and microchannels that have cross-sectional dimensions on the order of 0.1 μm to 500 μm. The mesoscale flow channels and wells have preferred depths on the order of 0.1 μm to 100 μm, typically 2-50 μm. The channels have preferred widths on the order of 2.0 to 500 μm, more preferably 3-100 μm. For many applications, channels of 5-50 μm are useful. However, for many applications, larger dimensions on the scale of millimeters may be used; for example, in ceramic applications, typical vias have diameters ranging from 100 to 500 microns. Vias may also be filled with other materials, such as metallic pastes containing metal particles, such as silver, platinum, gold, copper, tungsten, nickel, tin, or alloys thereof. Preferably the metallic paste is silver.

Similarly, chambers (sometimes also referred to herein as "wells") in the substrates often will have larger dimensions, on the scale of a few millimeters. The well structures of the microarray of the present invention can have volumes ranging from 1 to 25 mL, and may be configured as, for example, cylinders, rectangles, or squares, or any other convenient or useful cross-sectional shape. Similarly, they may be irregularly shaped; they may be wider at the top, etc. In one embodiment of the present invention, the well structures have a volume of about 2 mL and are configured as cylinders. Suitable well structures may have a number of different dimensions that would permit reactions of between 1 and 25 mL to be performed therein. In preferred embodiments of the microarray of the present invention, the well structures have depths of between 1 and 10 mm and diameters of between 0.5 and 5 mm. In one embodiment, the well structures have a depth of 2 mm and a diameter of 1.2 mm. In an alternative embodiment, well structures have a depth of 2.5 mm and a diameter of 1 mm (Fig. 10). In embodiments relying on thermal modules, the flow of heat will determine the most favorable dimensions for the well structures, and the dimensions will vary with the materials used for the fabrication of the integral heating and cooling components.

In addition to the flow channel system, the devices of the invention are configured to include one or more of a variety of components, herein referred to as "modules", that will be present on any given device depending on its use. These modules include, but are not limited to: sample inlet ports; sample introduction or collection modules; cell handling modules (for example, for cell lysis, cell removal, cell concentration, cell separation or capture, cell growth, etc.); separation modules, for example, for electrophoresis, dielectrophoresis, gel filtration, ion exchange/affinity chromatography (capture and release) etc.; reaction modules for chemical or biological alteration of the sample, including amplification of the target analyte (for example, when the target analyte is nucleic acid, amplification techniques are useful, including, but not limited to polymerase chain reaction (PCR), ligase chain reaction (LCR), strand displacement amplification (SDA), and nucleic acid sequence based amplification (NASBA)), chemical, physical or enzymatic cleavage or alteration of the target analyte, or chemical modification of the target; fluid pumps; fluid valves; thermal modules for heating and cooling (which may be part of other modules, such as reaction modules); storage modules for assay reagents; mixing chambers; and detection modules. In particular, the present invention provides for thermal modules which allow for heating and/or cooling of the samples.

In a preferred embodiment, the devices of the invention include at least one sample inlet port for the introduction of the sample to the device. This may be part of or separate from a sample introduction or collection module; that is, the sample may be directly fed in from the sample inlet port to a separation chamber, or it may be pretreated in a sample collection well or chamber.

In a preferred embodiment, the devices of the invention include a sample collection module, which can be used to concentrate or enrich the sample if required; for example, see U.S. Patent No. 5,770,029, including the discussion of enrichment channels and enrichment means.

In a preferred embodiment, the devices of the invention include a cell handling module. This is of particular use when the sample comprises cells that either contain the target analyte or that must be removed in order to detect the target analyte. Thus, for example, the detection of particular antibodies in blood can require the removal of the blood cells for efficient analysis, or the cells (and/or nucleus) must be lysed prior to detection. In this context, "cells" include eukaryotic and prokaryotic cells, and viral particles that may require treatment prior to analysis, such as the release of nucleic acid from a viral particle prior to detection of target sequences. In addition, cell handling modules may also utilize a downstream means for determining the presence or absence of cells. Suitable cell handling modules include, but are not limited to, cell lysis modules, cell removal modules, cell concentration modules, and cell separation or capture modules. In addition, as for all the modules of the invention,

the cell handling module is in fluid communication via a flow channel with at least one other module of the invention.

In a preferred embodiment, the cell handling module includes a cell lysis module. As is known in the art, cells may be lysed in a variety of ways, depending on the cell type. In one embodiment, as described in EP 0 637 998 B1 and U.S. Patent No. 5,635,358, hereby incorporated by reference, the cell lysis module may comprise cell membrane piercing protrusions that extend from a surface of the cell handling module. As fluid is forced through the device, the cells are ruptured. Similarly, this may be accomplished using sharp edged particles trapped within the cell handling region. Alternatively, the cell lysis module can comprise a region of restricted cross-sectional dimension, which results in cell lysis upon pressure.

In a preferred embodiment, the cell lysis module comprises a cell lysing agent, such as guanidium chloride, chaotropic salts, enzymes such as lysozymes, etc. In some embodiments, for example for blood cells, a simple dilution with water or buffer can result in hypotonic lysis. The lysis agent may be solution form, stored within the cell lysis module or in a storage module and pumped into the lysis module. Alternatively, the lysis agent may be in solid form, that is taken up in solution upon introduction of the sample.

The cell lysis module may also include, either internally or externally, a filtering module for the removal of cellular debris as needed. This filter may be microfabricated between the cell lysis module and the subsequent module to enable the removal of the lysed cell membrane and other cellular debris components; examples of suitable filters are shown in EP 0 637 998 B1, incorporated by reference.

In a preferred embodiment, the cell handling module includes a cell separation or capture module. This embodiment utilizes a cell capture region comprising binding sites capable of reversibly binding a cell surface molecule to enable the selective isolation (or removal) of a particular type of cell from the sample population, for example, white blood cells for the analysis of chromosomal nucleic acid, or subsets of white blood cells. These binding moieties may be immobilized either on the surface of the module or on a particle trapped within the module (i.e. a bead) by physical absorption or by covalent attachment. Suitable binding moieties will depend on the cell type to be isolated or removed, and generally includes antibodies and other binding ligands, such as ligands for cell surface receptors, etc. Thus, a particular cell type may be removed from a sample prior to further handling, or the assay is designed to specifically bind the desired cell type, wash away the non-desirable cell types, followed by either release of the bound cells by the addition of reagents or solvents, physical removal (i.e. higher flow rates or pressures), or even in situ lysis.

Alternatively, a cellular "sieve" can be used to separate cells on the basis of size. This can be done in a variety of ways, including protrusions from the surface that allow size exclusion, a series of narrowing channels, a weir, or a diafiltration type setup.

In a preferred embodiment, the cell handling module includes a cell removal module. This may be used when the sample contains cells that are not required in the assay or are undesirable. Generally, cell removal will be done on the basis of size exclusion as for "sieving", above, with channels exiting the cell handling module that are too small for the cells.

In a preferred embodiment, the cell handling module includes a cell concentration module. As will be appreciated by those in the art, this is done using "sieving" methods, for example to concentrate the cells from a large volume of sample fluid prior to lysis.

In a preferred embodiment, the devices of the invention include a separation module. Separation in this context means that at least one component of the sample is separated from other components of the sample. This can comprise the separation or isolation of the target analyte, or the removal of contaminants that interfere with the analysis of the target analyte, depending on the assay.

In a preferred embodiment, the separation module includes chromatographic-type separation media such as absorptive phase materials, including, but not limited to reverse phase materials (e.g. C_8 or C_{18} coated particles, etc.), ion-exchange materials, affinity chromatography materials such as binding ligands, etc. See U.S. Patent No. 5,770,029, herein incorporated by reference.

In a preferred embodiment, the separation module utilizes binding ligands, as is generally outlined herein for cell separation or analyte detection. In this embodiment, binding ligands are immobilized (again, either by physical absorption or covalent attachment, described below) within the separation module (again, either on the internal surface of the module, on a particle such as a bead, filament or capillary trapped within the module, for example through the use of a frit). Suitable binding moieties will depend on the sample component to be isolated or removed. By "binding ligand" or grammatical equivalents herein is meant a compound that is used to bind a component of the sample, either a contaminant (for removal) or the target analyte (for enrichment). In some embodiments, as outlined below, the binding ligand is used to probe for the presence of the target analyte, and that will bind to the analyte.

As will be appreciated by those in the art, the composition of the binding ligand will depend on the sample component to be separated. Binding ligands for a wide variety of analytes are known or can

be readily found using known techniques. For example, when the component is a protein, the binding ligands include proteins (particularly including antibodies or fragments thereof (FAbs, etc.)) or small molecules. When the sample component is a metal ion, the binding ligand generally comprises traditional metal ion ligands or chelators. Preferred binding ligand proteins include peptides. For example, when the component is an enzyme, suitable binding ligands include substrates and inhibitors. Antigen-antibody pairs, receptor-ligands, and carbohydrates and their binding partners are also suitable component-binding ligand pairs. The binding ligand may be nucleic acid, when nucleic acid binding proteins are the targets; alternatively, as is generally described in U.S. Patents 5,270,163, 5,475,096, 5,567,588, 5,595,877, 5,637,459, 5,683,867,5,705,337, and related patents, hereby incorporated by reference, nucleic acid "aptomers" can be developed for binding to virtually any target analyte. Similarly, there is a wide body of literature relating to the development of binding partners based on combinatorial chemistry methods. In this embodiment, when the binding ligand is a nucleic acid, preferred compositions and techniques are outlined in PCT US97/20014, hereby incorporated by reference.

In a preferred embodiment, the binding of the sample component to the binding ligand is specific, and the binding ligand is part of a binding pair. By "specifically bind" herein is meant that the ligand binds the component, for example the target analyte, with specificity sufficient to differentiate between the analyte and other components or contaminants of the test sample. The binding should be sufficient to remain bound under the conditions of the separation step or assay, including wash steps to remove non-specific binding. In some embodiments, for example in the detection of certain biomolecules, the disassociation constants of the analyte to the binding ligand will be less than about 10^{-4}-10^{-6} M^{-1}, with less than about 10^{-5} to 10^{-9} M^{-1} being preferred and less than about 10^{-7} -10^{-9} M^{-1} being particularly preferred.

As will be appreciated by those in the art, the composition of the binding ligand will depend on the composition of the target analyte. Binding ligands to a wide variety of analytes are known or can be readily found using known techniques. For example, when the analyte is a single-stranded nucleic acid, the binding ligand is generally a substantially complementary nucleic acid. Similarly the analyte may be a nucleic acid binding protein and the capture binding ligand is either a single-stranded or double-stranded nucleic acid; alternatively, the binding ligand may be a nucleic acid binding protein when the analyte is a single or double-stranded nucleic acid. When the analyte is a protein, the binding ligands include proteins or small molecules. Preferred binding ligand proteins include peptides. For example, when the analyte is an enzyme, suitable binding ligands include substrates, inhibitors, and other proteins that bind the enzyme, i.e. components of a multi-enzyme (or protein) complex. As will be appreciated by those in the art, any two molecules that will associate, preferably

specifically, may be used, either as the analyte or the binding ligand. Suitable analyte/binding ligand pairs include, but are not limited to, antibodies/antigens, receptors/ligand, proteins/nucleic acids; nucleic acids/nucleic acids, enzymes/substrates and/or inhibitors, carbohydrates (including glycoproteins and glycolipids)/lectins, carbohydrates and other binding partners, proteins/proteins; and protein/small molecules. These may be wild-type or derivative sequences. In a preferred embodiment, the binding ligands are portions (particularly the extracellular portions) of cell surface receptors that are known to multimerize, such as the growth hormone receptor, glucose transporters (particularly GLUT4 receptor), transferrin receptor, epidermal growth factor receptor, low density lipoprotein receptor, high density lipoprotein receptor, leptin receptor, interleukin receptors including IL-1, IL-2, IL-3, IL-4, IL-5, IL-6, IL-7, IL-8, IL-9, IL-11, IL-12, IL-13, IL-15 and IL-17 receptors, VEGF receptor, PDGF receptor, EPO receptor, TPO receptor, ciliary neurotrophic factor receptor, prolactin receptor, and T-cell receptors.

When the sample component bound by the binding ligand is the target analyte, it may be released for detection purposes if necessary, using any number of known techniques, depending on the strength of the binding interaction, including changes in pH, salt concentration, temperature, etc. or the addition of competing ligands, detergents, chaotropic agents, organic compounds, or solvents, etc.

In some embodiments, preferential binding of molecules to surfaces can be achieved using coating agents or buffer conditions; for example, DNA and RNA may be differentially bound to glass surfaces depending on the conditions.

In a preferred embodiment, the separation module includes an electrophoresis module, as is generally described in U.S. Patent Nos. 5,770,029; 5,126,022; 5,631,337; 5,569,364; 5,750,015, and 5,135,627, all of which are hereby incorporated by reference. In electrophoresis, molecules are primarily separated by different electrophoretic mobilities caused by their different molecular size, shape and/or charge. Microcapillary tubes have recently been used for use in microcapillary gel electrophoresis (high performance capillary electrophoresis (HPCE)). One advantage of HPCE is that the heat resulting from the applied electric field is efficiently disappated due to the high surface area, thus allowing fast separation. The electrophoresis module serves to separate sample components by the application of an electric field, with the movement of the sample components being due either to their charge or, depending on the surface chemistry of the microchannel, bulk fluid flow as a result of electroosmotic flow (EOF).

As will be appreciated by those in the art, the electrophoresis module can take on a variety of forms, and generally comprises an electrophoretic microchannel and associated electrodes to apply an

electric field to the electrophoretic microchannel. Waste fluid outlets and fluid reservoirs are present as required.

The electrodes comprise pairs of electrodes, either a single pair, or, as described in U.S. Patent Nos. 5,126,022 and 5,750,015, a plurality of pairs. Single pairs generally have one electrode at each end of the electrophoretic pathway. Multiple electrode pairs may be used to precisely control the movement of sample components, such that the sample components may be continuously subjected to a plurality of electric fields either simultaneously or sequentially.

In a preferred embodiment, electrophoretic gel media may also be used. By varying the pore size of the media, employing two or more gel media of different porosity, and/or providing a pore size gradient, separation of sample components can be maximized. Gel media for separation based on size are known, and include, but are not limited to, polyacrylamide and agarose. One preferred electrophoretic separation matrix is described in U.S. Patent No. 5,135,627, hereby incorporated by reference, that describes the use of "mosaic matrix", formed by polymerizing a dispersion of microdomains ("dispersoids") and a polymeric matrix. This allows enhanced separation of target analytes, particularly nucleic acids. Similarly, U.S. Patent No. 5,569,364, hereby incorporated by reference, describes separation media for electrophoresis comprising submicron to above-micron sized cross-linked gel particles that find use in microfluidic systems. U.S. Patent No. 5,631,337, hereby incorporated by reference, describes the use of thermoreversible hydrogels comprising polyacrylamide backbones with N-substituents that serve to provide hydrogen bonding groups for improved electrophoretic separation. See also U.S. Patent Nos. 5,061,336 and 5,071,531, directed to methods of casting gels in capillary tubes.

In a preferred embodiment, the devices of the invention include a reaction module. This can include either physical, chemical or biological alteration of one or more sample components. Alternatively, it may include a reaction module wherein the target analyte alters a second moiety that can then be detected; for example, if the target analyte is an enzyme, the reaction chamber may comprise an enzyme substrate that upon modification by the target analyte, can then be detected. In this embodiment, the reaction module may contain the necessary reagents, or they may be stored in a storage module and pumped as outlined herein to the reaction module as needed.

In a preferred embodiment, the reaction module includes a chamber for the chemical modification of all or part of the sample. For example, chemical cleavage of sample components (CNBr cleavage of proteins, etc.) or chemical cross-linking can be done. PCT US97/07880, hereby incorporated by reference, lists a large number of possible chemical reactions that can be done in the devices of the

invention, including amide formation, acylation, alkylation, reductive amination, Mitsunobu, Diels Alder and Mannich reactions, Suzuki and Stille coupling, chemical labeling, etc. Similarly, U.S. Patent Nos. 5,616,464 and 5,767,259 describe a variation of LCR that utilizes a "chemical ligation" of sorts. In this embodiment, similar to LCR, a pair of primers are utilized, wherein the first primer is substantially complementary to a first domain of the target and the second primer is substantially complementary to an adjacent second domain of the target (although, as for LCR, if a "gap" exists, a polymerase and dNTPs may be added to "fill in" the gap). Each primer has a portion that acts as a "side chain" that does not bind the target sequence and acts as one half of a stem structure that interacts non-covalently through hydrogen bonding, salt bridges, van der Waal's forces, etc. Preferred embodiments utilize substantially complementary nucleic acids as the side chains. Thus, upon hybridization of the primers to the target sequence, the side chains of the primers are brought into spatial proximity, and, if the side chains comprise nucleic acids as well, can also form side chain hybridization complexes. At least one of the side chains of the primers comprises an activatable cross-linking agent, generally covalently attached to the side chain, that upon activation, results in a chemical cross-link or chemical ligation. The activatible group may comprise any moiety that will allow cross-linking of the side chains, and include groups activated chemically, photonically and thermally, with photoactivatable groups being preferred. In some embodiments a single activatable group on one of the side chains is enough to result in cross-linking via interaction to a functional group on the other side chain; in alternate embodiments, activatable groups are required on each side chain. In addition, the reaction chamber may contain chemical moieties for the protection or deprotection of certain functional groups, such as thiols or amines.

In a preferred embodiment, the reaction module includes a chamber for the biological alteration of all or part of the sample. For example, enzymatic processes including nucleic acid amplification, hydrolysis of sample components or the hydrolysis of substrates by a target enzyme, the addition or removal of detectable labels, the addition or removal of phosphate groups, etc.

In a preferred embodiment, the target analyte is a nucleic acid and the biological reaction chamber allows amplification of the target nucleic acid. Suitable amplification techniques include, both target amplification and probe amplification, including, but not limited to, polymerase chain reaction (PCR), ligase chain reaction (LCR), strand displacement amplification (SDA), self-sustained sequence replication (3SR), QB replicase amplification (QBR), repair chain reaction (RCR), cycling probe technology or reaction (CPT or CPR), and nucleic acid sequence based amplification (NASBA). In this embodiment, the reaction reagents generally comprise at least one enzyme (generally polymerase), primers, and nucleoside triphosphates as needed.

General techniques for nucleic acid amplification are discussed below. In most cases, double stranded target nucleic acids are denatured to render them single stranded so as to permit hybridization of the primers and other probes of the invention. A preferred embodiment utilizes a thermal step, generally by raising the temperature of the reaction to about 95°C, although pH changes and other techniques such as the use of extra probes or nucleic acid binding proteins may also be used. Thus, as more fully described below, the reaction chambers of the invention can include thermal modules.

A probe nucleic acid (also referred to herein as a primer nucleic acid) is then contacted to the target sequence to form a hybridization complex. By "primer nucleic acid" herein is meant a probe nucleic acid that will hybridize to some portion, i.e. a domain, of the target sequence. Probes of the present invention are designed to be complementary to a target sequence (either the target sequence of the sample or to other probe sequences, as is described below), such that hybridization of the target sequence and the probes of the present invention occurs. As outlined below, this complementarity need not be perfect; there may be any number of base pair mismatches which will interfere with hybridization between the target sequence and the single stranded nucleic acids of the present invention. However, if the number of mutations is so great that no hybridization can occur under even the least stringent of hybridization conditions, the sequence is not a complementary target sequence. Thus, by "substantially complementary" herein is meant that the probes are sufficiently complementary to the target sequences to hybridize under normal reaction conditions.

A variety of hybridization conditions may be used in the present invention, including high, moderate and low stringency conditions; see for example Maniatis et al., Molecular Cloning: A Laboratory Manual, 2d Edition, 1989, and Short Protocols in Molecular Biology, ed. Ausubel, et al, hereby incorporated by reference. Stringent conditions are sequence-dependent and will be different in different circumstances. Longer sequences hybridize specifically at higher temperatures. An extensive guide to the hybridization of nucleic acids is found in Tijssen, Techniques in Biochemistry and Molecular Biology--Hybridization with Nucleic Acid Probes, "Overview of principles of hybridization and the strategy of nucleic acid assays" (1993). Generally, stringent conditions are selected to be about 5-10°C lower than the thermal melting point (Tm) for the specific sequence at a defined ionic strength pH. The Tm is the temperature (under defined ionic strength, pH and nucleic acid concentration) at which 50% of the probes complementary to the target hybridize to the target sequence at equilibrium (as the target sequences are present in excess, at Tm, 50% of the probes are occupied at equilibrium). Stringent conditions will be those in which the salt concentration is less than about 1.0 sodium ion, typically about 0.01 to 1.0 M sodium ion concentration (or other salts) at pH 7.0 to 8.3 and the temperature is at least about 30°C for short probes (e.g. 10 to 50 nucleotides) and at

least about 60°C for long probes (e.g. greater than 50 nucleotides). Stringent conditions may also be achieved with the addition of destabilizing agents such as formamide. The hybridization conditions may also vary when a non-ionic backbone, i.e. PNA is used, as is known in the art. In addition, cross-linking agents may be added after target binding to cross-link, i.e. covalently attach, the two strands of the hybridization complex.

Thus, the assays are generally run under stringency conditions which allows formation of the hybridization complex only in the presence of target. Stringency can be controlled by altering a step parameter that is a thermodynamic variable, including, but not limited to, temperature, formamide concentration, salt concentration, chaotropic salt concentration pH, organic solvent concentration, etc.

These parameters may also be used to control non-specific binding, as is generally outlined in U.S. Patent No. 5,681,697. Thus it may be desirable to perform certain steps at higher stringency conditions to reduce non-specific binding.

The size of the primer nucleic acid may vary, as will be appreciated by those in the art, in general varying from 5 to 500 nucleotides in length, with primers of between 10 and 100 being preferred, between 15 and 50 being particularly preferred, and from 10 to 35 being especially preferred, depending on the use and amplification technique.

In addition, the different amplification techniques may have further requirements of the primers, as is more fully described below.

Once the hybridization complex between the primer and the target sequence has been formed, an enzyme, sometimes termed an "amplification enzyme", is used to modify the primer. As for all the methods outlined herein, the enzymes may be added at any point during the assay, either prior to, during, or after the addition of the primers. The identification of the enzyme will depend on the amplification technique used, as is more fully outlined below. Similarly, the modification will depend on the amplification technique, as outlined below, although generally the first step of all the reactions herein is an extension of the primer, that is, nucleotides are added to the primer to extend its length.

Once the enzyme has modified the primer to form a modified primer, the hybridization complex is disassociated. Generally, the amplification steps are repeated for a period of time to allow a number of cycles, depending on the number of copies of the original target sequence and the sensitivity of detection, with cycles ranging from 1 to thousands, with from 10 to 100 cycles being preferred and from 20 to 50 cycles being especially preferred.

After a suitable time or amplification, the modified primer can be moved to a detection module and detected.

In a preferred embodiment, the amplification is target amplification. Target amplification involves the amplification (replication) of the target sequence to be detected, such that the number of copies of the target sequence is increased. Suitable target amplification techniques include, but are not limited to, the polymerase chain reaction (PCR), strand displacement amplification (SDA), and nucleic acid sequence based amplification (NASBA).

In a preferred embodiment, the target amplification technique is PCR. The polymerase chain reaction (PCR) is widely used and described, and involve the use of primer extension combined with thermal cycling to amplify a target sequence; see U.S. Patent Nos. 4,683,195 and 4,683,202, and PCR Essential Data, J. W. Wiley & sons, Ed. C.R. Newton, 1995, all of which are incorporated by reference. In addition, there are a number of variations of PCR which also find use in the invention, including "quantitative competitive PCR" or "QC-PCR", "arbitrarily primed PCR" or "AP-PCR" , "immuno-PCR", "Alu-PCR", "PCR single strand conformational polymorphism" or "PCR-SSCP", "reverse transcriptase PCR" or "RT-PCR", "biotin capture PCR", "vectorette PCR". "panhandle PCR", and "PCR select cDNA subtration", among others. In one embodiment, the amplification technique is not PCR.

In general, PCR may be briefly described as follows. A double stranded target nucleic acid is denatured, generally by raising the temperature, and then cooled in the presence of an excess of a PCR primer, which then hybridizes to the first target strand. A DNA polymerase then acts to extend the primer, resulting in the synthesis of a new strand forming a hybridization complex. The sample is then heated again, to disassociate the hybridization complex, and the process is repeated. By using a second PCR primer for the complementary target strand, rapid and exponential amplification occurs. Thus PCR steps are denaturation, annealing and extension. The particulars of PCR are well known, and include the use of a thermostabile polymerase such as Taq I polymerase and thermal cycling.

Accordingly, the PCR reaction requires at least one PCR primer and a polymerase.

In a preferred embodiment, the target amplification technique is SDA. Strand displacement amplification (SDA) is generally described in Walker et al., in Molecular Methods for Virus Detection, Academic Press, Inc., 1995, and U.S. Patent Nos. 5,455,166 and 5,130,238, all of which are hereby expressly incorporated by reference in their entirety.

In general, SDA may be described as follows. A single stranded target nucleic acid, usually a DNA target sequence, is contacted with an SDA primer. An "SDA primer" generally has a length of 25-100 nucleotides, with SDA primers of approximately 35 nucleotides being preferred. An SDA primer is substantially complementary to a region at the 3' end of the target sequence, and the primer has a sequence at its 5' end (outside of the region that is complementary to the target) that is a recognition sequence for a restriction endonuclease, sometimes referred to herein as a "nicking enzyme" or a "nicking endonuclease", as outlined below. The SDA primer then hybridizes to the target sequence. The SDA reaction mixture also contains a polymerase (an "SDA polymerase", as outlined below) and a mixture of all four deoxynucleoside-triphosphates (also called deoxynucleotides or dNTPs, i.e. dATP, dTTP, dCTP and dGTP), at least one species of which is a substituted or modified dNTP; thus, the SDA primer is modified, i.e. extended, to form a modified primer, sometimes referred to herein as a "newly synthesized strand". The substituted dNTP is modified such that it will inhibit cleavage in the strand containing the substituted dNTP but will not inhibit cleavage on the other strand. Examples of suitable substituted dNTPs include, but are not limited, 2'deoxyadenosine 5'-O-(1-thiotriphosphate), 5-methyldeoxycytidine 5'-triphosphate, 2'-deoxyuridine 5'-triphosphate, adn 7-deaza-2'-deoxyguanosine 5'-triphosphate. In addition, the substitution of the dNTP may occur after incorporation into a newly synthesized strand; for example, a methylase may be used to add methyl groups to the synthesized strand. In addition, if all the nucleotides are substituted, the polymerase may have 5'→3' exonuclease activity. However, if less than all the nucleotides are substituted, the polymerase preferably lacks 5'→3' exonuclease activity.

As will be appreciated by those in the art, the recognition site/endonuclease pair can be any of a wide variety of known combinations. The endonuclease is chosen to cleave a strand either at the recognition site, or either 3' or 5' to it, without cleaving the complementary sequence, either because the enzyme only cleaves one strand or because of the incorporation of the substituted nucleotides. Suitable recognition site/endonuclease pairs are well known in the art; suitable endonucleases include, but are not limited to, HincII, HindII, AvaI, Fnu4HI, TthIII, NciI, BstXI, BamI, etc. A chart depicting suitable enzymes, and their corresponding recognition sites and the modified dNTP to use is found in U.S. Patent No. 5,455,166, hereby expressly incorporated by reference.

Once nicked, a polymerase (an "SDA polymerase") is used to extend the newly nicked strand, 5'→3', thereby creating another newly synthesized strand. The polymerase chosen should be able to intiate 5'→3' polymerization at a nick site, should also displace the polymerized strand downstream from the nick, and should lack 5'→3' exonuclease activity (this may be additionally accomplished by the addition of a blocking agent). Thus, suitable polymerases in SDA include, but are not limited to, the Klenow

fragment of DNA polymerase I, SEQUENASE 1.0 and SEQUENASE 2.0 (U.S. Biochemical), T5 DNA polymerase and Phi29 DNA polymerase.

Accordingly, the SDA reaction requires, in no particular order, an SDA primer, an SDA polymerase, a nicking endonuclease, and dNTPs, at least one species of which is modified.

In general, SDA does not require thermocycling. The temperature of the reaction is generally set to be high enough to prevent non-specific hybridization but low enough to allow specific hybridization; this is generally from about 37°C to about 42°C, depending on the enzymes.

In a preferred embodiment, as for most of the amplification techniques described herein, a second amplification reaction can be done using the complementary target sequence, resulting in a substantial increase in amplification during a set period of time. That is, a second primer nucleic acid is hybridized to a second target sequence, that is substantially complementary to the first target sequence, to form a second hybridization complex. The addition of the enzyme, followed by disassociation of the second hybridization complex, results in the generation of a number of newly synthesized second strands.

In a preferred embodiment, the target amplification technique is nucleic acid sequence based amplification (NASBA). NASBA is generally described in U.S. Patent No. 5,409,818; Sooknanan et al., Nucleic Acid Sequence-Based Amplification, Ch. 12 (pp. 261-285) of Molecular Methods for Virus Detection, Academic Press, 1995; and "Profiting from Gene-based Diagnostics", CTB International Publishing Inc., N.J., 1996, all of which are incorporated by reference. NASBA is very similar to both TMA and QBR. Transcription mediated amplification (TMA) is generally described in U.S. Patent Nos. 5,399,491, 5,888,779, 5,705,365, 5,710,029, all of which are incorporated by reference. The main difference between NASBA and TMA is that NASBA utilizes the addition of RNAse H to effect RNA degradation, and TMA relies on inherent RNAse H activity of the reverse transcriptase.

In general, these techniques may be described as follows. A single stranded target nucleic acid, usually an RNA target sequence (sometimes referred to herein as "the first target sequence" or "the first template"), is contacted with a first primer, generally referred to herein as a "NASBA primer" (although "TMA primer" is also suitable). Starting with a DNA target sequence is described below. These primers generally have a length of 25-100 nucleotides, with NASBA primers of approximately 50-75 nucleotides being preferred. The first primer is preferably a DNA primer that has at its 3' end a sequence that is substantially complementary to the 3' end of the first template. The first primer also has an RNA polymerase promoter at its 5' end (or its complement (antisense), depending on the

configuration of the system). The first primer is then hybridized to the first template to form a first hybridization complex. The reaction mixture also includes a reverse transcriptase enzyme (an "NASBA reverse transcriptase") and a mixture of the four dNTPs, such that the first NASBA primer is modified, i.e. extended, to form a modified first primer, comprising a hybridization complex of RNA (the first template) and DNA (the newly synthesized strand).

By "reverse transcriptase" or "RNA-directed DNA polymerase" herein is meant an enzyme capable of synthesizing DNA from a DNA primer and an RNA template. Suitable RNA-directed DNA polymerases include, but are not limited to, avian myloblastosis virus reverse transcriptase ("AMV RT") and the Moloney murine leukemia virus RT. When the amplification reaction is TMA, the reverse transcriptase enzyme further comprises a RNA degrading activity as outlined below.

In addition to the components listed above, the NASBA reaction also includes an RNA degrading enzyme, also sometimes referred to herein as a ribonuclease, that will hydrolyze RNA of an RNA:DNA hybrid without hydrolyzing single- or double-stranded RNA or DNA. Suitable ribonucleases include, but are not limited to, RNase H from *E. coli* and calf thymus.

The ribonuclease activity degrades the first RNA template in the hybridization complex, resulting in a disassociation of the hybridization complex leaving a first single stranded newly synthesized DNA strand, sometimes referred to herein as "the second template".

In addition, the NASBA reaction also includes a second NASBA primer, generally comprising DNA (although as for all the probes herein, including primers, nucleic acid analogs may also be used). This second NASBA primer has a sequence at its 3' end that is substantially complementary to the 3' end of the second template, and also contains an antisense sequence for a functional promoter and the antisense sequence of a transcription initiation site. Thus, this primer sequence, when used as a template for synthesis of the third DNA template, contains sufficient information to allow specific and efficient binding of an RNA polymerase and initiation of transcription at the desired site. Preferred embodiments utilizes the antisense promoter and transcription initiation site are that of the T7 RNA polymerase, although other RNA polymerase promoters and initiation sites can be used as well, as outlined below.

The second primer hybridizes to the second template, and a DNA polymerase, also termed a "DNA-directed DNA polymerase", also present in the reaction, synthesizes a third template (a second newly synthesized DNA strand), resulting in second hybridization complex comprising two newly synthesized DNA strands.

Finally, the inclusion of an RNA polymerase and the required four ribonucleoside triphosphates (ribonucleotides or NTPs) results in the synthesis of an RNA strand (a third newly synthesized strand that is essentially the same as the first template). The RNA polymerase, sometimes referred to herein as a "DNA-directed RNA polymerase", recognizes the promoter and specifically initiates RNA synthesis at the initiation site. In addition, the RNA polymerase preferably synthesizes several copies of RNA per DNA duplex. Preferred RNA polymerases include, but are not limited to, T7 RNA polymerase, and other bacteriophage RNA polymerases including those of phage T3, phage ϕII, Salmonella phage sp6, or Pseudomonase phage gh-1.

In some embodiments, TMA and NASBA are used with starting DNA target sequences. In this embodiment, it is necessary to utilize the first primer comprising the RNA polymerase promoter and a DNA polymerase enzyme to generate a double stranded DNA hybrid with the newly synthesized strand comprising the promoter sequence. The hybrid is then denatured and the second primer added.

Accordingly, the NASBA reaction requires, in no particular order, a first NASBA primer, a second NASBA primer comprising an antisense sequence of an RNA polymerase promoter, an RNA polymerase that recognizes the promoter, a reverse transcriptase, a DNA polymerase, an RNA degrading enzyme, NTPs and dNTPs, in addition to the detection components outlined below.

These components result in a single starting RNA template generating a single DNA duplex; however, since this DNA duplex results in the creation of multiple RNA strands, which can then be used to initiate the reaction again, amplification proceeds rapidly.

Accordingly, the TMA reaction requires, in no particular order, a first TMA primer, a second TMA primer comprising an antisense sequence of an RNA polymerase promoter, an RNA polymerase that recognizes the promoter, a reverse transcriptase with RNA degrading activity, a DNA polymerase, NTPs and dNTPs, in addition to the detection components outlined below.

These components result in a single starting RNA template generating a single DNA duplex; however, since this DNA duplex results in the creation of multiple RNA strands, which can then be used to initiate the reaction again, amplification proceeds rapidly.

In a preferred embodiment, the amplification technique is signal amplification. Signal amplification involves the use of limited number of target molecules as templates to either generate multiple signalling probes or allow the use of multiple signalling probes. Signal amplification strategies include LCR, CPT, Invader™, and the use of amplification probes in sandwich assays.

In a preferred embodiment, the signal amplification technique is the oligonucleotide ligation assay (OLA), sometimes referred to as the ligation chain reaction (LCR). The method can be run in two different ways; in a first embodiment, only one strand of a target sequence is used as a template for ligation (OLA); alternatively, both strands may be used (OLA). See generally U.S. Patent Nos. 5,185,243 and 5,573,907; EP 0 320 308 B1; EP 0 336 731 B1; EP 0 439 182 B1; WO 90/01069; WO 89/12696; and WO 89/09835, and U.S.S.N.s 60/078,102 and 60/073,011, all of which are incorporated by reference.

In a preferred embodiment, the single-stranded target sequence comprises a first target domain and a second target domain, and a first LCR primer and a second LCR primer nucleic acids are added, that are substantially complementary to its respective target domain and thus will hybridize to the target domains. These target domains may be directly adjacent, i.e. contiguous, or separated by a number of nucleotides. If they are non-contiguous, nucleotides are added along with means to join nucleotides, such as a polymerase, that will add the nucleotides to one of the primers. The two LCR primers are then covalently attached, for example using a ligase enzyme such as is known in the art. This forms a first hybridization complex comprising the ligated probe and the target sequence. This hybridization complex is then denatured (disassociated), and the process is repeated to generate a pool of ligated probes.

In a preferred embodiment, LCR is done for two strands of a double-stranded target sequence. The target sequence is denatured, and two sets of probes are added: one set as outlined above for one strand of the target, and a separate set (i.e. third and fourth primer robe nucleic acids) for the other strand of the target. In a preferred embodiment, the first and third probes will hybridize, and the second and fourth probes will hybridize, such that amplification can occur. That is, when the first and second probes have been attached, the ligated probe can now be used as a template, in addition to the second target sequence, for the attachment of the third and fourth probes. Similarly, the ligated third and fourth probes will serve as a template for the attachment of the first and second probes, in addition to the first target strand. In this way, an exponential, rather than just a linear, amplification can occur.

A variation of LCR utilizes a "chemical ligation" of sorts, as is generally outlined in U.S. Patent Nos. 5,616,464 and 5,767,259, both of which are hereby expressly incorporated by reference in their entirety. In this embodiment, similar to LCR, a pair of primers are utilized, wherein the first primer is substantially complementary to a first domain of the target and the second primer is substantially complementary to an adjacent second domain of the target (although, as for LCR, if a "gap" exists, a polymerase and dNTPs may be added to "fill in" the gap). Each primer has a portion that acts as a

"side chain" that does not bind the target sequence and acts one half of a stem structure that interacts non-covalently through hydrogen bonding, salt bridges, van der Waal's forces, etc. Preferred embodiments utilize substantially complementary nucleic acids as the side chains. Thus, upon hybridization of the primers to the target sequence, the side chains of the primers are brought into spatial proximity, and, if the side chains comprise nucleic acids as well, can also form side chain hybridization complexes.

At least one of the side chains of the primers comprises an activatable cross-linking agent, generally covalently attached to the side chain, that upon activation, results in a chemical cross-link or chemical ligation. The activatible group may comprise any moiety that will allow cross-linking of the side chains, and include groups activated chemically, photonically and thermally, with photoactivatable groups being preferred. In some embodiments a single activatable group on one of the side chains is enough to result in cross-linking via interaction to a functional group on the other side chain; in alternate embodiments, activatable groups are required on each side chain.

Once the hybridization complex is formed, and the cross-linking agent has been activated such that the primers have been covalently attached, the reaction is subjected to conditions to allow for the disassocation of the hybridization complex, thus freeing up the target to serve as a template for the next ligation or cross-linking. In this way, signal amplification occurs, and can be detected as outlined herein.

In a preferred embodiment the signal amplification technique is RCA. Rolling-circle amplification is generally described in Baner *et al.* (1998) *Nuc. Acids Res.* 26:5073-5078; Barany, F. (1991) *Proc. Natl. Acad. Sci. USA* 88:189-193; Lizardi *et al.* (1998) *Nat. Genet.* 19:225-232; Zhang et al., Gene 211:277 (1998); and Daubendiek et al., Nature Biotech. 15:273 (1997); all of which are incorporated by reference in their entirety.

In general, RCA may be described as follows. First, as is outlined in more detail below, a single RCA probe is hybridized with a target nucleic acid. Each terminus of the probe hybridizes adjacently on the target nucleic acid (or alternatively, there are intervening nucleotides that can be "filled in" using a polymerase and dNTPs, as outlined below) and the OLA assay as described above occurs. When ligated, the probe is circularized while hybridized to the target nucleic acid. Addition of a primer, a polymerase and dNTPs results in extension of the circular probe. However, since the probe has no terminus, the polymerase continues to extend the probe repeatedly. Thus results in amplification of the circular probe. This very large concatamer can be detected intact, as described below, or can be cleaved in a variety of ways to form smaller amplicons for detection as outlined herein.

Accordingly, in an preferred embodiment, a single oligonucleotide is used both for OLA and as the circular template for RCA (referred to herein as a "padlock probe" or a "RCA probe"). That is, each terminus of the oligonucleotide contains sequence complementary to the target nucleic acid and functions as an OLA primer as described above. That is, the first end of the RCA probe is substantially complementary to a first target domain, and the second end of the RCA probe is substantially complementary to a second target domain, adjacent (either directly or indirectly, as outlined herein) to the first domain. Hybridization of the probe to the target nucleic acid results in the formation of a hybridization complex. Ligation of the "primers" (which are the discrete ends of a single oligonucleotide, the RCA probe) results in the formation of a modified hybridization complex containing a circular probe i.e. an RCA template complex. That is, the oligonucleotide is circularized while still hybridized with the target nucleic acid. This serves as a circular template for RCA. Addition of a primer, a polymerase and the required dNTPs to the RCA template complex results in the formation of an amplified product nucleic acid. Following RCA, the amplified product nucleic acid is detected as outlined herein. This can be accomplished in a variety of ways; for example, the polymerase may incorporate labeled nucleotides; a labeled primer may be used, or alternatively, a label probe is used that is substantially complementary to a portion of the RCA probe and comprises at least one label is used.

Accordingly, the present invention provides RCA probes (sometimes referred to herein as "rolling circle probes (RCPs) or "padlock probes" (PPs)). The RCPs may comprise any number of elements, including a first and second ligation sequence, a cleavage site, a priming site, a capture sequence, nucleotide analogs, and a label sequence.

In a preferred embodiment, the RCP comprises first and second ligation sequences. As outlined above for OLA, the ligation sequences are substantially complementary to adjacent domains of the target sequence. The domains may be directly adjacent (i.e. with no intervening bases between the 3' end of the first and the 5' of the second) or indirectly adjacent, with from 1 to 100 or more bases in between.

In a preferred embodiment, the RCPs comprise a cleavage site, such that either after or during the rolling circle amplification, the RCP concatamer may be cleaved into amplicons. In some embodiments, this facilitates the detection, since the amplicons are generally smaller and exhibit favorable hybridization kinetics on the surface. As will be appreciated by those in the art, the cleavage site can take on a number of forms, including, but not limited to, the use of restriction sites in the probe, the use of ribozyme sequences, or through the use or incorporation of nucleic acid cleavage moieties.

In a preferred embodiment, the padlock probe contains a restriction site. The restriction endonuclease site allows for cleavage of the long concatamers that are typically the result of RCA into smaller individual units that hybridize either more efficiently or faster to surface bound capture probes. Thus, following RCA (or in some cases, during the reaction), the product nucleic acid is contacted with the appropriate restriction endonuclease. This results in cleavage of the product nucleic acid into smaller fragments. The fragments are then hybridized with the capture probe that is immobilized resulting in a concentration of product fragments onto the detection electrode. Again, as outlined herein, these fragments can be detected in one of two ways: either labelled nucleotides are incorporated during the replication step, for example either as labeled individual dNTPs or through the use of a labeled primer, or an additional label probe is added.

In a preferred embodiment, the restriction site is a single-stranded restriction site chosen such that its complement occurs only once in the RCP.

In a preferred embodiment, the cleavage site is a ribozyme cleavage site as is generally described in Daubendiek et al., Nature Biotech. 15:273 (1997), hereby expressly incorporated by reference. In this embodiment, by using RCPs that encode catalytic RNAs, NTPs and an RNA polymerase, the resulting concatamer can self cleave, ultimately forming monomeric amplicons.

In a preferred embodiment, cleavage is accomplished using DNA cleavage reagents. For example, as is known in the art, there are a number of intercalating moieties that can effect cleavage, for example using light.

In a preferred embodiment, the RCPs do not comprise a cleavage site. Instead, the size of the RCP is designed such that it may hybridize "smoothly" to many capture probes on a surface. Alternatively, the reaction may be cycled such that very long concatamers are not formed.

In a preferred embodiment, the RCPs comprise a priming site, to allow the binding of a DNA polymerase primer. As is known in the art, many DNA polymerases require double stranded nucleic acid and a free terminus to allow nucleic acid synthesis. However, in some cases, for example when RNA polymerases are used, a primer may not be required (see Daubendiek, supra). Similarly, depending on the size and orientation of the target strand, it is possible that a free end of the target sequence can serve as the primer; see Baner et al., supra.

Thus, in a preferred embodiment, the padlock probe also contains a priming site for priming the RCA reaction. That is, each padlock probe comprises a sequence to which a primer nucleic acid hybridizes

forming a template for the polymerase. The primer can be found in any portion of the circular probe. In a preferred embodiment, the primer is located at a discrete site in the probe. In this embodiment, the primer site in each distinct padlock probe is identical, although this is not required. Advantages of using primer sites with identical sequences include the ability to use only a single primer oligonucleotide to prime the RCA assay with a plurality of different hybridization complexes. That is, the padlock probe hybridizes uniquely to the target nucleic acid to which it is designed. A single primer hybridizes to all of the unique hybridization complexes forming a priming site for the polymerase. RCA then proceeds from an identical locus within each unique padlock probe of the hybridization complexes.

In an alternative embodiment, the primer site can overlap, encompass, or reside within any of the above-described elements of the padlock probe. That is, the primer can be found, for example, overlapping or within the restriction site or the identifier sequence. In this embodiment, it is necessary that the primer nucleic acid is designed to base pair with the chosen primer site.

In a preferred embodiment, the primer may comprise the covalently attached ETMs.

In a preferred embodiment, the RCPs comprise a capture sequence. A capture sequence, as is outlined herein, is substantially complementary to a capture probe, as outlined herein.

In a preferred embodiment, the RCPs comprise a label sequence; i.e. a sequence that can be used to bind label probes and is substantially complementary to a label probe. In one embodiment, it is possible to use the same label sequence and label probe for all padlock probes on an array; alternatively, each padlock probe can have a different label sequence.

In a preferred embodiment, the RCP/primer sets are designed to allow an additional level of amplification, sometimes referred to as "hyperbranching" or "cascade amplification". As described in Zhang et al., supra, by using several priming sequences and primers, a first concatamer can serve as the template for additional concatamers. In this embodiment, a polymerase that has high displacement activity is preferably used. In this embodiment, a first antisense primer is used, followed by the use of sense primers, to generate large numbers of concatamers and amplicons, when cleavage is used.

Thus, the invention provides for methods of detecting using RCPs as described herein. Once the ligation sequences of the RCP have hybridized to the target, forming a first hybridization complex, the

ends of the RCP are ligated together as outlined above for OLA. The RCP primer is added, if necessary, along with a polymerase and dNTPs (or NTPs, if necessary).

The polymerase can be any polymerase as outlined herein, but is preferably one lacking 3' exonuclease activity (3' exo$^-$). Examples of suitable polymerase include but are not limited to exonuclease minus DNA Polymerase I large (Klenow) Fragment, Phi29 DNA polymerase, Taq DNA Polymerase and the like. In addition, in some embodiments, a polymerase that will replicate single-stranded DNA (i.e. without a primer forming a double stranded section) can be used.

Thus, in a preferred embodiment the OLA/RCA is performed in solution followed by restriction endonuclease cleavage of the RCA product. The cleaved product is then applied to an array as described herein. The incorporation of an endonuclease site allows the generation of short, easily hybridizable sequences. Furthermore, the unique capture sequence in each rolling circle padlock probe sequence allows diverse sets of nucleic acid sequences to be analyzed in parallel on an array, since each sequence is resolved on the basis of hybridization specificity.

In a preferred embodiment, the polymerase creates more than 100 copies of the circular DNA. In more preferred embodiments the polymerase creates more than 1000 copies of the circular DNA; while in a most preferred embodiment the polymerase creates more than 10,000 copies or more than 50,000 copies of the template.

The RCA as described herein finds use in allowing highly specific and highly sensitive detection of nucleic acid target sequences. In particular, the method finds use in improving the multiplexing ability of DNA arrays and eliminating costly sample or target preparation. As an example, a substantial savings in cost can be realized by directly analyzing genomic DNA on an array, rather than employing an intermediate PCR amplification step. The method finds use in examining genomic DNA and other samples including mRNA.

In addition the RCA finds use in allowing rolling circle amplification products to be easily detected by hybridization to probes in a solid-phase format. An additional advantage of the RCA is that it provides the capability of multiplex analysis so that large numbers of sequences can be analyzed in parallel. By combining the sensitivity of RCA and parallel detection on arrays, many sequences can be analyzed directly from genomic DNA.

In a preferred embodiment, the signal amplification technique is CPT. CPT technology is described in a number of patents and patent applications, including U.S. Patent Nos. 5,011,769, 5,403,711,

5,660,988, and 4,876,187, and PCT published applications WO 95/05480, WO 95/1416, and WO 95/00667, and U.S.S.N. 09/014,304, all of which are expressly incorporated by reference in their entirety.

Generally, CPT may be described as follows. A CPT primer (also sometimes referred to herein as a "scissile primer"), comprises two probe sequences separated by a scissile linkage. The CPT primer is substantially complementary to the target sequence and thus will hybridize to it to form a hybridization complex. The scissile linkage is cleaved, without cleaving the target sequence, resulting in the two probe sequences being separated. The two probe sequences can thus be more easily disassociated from the target, and the reaction can be repeated any number of times. The cleaved primer is then detected as outlined herein.

By "scissile linkage" herein is meant a linkage within the scissile probe that can be cleaved when the probe is part of a hybridization complex, that is, when a double-stranded complex is formed. It is important that the scissile linkage cleave only the scissile probe and not the sequence to which it is hybridized (i.e. either the target sequence or a probe sequence), such that the target sequence may be reused in the reaction for amplification of the signal. As used herein, the scissile linkage, is any connecting chemical structure which joins two probe sequences and which is capable of being selectively cleaved without cleavage of either the probe sequences or the sequence to which the scissile probe is hybridized. The scissile linkage may be a single bond, or a multiple unit sequence. As will be appreciated by those in the art, a number of possible scissile linkages may be used.

In a preferred embodiment, the scissile linkage comprises RNA. This system, previously described in as outlined above, is based on the fact that certain double-stranded nucleases, particularly ribonucleases, will nick or excise RNA nucleosides from a RNA:DNA hybridization complex. Of particular use in this embodiment is RNAseH, Exo III, and reverse transcriptase.

In one embodiment, the entire scissile probe is made of RNA, the nicking is facilitated especially when carried out with a double-stranded ribonuclease, such as RNAseH or Exo III. RNA probes made entirely of RNA sequences are particularly useful because first, they can be more easily produced enzymatically, and second, they have more cleavage sites which are accessible to nicking or cleaving by a nicking agent, such as the ribonucleases. Thus, scissile probes made entirely of RNA do not rely on a scissile linkage since the scissile linkage is inherent in the probe.

In a preferred embodiment, Invader™ technology is used. Invader™ technology is based on structure-specific polymerases that cleave nucleic acids in a site-specific manner. Two probes are

used: an "invader" probe and a "signaling" probe, that adjacently hybridize to a target sequence with a non-complementary overlap. The enzyme cleaves at the overlap due to its recognition of the "tail", and releases the "tail" . This can then be detected. The Invader™ technology is described in U.S. Patent Nos. 5,846,717; 5,614,402; 5,719,028; 5,541,311; and 5,843,669, all of which are hereby incorporated by reference.

Accordingly, the invention provides a first primer, sometimes referred to herein as an "invader primer", that hybridizes to a first domain of a target sequence, and a second primer, sometimes referred to herein as the signaling primer, that hybridizes to a second domain of the target sequence. The first and second target domains are adjacent. The signaling primer further comprises an overlap sequence, comprising at least one nucleotide, that is perfectly complementary to at least one nucleotide of the first target domain, and a non-complementary "tail" region. The cleavage enzyme recognizes the overlap structure and the noncomplementary tail, and cleaves the tail from the second primer. Suitable cleavage enzymes are described in the Patents outlined above, and include, but are not limited to, 5' thermostable nucleases from *Thermus* species, including *Thermus aquaticus, Thermus flavus* and *Thermus thermophilus*. The entire reaction is done isothermally at a temperature such that upon cleavage, the invader probe and the cleaved signaling probe come off the target stand, and new primers can bind. In this way large amounts of cleaved signaling probe (i.e. "tails") are made. The uncleaved signaling probes are removed (for example by binding to a solid support such as a bead, either on the basis of the sequence or through the use of a binding ligand attached to the portion of the signaling probe that hybridizes to the target). The cleaved signalling probes are then detected as outlined herein.

In this way, a number of target molecules are made. As is more fully outlined below, these reactions (that is, the products of these reactions) can be detected in a number of ways, as is generally outlined in U.S.S.N.s 09/458,553; 09/458,501; 09/572,187; 09/495,992; 09/344,217; WO00/31148; 09/439,889; 09/438,209; 09/344,620; PCTUS00/17422; 09/478,727, all of which are expressly incorporated by reference in their entirety.

In a preferred embodiment, detection proceeds through the use of labels. By "labeled" herein is meant that a compound has at least one element, isotope or chemical compound attached to enable the detection of the compound. In general, labels fall into three classes: a) isotopic labels, which may be radioactive or heavy isotopes; b) magnetic, electrical, thermal; and c) colored or luminescent dyes; although labels include enzymes and particles such as magnetic particles as well. Preferred labels include, but are not limited to, fluorescent lanthanide complexes, including those of Europium and Terbium, fluorescein, rhodamine, tetramethylrhodamine, eosin, erythrosin, coumarin, methyl-

coumarins, pyrene, Malacite green, stilbene, Lucifer Yellow, Cascade Blue™, Texas Red, 1,1'-[1,3-propanediylbis[(dimethylimino-3,1-propanediyl]]bis[4-[(3-methyl-2(3H)-benzoxazolylidene)methyl]]-,tetraioide, which is sold under the name YOYO-1, and others described in the 6th Edition of the Molecular Probes Handbook by Richard P. Haugland, hereby expressly incorporated by reference.

In some embodiments, fluorochromes or other labels are added to the newly synthesized strands, either by incorporating the labels into the primers, incorporating them using labeled dNTPs that are enzymatically incorporated into the newly synthesized strand, or through the use of other known methods, including the use of hybridization indicators. Hybridization indicators preferentially associate with double stranded nucleic acid, usually reversibly. Hybridization indicators include intercalators and minor and/or major groove binding moieties. In a preferred embodiment, intercalators may be used; since intercalation generally only occurs in the presence of double stranded nucleic acid, only in the presence of target hybridization will the label light up.

In a preferred embodiment, the signal amplification technique is a "sandwich" assay, as is generally described in U.S.S.N. 60/073,011 and in U.S. Patent Nos. 5,681,702, 5,597,909, 5,545,730, 5,594,117, 5,591,584, 5,571,670, 5,580,731, 5,571,670, 5,591,584, 5,624,802, 5,635,352, 5,594,118, 5,359,100, 5,124,246 and 5,681,697, all of which are hereby incorporated by reference. Although sandwich assays do not result in the alteration of primers, sandwich assays can be considered signal amplification techniques since multiple signals (i.e. label probes) are bound to a single target, resulting in the amplification of the signal. Sandwich assays are used when the target sequence does not comprise a label; that is, when a secondary probe, comprising labels, is used to generate the signal.

As discussed herein, it should be noted that the sandwich assays can be used for the detection of primary target sequences (e.g. from a patient sample), or as a method to detect the product of an amplification reaction as outlined above; thus for example, any of the newly synthesized strands outlined above, for example using PCR, LCR, NASBA, SDA, etc., may be used as the "target sequence" in a sandwich assay.

In a preferred embodiment, the reaction modules comprise a thermal module, although as will be recognized by those in the art, there may be embodiments that utilize thermal modules in the absence of reaction modules. Thermal modules can be either part of the reaction chamber or separate but can be brought into spatial proximity to the reaction module. The thermal module can include both heating and/or cooling capability. The thermal module may further comprise devices for monitoring the temperature of each well.

Suitable thermal modules are described in U.S. Patent Nos. 5,498,392 and 5,587,128, and WO 97/16561, incorporated by reference, and may comprise electrical resistance heaters, pulsed lasers or other sources of electromagnetic energy directed to the reaction chamber. It should also be noted that when heating elements are used, it may be desirable to have the reaction chamber be relatively shallow, to facilitate heat transfer; see U.S. Patent No. 5,587,128.

When the devices of the invention include thermal modules, preferred embodiments utilize microchip arrays fabricated to have low thermal conductivity in order to minimize thermal crosstalk between adjacent chambers on the microchip, which permits independent thermal control of each microchip component. In preferred embodiments, the microchip of the present invention is fabricated using ceramic multilayer technology (as disclosed herein, for example, as well as in co-owned and co-pending U.S. Serial Nos. 09/235,081 and 09/337,086, incorporated by reference herein). In additional preferred embodiments, the microchip array comprises air channels for thermally isolating microchip components. In still further preferred embodiments, the microchip array comprises thermal conducting material in thermal contact with each well on the microchip for removing heat therefrom and reducing thermal crosstalk between wells thereby. In some embodiments of the present invention, the biocompatibility of the ceramic material comprising the well structures may be enhanced by coating the microchip with a conformal compound such as parylene that reduces inhibition of the thermal molecular reactions within the ceramic wells.

Particularly preferred embodiments utilize microchips of the invention comprise one or a plurality of wells. Preferably, the microchip possesses an array of wells in which parallel, independently controlled molecular reactions can be controlled by temperature cycling as required. For example, the microchip array of the present invention can be used to perform parallel, independently controlled PCR reactions, ligase chain reactions, or DNA ligations, and others outlined herein. Most preferably, the apparatus of the invention can be used to determine the optimal reaction conditions for the PCR amplification of a particular nucleic acid sequence. Alternatively, the invention can be used to perform multiple reactions under more than one set of amplification conditions.

In certain embodiments, the temperature of the wells is increased using a thermal module comprising an integrated heater. In preferred embodiments, the integrated heater is a resistive heater, and more preferably a thick film resistive heater plate. Alternatively, the wells can be heated through the use of metal lines integrated beneath the well or surrounding sides of the wells, more preferably in a coil having one or more loops, in vertical or horizontal orientation. Parallel, variable heating of individual wells in a microchip array may be accomplished through the use of addressing schemes, preferably a

column-and-row or individual electrical addressing scheme, in order to independently control the heat output of the resistive heaters in the vicinity of each well.

In certain embodiments, the temperature of the wells is decreased using a thermal module comprising an integrated cooler. In preferred embodiments, the integrated cooler is a metal via at the bottom of each well. In further preferred embodiments, the integrated cooler is a thermo-electric cooler attached to or integrated into the microchip beneath each well. Optionally, the metal via is in thermal contact with a metal plate, an array of metal discs or a thermo-electric cooler, each of which functions as a heat sink or an active cooling means. Commercially-available thermo-electric coolers can also be incorporated into the inventive apparatus, because they can be obtained in a wide range of dimensions, including components of a size required for the fabrication of the microarrays of the present invention. In embodiments comprising metal heat sinks encompassing a metal plate or an array of metal discs, the plate or discs are composed of iron, aluminum, or other suitable metal. Parallel, variable cooling of individual wells in a microchip array may be accomplished through the use of addressing schemes, preferably a column-and-row or individual electrical addressing scheme, in order to independently control heat dissipation using cooling elements in the vicinity of each well.

In preferred embodiments of the microchip arrays of the invention, the thermal module includes temperature monitors, to monitor the temperature of the well using an integrated resistive thermal detector or a thermocouple. This can be incorporated into the substrate or added later, and is in thermal contact and proximity to the well structures of the microchips of the invention. The resistive thermal detector can be fabricated from a commercially available paste that can be processed in a customized manner for any given design. Such thermocouples are commercially available in sizes of at least 250 microns, including the sheath. In certain alternative embodiments, the temperature of the wells is monitored using an integrated optical system, for example, an infrared-based system.

In certain embodiments of the microchip arrays of the invention, reagents can be deposited in appropriate regions or components, or can be delivered to said components from other components on the microchip as outlined herein. In preferred embodiments, reagents can be delivered to the wells of a microchip array using a microfluidic reagent distribution system as outlined herein. In preferred embodiments, the microfluidic distribution system is controlled by pressure, using pumping means, or by electro-osmotic pumping means, and fluid flow is controlled by valving, using a system of microfluidic channels and chambers to advantageously direct fluid flow on the microchip.

Compared with available prior art devices, the microchip arrays of the present invention will allow for more efficient and inexpensive performance of molecular reactions. For example, the apparatus of

the present invention can be used to perform PCR using reduced amounts of reagents in less time and with higher throughput than is possible using any commercially- available PCR machine. In addition, as a result of the fabrication techniques employed in the construction of the apparatus of the present invention, the microchip of the present invention is distinguished from prior art microchips in that an increased number of molecular reactions can be performed on a single microchip array. Finally, the addressable nature of the microchip array of the present invention allows for parallel optimization of molecular reaction conditions or the performance of simultaneous molecular reactions under variant reaction conditions.

In addition to the components outlined above for reaction chambers, as described in U.S. Patent No. 5,587,128, the reaction chamber may comprise a composition, either in solution or adhered to the surface of the reaction chamber, that prevents the inhibition of an amplification reaction by the composition of the well. For example, the wall surfaces may be coated with a silane, for example using a silanization reagent such as dimethylchlorosilane, or coated with a siliconizing reagent such as Aquasil™ or Surfacil™ (Pierce, Rockford, IL), which are organosilanes containing a hydrolyzable group. This hydrolyzable group can hydrolyze in solution to form a silanol that can polymerize and form a tightly bonded film over the surface of the chamber. The coating may also include a blocking agent that can react with the film to further reduce inhibition; suitable blocking agents include amino acid polymers and polymers such as polyvinylpyrrolidone, polyadenylic acid and polymaleimide. Alternatively, for silicon substrates, a silicon oxide film may be provided on the walls, or the reaction chamber can be coated with a relatively inert polymer such as a polyvinylchloride. In addition, it may be desirable to add blocking polynucleotides to occupy any binding sites on the surface of the chamber.

In a preferred embodiment, the biological reaction chamber allows enzymatic cleavage or alteration of the target analyte. For example, restriction endonucleases may be used to cleave target nucleic acids comprising target sequences, for example genomic DNA, into smaller fragments to facilitate either amplification or detection. Alternatively, when the target analyte is a protein, it may be cleaved by a protease. Other types of enzymatic hydrolysis may also be done, depending on the composition of the target analyte. In addition, as outlined herein, the target analyte may comprise an enzyme and the reaction chamber comprises a substrate that is then cleaved to form a detectable product.

In addition, in one embodiment the reaction module includes a chamber for the physical alteration of all or part of the sample, for example for shearing genomic or large nucleic acids, nuclear lysis, ultrasound, etc.

In a preferred embodiment, the devices of the invention include at least one fluid pump. Pumps generally fall into two categories: "on chip" and "off chip"; that is, the pumps (generally electrode based pumps) can be contained within the device itself, or they can be contained on an apparatus into which the device fits, such that alignment occurs of the required flow channels to allow pumping of fluids.

In a preferred embodiment, the pumps are contained on the device itself. These pumps are generally electrode based pumps; that is, the application of electric fields can be used to move both charged particles and bulk solvent, depending on the composition of the sample and of the device. Suitable on chip pumps include, but are not limited to, electroosmotic (EO) pumps and electrohydrodynamic (EHD) pumps; these electrode based pumps have sometimes been referred to in the art as "electrokinetic (EK) pumps". All of these pumps rely on configurations of electrodes placed along a flow channel to result in the pumping of the fluids comprising the sample components. As is described in the art, the configurations for each of these electrode based pumps are slighly different; for example, the effectiveness of an EHD pump depends on the spacing between the two electrodes, with the closer together they are, the smaller the voltage required to be applied to effect fluid flow. Alternatively, for EO pumps, the spacing between the electrodes should be larger, with up to one-half the length of the channel in which fluids are being moved, since the electrode are only involved in applying force, and not, as in EHD, in creating charges on which the force will act.

In a preferred embodiment, an electroosmotic pump is used. Electroosmosis (EO) is based on the fact that the surface of many solids, including quartz, glass and others, become variously charged, negatively or positively, in the presence of ionic materials. The charged surfaces will attract oppositely charged counterions in aqueous solutions. Applying a voltage results in a migration of the counterions to the oppositely charged electrode, and moves the bulk of the fluid as well. The volume flow rate is proportional to the current, and the volume flow generated in the fluid is also proportional to the applied voltage. Electroosmostic flow is useful for liquids having some conductivity is and generally not applicable for non-polar solvents. EO pumps are described in U.S. Patent Nos. 4,908,112 and 5,632,876, PCT US95/14586 and WO97/43629, incorporated by reference.

In a preferred embodiment, an electrohydrodynamic (EHD) pump is used. In EHD, electrodes in contact with the fluid transfer charge when a voltage is applied. This charge transfer occurs either by transfer or removal of an electron to or from the fluid, such that liquid flow occurs in the direction from the charging electrode to the oppositely charged electrode. EHD pumps can be used to pump resistive fluids such as non-polar solvents. EHD pumps are described in U.S. Patent No. 5,632,876, hereby incorporated by reference.

The electrodes of the pumps preferably have a diameter from about 25 microns to about 100 microns, more preferably from about 50 microns to about 75 microns. Preferably, the electrodes protrude from the top of a flow channel to a depth of from about 5% to about 95% of the depth of the channel, with from about 25% to about 50% being preferred. In addition, as described in PCT US95/14586, an electrode-based internal pumping system can be be integrated into the liquid distribution system of the devices of the invention with flow-rate control at multiple pump sites and with fewer complex electronics if the pumps are operated by applying pulsed voltages across the electrodes; this gives the additional advantage of ease of integration into high density systems, reductions in the amount of electrolysis that occurs at electrodes, reductions in thermal convenction near the electrodes, and the ability to use simpler drivers, and the ability to use both simple and complex pulse wave geometries.

The voltages required to be applied to the electrodes cause fluid flow depends on the geometry of the electrodes and the properties of the fluids to be moved. The flow rate of the fluids is a function of the amplitude of the applied voltage between electrode, the electrode geometry and the fluid properties, which can be easily determined for each fluid. Test voltages used may be up to about 1500 volts, but an operating voltage of about 40 to 300 volts is desirable. An analog driver is generally used to vary the voltage applied to the pump from a DC power source. A transfer function for each fluid is determined experimentally as that applied voltage that produces the desired flow or fluid pressue to the fluid being moved in the channel. However, an analog driver is generally required for each pump along the channel and is suitable an operational amplifier.

In a preferred embodiment, a micromechanical pump is used, either on- or off-chip, as is known in the art.

In a preferred embodiment, an "off-chip" pump is used. For example, the devices of the invention may fit into an apparatus or appliance that has a nesting site for holding the device, that can register the ports (i.e. sample inlet ports, fluid inlet ports, and waste outlet ports) and electrode leads. The apparatus can including pumps that can apply the sample to the device; for example, can force cell-containing samples into cell lysis modules containing protrusions, to cause cell lysis upon application of sufficient flow pressure. Such pumps are well known in the art.

In a preferred embodiment, the devices of the invention include at least one fluid valve that can control the flow of fluid into or out of a module of the device, or divert the flow into one or more channels. A variety of valves are known in the art. For example, in one embodiment, the valve may comprise a capillary barrier, as generally described in PCT US97/07880, incorporated by reference. In this embodiment, the channel opens into a larger space designed to favor the formation of an energy

minimizing liquid surface such as a meniscus at the opening. Preferably, capillary barriers include a dam that raises the vertical height of the channel immediated before the opening into a larger space such a chamber. In addition, as described in U.S. Patent No. 5,858,195, incorporated herein by reference, a type of "virtual valve" can be used.

In a preferred embodiment, the devices of the invention include sealing ports, to allow the introduction of fluids, including samples, into any of the modules of the invention, with subsequent closure of the port to avoid the loss of the sample.

In a preferred embodiment, the devices of the invention include at least one storage module for assay reagents. These are connected to other modules of the system using flow channels and may comprise wells or chambers, or extended flow channels. They may contain any number of reagents, buffers, enzymes, electronic mediators, salts, etc., including freeze dried reagents.

In a preferred embodiment, the devices of the invention include a mixing module; again, as for storage modules, these may be extended flow channels (particularly useful for timed mixing), wells or chambers. Particularly in the case of extended flow channels, there may be protrusions on the side of the channel to cause mixing.

In addition, the systems of the invention that include the devices of the invention can include any number of microfluidic reagent or fluid handling and distribution systems. Thus, in a preferred embodiment, the systems of the invention comprise liquid handling components, including components for loading and unloading fluids at each station or sets of stations. The liquid handling systems can include robotic systems comprising any number of components. In addition, any or all of the steps outlined herein may be automated; thus, for example, the systems may be completely or partially automated.

As will be appreciated by those in the art, there are a wide variety of components which can be used, including, but not limited to, one or more robotic arms; plate handlers for the positioning of microplates; holders with cartridges and/or caps; automated lid or cap handlers to remove and replace lids for wells on non-cross contamination plates; tip assemblies for sample distribution with disposable tips; washable tip assemblies for sample distribution; 96 well (or higher) loading blocks; cooled reagent racks; microtitler plate pipette positions (optionally cooled); stacking towers for plates and tips; and computer systems.

Fully robotic or microfluidic systems include automated liquid-, particle-, cell- and organism-handling including high throughput pipetting to perform all steps of screening applications. This includes liquid, particle, cell, and organism manipulations such as aspiration, dispensing, mixing, diluting, washing, accurate volumetric transfers; retrieving, and discarding of pipet tips; and repetitive pipetting of identical volumes for multiple deliveries from a single sample aspiration. These manipulations are cross-contamination-free liquid, particle, cell, and organism transfers. This instrument performs automated replication of microplate samples to filters, membranes, and/or daughter plates, high-density transfers, full-plate serial dilutions, and high capacity operation.

In a preferred embodiment, chemically derivatized particles, plates, cartridges, tubes, magnetic particles, or other solid phase matrix with specificity to the assay components are used. The binding surfaces of microplates, tubes or any solid phase matrices include non-polar surfaces, highly polar surfaces, modified dextran coating to promote covalent binding, antibody coating, affinity media to bind fusion proteins or peptides, surface-fixed proteins such as recombinant protein A or G, nucleotide resins or coatings, and other affinity matrix are useful in this invention.

In a preferred embodiment, platforms for multi-well plates, multi-tubes, holders, cartridges, minitubes, deep-well plates, microfuge tubes, cryovials, square well plates, filters, chips, optic fibers, beads, and other solid-phase matrices or platform with various volumes are accommodated on an upgradable modular platform for additional capacity. This modular platform includes a variable speed orbital shaker, and multi-position work decks for source samples, sample and reagent dilution, assay plates, sample and reagent reservoirs, pipette tips, and an active wash station.

In a preferred embodiment, thermocycler and thermoregulating systems such as Peltier systems are used for stabilizing the temperature of the heat exchangers such as controlled blocks or platforms to provide accurate temperature control of incubating samples from 4°C to 100°C.

In a preferred embodiment, interchangeable pipet heads (single or multi-channel) with single or multiple magnetic probes, affinity probes, or pipetters robotically manipulate the liquid, particles, cells, and organisms. Multi-well or multi-tube magnetic separators or platforms manipulate liquid, particles, cells, and organisms in single or multiple sample formats.

In some embodiments, the instrumentation will include a detector, which can be a wide variety of different detectors, depending on the presence or absence of labels and the assay. In a preferred embodiment, useful detectors include a microscope(s) with multiple channels of fluorescence; plate readers to provide fluorescent, ultraviolet and visible spectrophotometric detection with single and dual

wavelength endpoint and kinetics capability, fluroescence resonance energy transfer (FRET), luminescence, quenching, two-photon excitation, and intensity redistribution; CCD cameras to capture and transform data and images into quantifiable formats; a computer workstation; and one or more barcode readers.

These instruments can fit in a sterile laminar flow or fume hood, or are enclosed, self-contained systems, for cell culture growth and transformation in multi-well plates or tubes and for hazardous operations. Similarly, operations can be performed under controlled environments such as inert gas (for example to prevent lipid oxidation). The living cells will be grown under controlled growth conditions, with controls for temperature, humidity, and gas for time series of the live cell assays. Automated transformation of cells and automated colony pickers will facilitate rapid screening of desired cells.

Flow cytometry or capillary electrophoresis formats can be used for individual capture of magnetic and other beads, particles, cells, and organisms.

The flexible hardware and software allow instrument adaptability for multiple applications. The software program modules allow creation, modification, and running of methods. The system diagnostic modules allow instrument alignment, correct connections, and motor operations. The customized tools, labware, and liquid, particle, cell and organism transfer patterns allow different applications to be performed. The database allows method and parameter storage. Robotic and computer interfaces allow communication between instruments.

In a preferred embodiment, the robotic apparatus includes a central processing unit which communicates with a memory and a set of input/output devices (e.g., keyboard, mouse, monitor, printer, etc.) through a bus. As discussed herein, this may be in addition to or in place of the CPU for the FTMS data analysis. The general interaction between a central processing unit, a memory, input/output devices, and a bus is known in the art. Thus, a variety of different procedures, depending on the experiments to be run, are stored in the CPU memory.

These robotic fluid handling systems can utilize any number of different reagents, including buffers, reagents, supercritical fluids and gases (particularly for extraction), samples, washes, assay components, etc. Similarly, when the sample is limited, all components (capillaries, connections, etc.) can be minimized to avoid large dead volumes or dilution effects.

In a preferred embodiment, the devices of the invention include a detection module. The present invention is directed to methods and compositions useful in the detection of biological target analyte species such as nucleic acids and proteins as outlined herein. Suitable detection methods are described in U.S.S.N.s 09/458,553; 09/458,501; 09/572,187; 09/495,992; 09/344,217; WO00/31148; 09/439,889; 09/438,209; 09/344,620; PCTUS00/17422; 09/478,727, all of which are expressly incorporated by reference in their entirety.

In a preferred embodiment, the devices of the invention further comprise a reusable reaction apparatus that has one or more biologically inert reaction chambers into which biologically reactive sample fluid mixtures are introduced. The sample can thus be introduced to one or more biochips. This general embodiment is outlined in Figures 13-25 and described below.

In this embodiment, the invention broadly comprises a base plate having a first surface and a cavity disposed in the first surface, wherein the cavity comprises one or more well structures and a biochip comprising one or more microarrays of biologically reactive sites disposed on a first surface can be inserted into the apparatus such that the first surface of the biochip is in direct communication with the well structures and is removably clamped to the base plate using a compression plate. A sealing member is disposed between the first surface of the substrate and the first surface of the base plate in each well structure, thereby defining one or more reaction chambers. Each well structure has at least two fluid ports for introducing fluid samples into and removing fluid samples from the reaction chambers. The invention further comprises a seal for the fluid ports.

A preferred embodiment of the invention is configured to accommodate a biochip comprising a standard microscope slide having a plurality of hydrogel-based microarrays attached thereto. A further preferred embodiment of the apparatus includes the biochip. By "biochip" herein is meant one or more microarrays of capture binding ligands or biologically reactive sites immobilized on the surface of a substrate such as those outlined herein. By "binding ligand" or grammatical equivalents herein is meant a compound that is used to probe for the presence of the target analyte, and that will bind to the analyte. "Capture binding ligands" are generally bound (preferably covalently) to a surface of the substrate, or to a hydrogel on the surface. Preferred microarrays include those outlined in U.S.S.N.s 09/458,553; 09/458,501; 09/572,187; 09/495,992; 09/344,217; WO00/31148; 09/439,889; 09/438,209; 09/344,620; PCTUS00/17422; 09/478,727, all of which are expressly incorporated by reference in their entirety.

In preferred embodiments of the present invention, the sealing member around the perimeter of each well structure comprises an O-ring or sheet of gasket material.

In further preferred embodiments, the fluid ports allow introduction of fluid sample via a standard pipet tip or tubing. In still further preferred embodiments, the fluid ports allow interface to an external pumping system that provides mixing and pressurization of the fluid in each reaction chamber to provide uniform target molecule concentration and dissolve gas bubbles, respectively.

In preferred embodiments, the fluid port seal comprises a layer of flexible, thermally conductive material on which is disposed a layer of pressure-sensitive adhesive.

In other preferred embodiments of the invention, the biological compatibility of the base plate material is enhanced by the addition of a biologically compatible surface coating to the first surface of the base plate. The adhesion of the surface coating to the first surface of the base plate may be further enhanced by application of a layer of primer on the first surface of the base plate prior to application of the surface coating.

In further preferred embodiments of the invention, the compression plate is removably affixed to the base plate by a plurality of retaining pins disposed along the perimeter of the base plate which fit into corresponding locking apertures disposed along the perimeter of the retaining plate. In yet further preferred embodiments, the compression plate comprises a cavity wherein a compliance layer is seated.

In preferred embodiments of the microfluidic reaction apparatus, the retaining plate, compression plate and compliance layer further comprise one or more viewing ports corresponding in position to the reaction chambers for observation or detection of the biological reactions taking place inside the reaction chambers.

The invention is advantageously used for performing thermally controlled biological reactions, and in preferred embodiments comprises a heating element and a thermal cycling device.

In a preferred embodiment, the devices comprise microchips comprising one or a plurality of well structures, a cover or substance to seal the wells, a thermal module including a temperature monitor for each well, as well as the other components outlined herein, particular reagent storage modules.

A number of preferred embodiments follow; the first references figures 5-12 and Examples 1 and 2.

Figure 5 is a schematic representation of a cross-sectional view of the PCR microchip **1001** of the present invention. The microchip **1001** is built on a layer of thermal insulating material **1002**, that is

most preferably made of glass, silicon, plastic, or ceramic. In a preferred embodiment, this layer is made of ceramic. As ceramic materials are intrinsically good thermal insulators, a thermal insulating layer made of ceramic provides good well-to-well thermal insulation that is a requirement for performing parallel, independent PCR amplifications on a single microchip. As the thermal conductivity of silicon is about eleven times greater than that of ceramics, the multilayer ceramic microarray of the present invention has an advantage over prior art devices constructed of silicon in that an increased number of well structures for performing molecular reactions may be placed onto an array of significantly reduced size. In addition, the multilayer ceramic microarrays of the present invention have an advantage over prior art devices constructed of silicon in that electrical cross-talk is lower in the ceramic microarrays. Furthermore, the ceramic microarrays of the present invention are more biocompatible than the silicon microarrays of prior art devices.

The microchip **1001** of the present invention contains one or more well structures **1003**, in which nucleic acid amplifications such as PCR can be performed. In some embodiments well structures are formed from a thermal conducting material such as undoped silicon, metals, or modified plastics. In preferred embodiments, the well structures are formed from metals. In more preferred embodiments the metal is silver or silver palladium (containing up to 30% palladium). In other preferred embodiments, the well structures are formed from copper, Ni-Molybdenum, platinum, or gold. Typical formulations of such materials for the fabrication of the well structures of the apparatus of the present invention can be obtained from thick film manufacturers such as DuPont (Research Triangle Park, NC) or Hereaus (West Conshohocken, PA).

Well structures comprised of a thermal conducting material are separated on the microchip by channels **1004** comprising thermal insulating material such as glass, silicon, plastic, ceramic, or air contained in air channel components of the microchip. As used herein, channels and microchannels can contain fluids or gasses, and can be used to move fluids or gasses between components on the microchip.

In a preferred embodiment, the thermal insulating material **1004** used to separate the well structures comprises air contained in the air channels (Fig. 6). In one preferred embodiment, the air channels have a width of at least 75 microns. Since air has a poor thermal conductivity, air channels of this dimension are useful in reducing the thermal cross-talk between the plurality of well structures of the microchip array of the present invention. Furthermore, the multilayer ceramic microarrays of the present invention have an advantage over prior art devices constructed of silicon in that the fabrication of air channels produces a channel of more uniform dimensions.

Where air channels are used for thermal insulation in the multilayer microfluidics devices of the present invention, the channels can be, for example, cylinders, rectangles, or squares, or any other convenient or useful cross-sectional shape, and the channels are limited by the requirement that at least one vertex is attached to the green-sheet layer from which the channel has been formed. As a result of this limitation, air structures in the microchip array of the present invention are not fabricated to completely surround any well structure without permitting at least one vertex between the well structure and the green-sheet layer to be maintained.

An integrated temperature sensor or thermosensor monitors the temperature of each of the well structures on the microchips of the invention. In preferred embodiments, the integrated thermosensor is a thermoelectric, optical or electrochemical sensor as illustrated as component **1006** in Figure 7B. Alternatively, the temperature of the well is monitored using an integrated resistive thermal detector or a thermocouple, advantageously molded into the microchip substrate in thermal contact and proximity to the well structures of the microchips of the invention.

In a preferred embodiment, a cover **1007** seals the PCR microchip **1001** of the present invention. In some embodiments, certain components of the heating, cooling, or temperature monitoring systems are integrated into the cover. In still other embodiments of the present invention, a separate heating system to prevent condensation of the reaction mixture onto the cover is incorporated into the cover itself. Alternatively, a covering of mineral oil in individual wells can be used in place of the cover of the preferred embodiment.

A preferred embodiment of the microchips of the present invention is a PCR microchip array comprising a plurality of well structures in which parallel, independent amplification reactions can be performed. In certain and preferred embodiments, heating of the microchip array is accomplished through column-and-row electrical addressing of individual well structures. In alternative preferred embodiments, the well structures are each individually addressed. Figure 8 illustrates a schematic representation of a microchip array with column-and-row electrical addressing. Figure 9 illustrates a schematic representation of a microchip array with individual cell electrical addressing. In contrast to column-and-row addressing, an individual addressing configuration allows for the independent heating of each individual well structure.

To fabricate glass or silicon microchips for use in parallel, independently controlled molecular reactions a complex arrangement of heating elements would be required. However, in a preferred embodiment, multilayer ceramics technology permits electrical connections to individual well structures to be distributed three-dimensionally in the microchip.

Figure 10 is a schematic representation of a cross-sectional view of one embodiment of the well structure and integrated heating and cooling elements associated therewith of the microchip array of the present invention. In this embodiment of the present invention, the heating elements are wrapped around the perimeter of the well and form a spiral from top to bottom (as further illustrated in Figure 7B).

The integrated heaters of the well structures can be fabricated from metallic pastes containing metal particles, such as silver, platinum, gold, copper, tungsten, nickel, tin, or alloys thereof. Preferably the integrated heaters are fabricated from a metallic paste that is silver. In preferred embodiments, the integrated heaters comprise a lead that is about 30 wide mil, connected to a resistive heater that is about 5 mil wide. This arrangement is shown in Figure 7B.

Also provided are resistive thermal devices, for monitoring the thermal energy and temperature produced by the resistive heaters. The RTD, that senses the heat produced by the heater, has a lead that is 10-20 mil wide, a body of the RTD is 5 mil wide and is about 8-15 microns thick. This arrangement is also shown in Figure 7B.

In a preferred embodiment of the present invention, the supporting substrate has a surface area of between 1 and 100 cm^2 containing between 1 and 500 well structures having the shape and dimensions as disclosed herein. In the most preferred embodiments, the well structures are arranged on the substrate so as to be separated by a distance of between 0.1 to 10 mm. In more preferred embodiments, the well structures are separated by channels of insulated material having the shape and dimensions as disclosed herein and the channels and well structures are separated by a distance of between 0.1 and 10 mm. Most preferably, the well structures are regularly spaced on the solid substrate with a uniform spacing there between.

Another preferred embodiment is described with reference to Figures 1-4. Shown schematically in Figure 1 is a microfluidic DNA analysis system 10, in accordance with a preferred embodiment of the present invention. A sample inlet port 12 is in fluid communication with a cell lysis chamber 14, and cell lysis chamber 14 is in fluid communication with a DNA separation chamber 16. A buffer injection port 18 and a waste outlet port 20 are preferably provided in fluid communication with DNA separation chamber 16. A DNA amplification chamber 22 is in fluid communication with DNA separation chamber 16. A reagent injection port 24 and a waste outlet port 26 are preferably provided in fluid communication with DNA amplification chamber 22. Finally, a DNA detection system 28 is in fluid communication with DNA amplification chamber 22.

Preferably, a first fluid flow control system 30 is provided between cell lysis chamber 14 and DNA separation chamber 16 and a second fluid flow control system 32 is provided between DNA separation chamber 16 and DNA amplification chamber 22. A third fluid control system 34 may also be provided between DNA amplification chamber 22 and DNA detection system 28. Fluid flow control systems 30-34 serve to control the flow of fluid therethrough, thereby facilitating control over the flow of fluid through system 10, such as the flow of fluid from one chamber to another. Fluid flow control systems 30-34 can comprise microfluidic pumping systems, such as electroosmotic pumping systems. In particular, when an electroosmotic pumping system is provided as a pair of electrodes disposed in a microfluidic channel, little or no fluid flow occurs in the channel until the electroosmotic pumping system is turned on. Alternatively, fluid flow control systems 30-34 can comprise capillary stop valves. In the capillary stop valve approach, a discontinuity in the channel, such as an abrupt decrease in channel cross-section or the presence of a hydrophobic region, substantially prevents the passage of fluid until a sufficiently high pressure is applied.

In operation, DNA analysis system 10 extracts DNA from a small sample of cells, amplifies the extracted DNA, and then characterizes the amplified DNA, such as by detecting the presence of particular nucleotide sequences. Specifically, a fluidic sample containing the cells to be analyzed is introduced into system 10 through sample inlet port 12. From port 12, the sample enters cell lysis chamber 14. In chamber 14, the cells in the sample are lysed to release their cell contents, most notably the DNA contained in the cells. The cell lysis is preferably performed by subjecting the cells in chamber 14 to pulses of a high electric field strength, typically in the range of about 1 kV/cm to 10 kV/cm. However, other methods could also be used for cell lysis, such as chemical or thermal cell lysis.

After cell lysis, fluid flow control system 30 allows the fluid containing the cell contents to pass to DNA separation chamber 16. In chamber 16, the DNA from the cells is separated from the other cell contents. Preferably, the DNA separation is accomplished by manipulating paramagnetic micro-beads. Paramagnetic beads can be manipulated using magnetic fields, as the beads preferentially collect in areas of high magnetic field strength. Thus, the paramagnetic beads can be entrained in chamber 16 by the application of a magnetic field. However, when the magnetic field is turned off, the beads are able to move though the fluid in chamber 16.

The preferred paramagnetic beads have typical diameters in the range of 2.8 to 5 microns and preferentially adsorb duplex DNA under high salt (e.g., 3 to 4 molar Na^+) conditions. Suitable commercially available paramagnetic beads include Dynabeads DNA DIRECT™ from Dynal, Inc.,

Oslo, Norway and MPG borosilicate glass micro-beads, product number MCPG0502, from CPG, Inc., Lincoln Park, New Jersey.

The paramagnetic beads are used to separate the DNA from the unwanted cell contents in the following way. First, fluid containing the paramagnetic beads is introduced into chamber 16, such as through buffer injection port 18. The amount of paramagnetic beads to be added will depend on the amount of DNA that is anticipated will be recovered from the sample and on the rated DNA loading capacity for the particular beads used. The beads are allowed to mix with the cell contents in chamber 16 for a few minutes. A magnetic field is then applied to chamber 16 to immobilize the paramagnetic beads. With the beads immobilized, the material in chamber 16 is exposed to a flow of a high salt buffer solution, typically about 3 to 4 molar Na^+, that is introduced through buffer injection port 18. In this flow, the buffer and unwanted cell contents are flushed out of chamber 16 through waste outlet port 20. However, under these high salt conditions, the DNA from the cells remains adsorbed on the surfaces of the paramagnetic beads. Moreover, during this high salt wash step, the paramagnetic beads are entrained in chamber 16 by the magnetic field.

After the high salt wash step, a low salt buffer, typically about 10 millimolar Na^+, is introduced into chamber 16 through buffer injection port 18. Under these low salt condition, the DNA elutes from the paramagnetic beads. With the paramagnetic beads entrained in chamber 16 by the use of the magnetic field, fluid flow control system 32 allows the low salt buffer containing the eluted DNA to pass to amplification chamber 22.

The DNA in chamber 22 is amplified, preferably by using the polymerase chain reaction (PCR). PCR is a well-known process whereby the amount of DNA can be amplified by factors in the range of 10^6 to 10^8. In the PCR process, the DNA is subjected to many cycles (typically about 20 to 40 cycles) of a specific temperature regimen, during which the DNA is exposed to a thermostable polymerase, such as AmpliTaq™ DNA polymerase from Perkin-Elmer, Inc., a mixture of deoxynucleoside triphosphates, and single-stranded oligonucleotide primers (typically about 15 to 25 bases in length). Each cycle comprises a thermal denaturation step, a primer annealing step, and a primer extension step. During the thermal denaturation step, double-stranded DNA is thermally converted to single-stranded DNA. The thermal denaturation step is typically performed at a temperature of 92 to 95°C for 30 to 60 seconds. During the annealing step, the primers specifically anneal to portions of the single-stranded DNA. The annealing is typically performed at a temperature of 50 to 60°C for about 30 seconds. During the primer extension step, the mononucleotides are incorporated into the annealed DNA in the 5' to 3' direction. The primer extension step is typically performed at 72°C for 30 seconds to several

minutes, depending on the characteristics of the nucleotide sequences that are involved. The result of each complete cycle is the generation of two exact copies of each original duplex DNA molecule.

The PCR process is conducted in chamber 22 to amplify the DNA introduced from chamber 16. Specifically, the polymerase and other reagents needed to perform PCR are added to chamber 22 through reagent injection port 24. The temperature of chamber 22 is adjusted to perform the various steps in the PCR process, as described above, for a desired number of cycles. Heating and cooling elements may be provided in thermal contact with chamber 22 for adjusting its temperature as required.

After PCR, fluid flow control system 34 allows the amplified DNA to pass to DNA detection system 28. DNA detection system 28 can include a capillary electrophoresis device, in which case the amplified products would be characterized by their electropheretic mobility. The DNA in the capillary electrophoresis device could be detected electrically at one or more locations along the electrophoresis channel. Preferably, however, the DNA is detected optically, such as by laser-induced fluorescence. For this approach, a fluorophore is added to chamber 22, such as through reagent injection port 24, and allowed to conjugate with the amplified DNA before the amplified DNA is introduced into the capillary electrophoresis device.

Alternatively, DNA detection system 28 may include a molecular probe array, such as in DNA detection system 50 shown schematically in Figure 2. System 50 includes a molecular probe array 52 comprising a plurality of test sites 54 formed into a substrate 56. Each one of test sites 54 contains known probe molecules, such as oligonucleotides, that are able to hybridize with a specific nucleotide sequence that may be present in the amplified DNA to which it is exposed. Preferably, the probe molecules are immobilized in a gel, such as a polyacrylamide gel, in each of test sites 54. By detecting in which one of test sites 54 hybridization occurs, the nucleotide sequences present in the amplified DNA can be determined. Detecting such hybridization can be accomplished by detecting changes in the optical or electrical properties of the test site in which hybridization occurs.

Preferably, hybridization is detected optically. To allow for optical detection, the amplified DNA is preferably conjugated to a fluorophore, such as YOYO-1 before being introduced to the molecular probe array, as described above. Then, a source 58 produces electromagnetic radiation at an excitation wavelength, i.e., a wavelength that induces fluorescence in the fluorophore, and a source optical system 60 focuses this electromagnetic radiation onto test sites 54. The fluorescence radiation from test sites 54 is then focused onto a detector 62 by means of a detector optical system 64. A filter 66 may be used to filter out the excitation wavelength. Further details regarding preferred optical

detection systems is provided in co-pending U.S. Patent Application No. 09/440,031, entitled "System and Method for Detecting Molecules Using an Active Pixel Sensor," which was filed on November 12, 1999. The disclosure of this co-pending patent application is fully incorporated herein by reference. Other types of molecular probe arrays could also be used, such as those described in U.S. Patent No. 5,653,939, which is fully incorporated herein by reference.

DNA analysis system 10 is preferably provided as a substantially monolithic microfluidic device that is formed by laminating and sintering together multiple layers of green-sheet, as described in more detail below, though not all of system 10 may be provided on the same monolithic device. For example, DNA detection system 28 may be provided in whole, or in part, as a separate device. However, at least DNA amplification chamber 16 of system 10 is provided as a substantially monolithic microfluidic device.

In particular, shown in Figures 3 and 3A is a substantially monolithic microfluidic DNA amplification device 100, in accordance with a first preferred embodiment of the present invention. Shown in Figures 4 and 4A is a substantially monolithic microfluidic DNA amplification device 300, in accordance with a second preferred embodiment of the present invention. As described below in more detail, device 100 is provided with a capillary electrophoresis channel for DNA detection, and device 300 is intended to be coupled to a molecular probe array for DNA detection.

Shown in Figures 3 and 3A is a DNA amplification device 100, in accordance with a first preferred embodiment of the present invention. Device 100 is made from green-sheet layers 102-148 that have been laminated and sintered together to form a substantially monolithic structure, as described above. Green-sheet layers 102-148 are each preferably about 100 microns thick. A cell lysis chamber 150 is formed into layers 104 and 106, a DNA separation chamber 152 is formed into layers 104 and 106, and a DNA amplification chamber 154 is formed into layers 104-142.

A sample inlet port 156 is defined by a via 158 formed into layer 102. Cell lysis chamber 150 is connected to via 158 through a channel 160 formed in layer 104. A channel 162 interconnecting chamber 150 with chamber 152 is formed in layer 104, and a channel 164 interconnects chamber 152 with chamber 154. An outlet port 166 is defined by a via 168 formed into layer 102, and a capillary electrophoresis channel 170 interconnects chamber 154 with via 168.

Cell lysis chamber 150 is typically about 50 microns wide, about 1 millimeter long, and extends about 100 microns below the channels that connect to it. DNA separation chamber 152 typically extends about 100 dimensions below the channels that connect to it, with a cross-section of 100 microns by

100 microns. DNA amplification chamber typically extends about 2 millimeters below the channels that connect to it, with a cross-section of roughly 1 millimeter by 1 millimeter. Channels 160, 162, and 164 are typically about 50 microns wide, 100 microns deep, and from about 500 microns to one centimeter long. Capillary electrophoresis channel 170 is typically about 45 microns wide, 20 microns wide, and from about 2 to 5 centimeters long.

As shown in Figure 3A, a buffer injection port 172 is provided as a via formed into layer 102, and a waste outlet port 174 is provided as a via formed into layer 102. Ports 172 and 174 are connected to chamber 152 via channels 176 and 178, respectively, formed into layer 104. Similarly, a reagent injection port 180 is provided as a via formed into layer 102, and a waste outlet port 182 is provided as a via formed into layer 102. Channels 184 and 186, formed into layer 104, connect chamber 154 to ports 180 and 182, respectively.

As shown in Figure 3, cell lysis chamber 150 is provided with opposing electrodes 188 and 190, which are sintered to layers 102 and 108, respectively. Electrode 188 is preferably formed by depositing, such as by screen printing, a conductive material in the form of a thick-film paste onto the lower surface of green-sheet layer 102. Similarly, electrode 190 is formed by depositing a conductive thick-film paste onto the upper surface of green-sheet layer 108. Electrodes 188 and 190 are preferably provided with a pointed surface for electric field enhancement. The pointed surfaces of electrodes 158 and 160 may be made by applying successive layers of conductive thick-film paste in a predetermined pattern.

Device 100 is provided with conductive leads to apply voltages to electrodes 188 and 190 from a voltage source (not shown) external to device 100. For example a conductor-filled via 191 may be provided in layer 102 to electrically connect electrode 188 to the outer surface of device 100. Similarly, a conductive lead defined by conductor-filled vias 192-196, formed into layers 102-106, and a conductive trace 198 formed on the surface of layer 108, electrically connects electrode 190 to the outer surface of device 100. To perform cell lysis, a voltage is applied between electrodes 158 and 160 sufficient to develop an electric field strength of about 10 to 50 kV/cm in cell lysis chamber 150. The voltage is preferably provided in the form of pulses at a frequency of about 10-100 Hz and a duty cycle of about 50%.

Channel 162 is preferably provided with electroosmotic pumping to transport fluid from chamber 150 to chamber 152. In fact, due to the small dimensions of channel 162, as compared to chamber 150, capillary forces prevent fluid in chamber 150 from flowing through channel 162 unless pressure or pumping is applied to the fluid. To enable electroosmotic pumping, electrodes 200 and 202 are

disposed at opposite ends of channel 162, as shown in Figure 3. Electrodes 200 and 202 may be conveniently provided as conductor-filled vias formed into layer 102. To enable electroosmotic pumping, a voltage is applied between electrodes 200 and 202, sufficient to develop an electric field strength of about 100 to 500 V/cm in channel 162.

Similarly, fluid is transported from chamber 152 to chamber 154 by electroosmotic pumping through channel 164. To allow for electroosmotic pumping, electrodes 204 and 206 are disposed at opposite ends of channel 164. A voltage is applied between electrodes 204 and 206, sufficient to develop an electric field strength of about 100 to 500 V/cm in channel 164. Electrodes 204 and 206 are preferably provided as conductor-filled vias in layer 102.

In order to use paramagnetic beads to separate the DNA from the lysed cell contents, as described above, device 100 is preferably provided with means for generating a magnetic field extending into DNA separation chamber 152. The magnetic field is preferably created by an electromagnet 210 that is integral to device 100. Electromagnet 210 preferably comprises a coil 212, with the axis of coil 212 extending into chamber 152, and a core 214 coaxial with coil 212. Coil 212 is preferably defined by loops 216-222 of conductive material sintered to layers 108-114, respectively, and a series of conductor-filled vias (not shown) formed into layers 108-112 that electrically connect loops 216-222. Loops 216-222 are preferably formed by depositing conductive material in the form of a thick-film paste onto green-sheet layers 108-114, respectively. To allow current to be applied to coil 212 from a current source (not shown) external to device 100, conductive leads 224 and 226 are provided. Conductive leads 224 and 226 may be disposed in device 100 in any convenient manner. For example, in the embodiment shown in Figure 3, conductive lead 224 is defined by a trace of conductive material on the surface of layer 108 and a series of conductor-filled vias formed into layers 108-148, so as to provide an electrical connection from loop 216 to the exterior of device 100. Conductive lead 226 is defined by a trace of conductive material on the surface of layer 114 and a series of conductor-filled vias in layers 114-148, so as to provide and electrical connection from loop 222 to the exterior of device 100. Other configurations for leads 224 and 226 could be used, however.

Core 214 is made of a high magnetic permeability material, such as ferrite. Core 214 is preferably provided by forming aligned vias 228-234 in green-sheet layers 108-114 and filling vias 228-234 with a thick-film paste containing a ferrite material so that the ferrite material becomes sintered into layers 108-114. An example of a suitable ferrite-containing thick-film paste is SEI ferrite paste MPS #220, sold by Scrantom Engineering, Inc., Costa Mesa, California.

To bring the fluids in DNA amplification chamber 154 to the appropriate temperatures for performing PCR, device 100 is provided with a heater 240 and a cooling element 242 in thermal contact with chamber 154. Heater 240 is preferably configured as a coil surrounding chamber 154, the coil being defined by loops 244-252 of conductive material, preferably deposited in the form of a thick-film paste on the surface of and sintered to layers 110, 114, 118, 122, 126, 130, 132, 136, and 140, respectively. A series of conductor-filled vias (not shown) formed into layers 110-140 electrically connect loops 240-252.

To allow current to be applied to coil 240 from a current source (not shown) external to device 100, conductive leads 254 and 255 extend from loops 244 and 252, respectively, to the outer surface of device 100. To provide for efficient heating, loops 244-252 preferably have a high resistance compared to conductive leads 254 and 255. Conductive leads 254 and 255 may be disposed in device 100 in any convenient manner. For example, in the embodiment shown in Figure 3, conductive lead 254 is defined by a trace of conductive material on the surface of layer 110 and a series of conductor-filled vias formed into layers 110-148. Conductive lead 255 is defined by a trace of conductive material on the surface of layer 142 and a series of conductor-filled vias in layers 142-148. Other configurations could be used for leads 254 and 255, however.

Cooling element 242 preferably cools chamber 154 thermoelectrically. Thermoelectric cooling element 242 may comprise alternating segments of n-type and p-type thermoelectric material, such as n-type segments 260-266 and p-type segments 268-274, that are connected in series by traces of conductive material, such as the conductive traces on the surfaces of layers 144 and 148, as shown in Figure 3. In this way, when a voltage of the appropriate polarity is applied to thermoelectric element 242, it transfers heat from chamber 154 to layer 148. N-type segments 260-266 and p-type segments 268-274 may be provided by forming vias in green-sheet layers 144 and 146 and filling the vias with a thick-film paste containing either an n-type or p-type thermoelectric material, so that the thermoelectric material becomes sintered into layers 144 and 146. The thermoelectric material is preferably $Si_{0.8}Ge_{0.2}$ that has been doped, either with phosphorus to be n-type or with boron to be p-type. This material may be co-fired with the green-sheet layers at 850°C in a reducing atmosphere.
To allow current to be applied to thermoelectric element 242 from a current source (not shown) external to device 100, conductive leads 276 and 277 extend from segments 260 and 274, respectively, to the outer surface of device 100. Conductive leads 276 and 277 may be disposed in device 100 in any convenient manner. For example, in the embodiment shown in Figure 3, conductive leads 276 and 277 are each defined by a trace of conductive material on the surface of layer 148 and a conductor-filled via formed into layer 148.

An alternative approach for cooling DNA amplification chamber 154 is to reduce the thermal mass associated with chamber 154 and to rely on ambient cooling.

Device 100 also preferably includes at least one temperature sensor to measure the temperature of chamber 154. More particularly, because of the relatively large depth of chamber 154, the embodiment shown in Figure 3 includes three temperature sensors 280, 281, and 282, disposed at three different vertical locations in thermal contact with chamber 154. In this way, an average measured temperature for chamber 154 can be calculated. Based on this average measured temperature, heater 240 and cooling element 242 can be controlled at each stage in the PCR process so that the chamber 154 is at the appropriate temperature.

Temperature sensors 280-282 each comprise a trace of a conductive material having a resistance that is substantially dependent on temperature. Platinum is the preferred conductive material. Temperature sensors 280-282 each comprise a platinum trace deposited as a thick-film paste on the surface of and sintered to green-sheet layers 112, 128, and 144, respectively. A pair of conductive leads 283-285 extend from each of temperature sensors 280-282 to the exterior of device 100, respectively. Conductive leads 283-285 may be disposed in device 100 in any convenient manner, such as by a series of conductive traces and conductor-filled vias.

Capillary electrophoresis channel 170 is used for electrophoretically separating the amplified DNA products from chamber 154. To be able to perform capillary electrophoresis, channel 170 is filled with an electrophoretic medium, such as a polyacrylamide gel, and electrodes 290 and 292 are disposed at opposite ends of channel 170. A voltage is applied between electrodes 260 and 262, sufficient to develop an electric field strength of about 100-500 V/cm. The applied electric field pumps fluid electroosmotically from chamber 154 into channel 170. Moreover, under the influence of this electric field, the amplified DNA products move through channel 170 toward outlet 166, and the different components in the amplified DNA products become separated based on their differing electrophoretic mobilities. Ports 182 and 166 maybe used for flushing out chamber 154 and channel 170.

Preferably the amplified DNA products are conjugated with a fluorophore, as described above, before entering channel 170, so that their location within channel 170 can be determined using laser-induced fluorescence. To perform laser-induced fluorescence, a window 294, made of an optically transmissive material, is provided in layer 102 over channel 170. Window 294 may be formed by punching out a portion of green-sheet layer 102 and then filling the punched-out portion with a thick-film paste containing glass particles. During the firing process, the glass in the thick-film paste becomes sintered to layer 102 so as to provide glass window 294 therein. Alternatively, green-sheet

layer 102 may already contain glass particles so as to be optically transmissive when fired. Using either approach, optical access is provided to channel 170.

A light source (not shown), such as a laser, of a wavelength appropriate to induce fluorescence in the fluorophore-conjugated DNA products is focused through window 294 into channel 170. The fluorescence emitted from the fluorophore-conjugated DNA products is then imaged through window 294 onto a detector (not shown), such as a charge-coupled device.

As the fluids flowing through device 100 will contain DNA, it is important that all of the surfaces with which the fluid comes into contact be biocompatible. Layers 102-148 will themselves have varying degrees of biocompatibility, depending on the materials present in the green-sheet layers. However, it has been found that adequate biocompatibility can be achieved by coating the surfaces inside device 100 with poly-p-xylene.

Shown in Figures 4 and 4A is a DNA amplification device 300, in accordance with a second preferred embodiment of the present invention. Device 300 is similar to device 200 in most respects. In particular, device 300 is formed from green-sheet layers 302-348 that have been laminated and sintered together to form a substantially monolithic structure. Device 300 includes an inlet port 350 in fluid communication with a cell lysis chamber 352 via a channel 354. Cell lysis chamber 352 is provided with a pair of electrodes 356 and 358, with corresponding conductive leads 360 and 362, for performing electrostatic cell lysis. Cell lysis chamber 352 is connected to a DNA separation chamber 364 via a channel 366. A buffer injection port 368 and a waste outlet port are connected to DNA separation chamber 364 via channels 372 and 374, respectively. An electromagnet 380, having a coil of conductive material 382 and a core of high magnetic permeability material 384, is provided in device 300 to direct a magnetic field into DNA separation chamber 364. Channel 366 is provided with electrodes 386 and 388 for electroosmotic pumping. A DNA amplification chamber 390 is connected to DNA separation chamber 364 via a channel 392. A reagent injection port 394 and a waste outlet port 396 are connected to chamber 390 via channels 398 and 400, respectively. Device 300 is provided with a heater 402 for heating chamber 390 and a thermoelectric cooling element 404 for cooling chamber 390. Additionally, three temperature sensors 406, 408, and 410 are provided for measuring the temperature of chamber 390.

Unlike device 200, however, device 300 does not use capillary electrophoresis for DNA detection. Instead, device 300 is intended to be used with a molecular probe array, such as shown in Figure 2 and described above. Specifically, device 300 is provided with an outlet port 412, to allow transfer of the amplified DNA products from device 300 to the molecular probe array. Outlet port 412 is defined

by a via 414 formed into layer 348. A channel 416, formed into layer 442, and vias 418 and 420, formed into layers 344 and 346, along with via 414, define a fluid passageway from chamber 390 to outlet port 412.

Preferably, a capillary stop 422 is provided in the fluid passageway between chamber 390 and outlet port 412. In this way, during the PCR process conducted in chamber 390, fluid does not flow past capillary stop 422. However, if a sufficient pressure is applied to the fluid, it is able to flow through capillary stop 422 and exit device 300 through outlet port 412.

Capillary stop 422 may comprise a region of hydrophobic material formed into layer 344 surrounding via 418. The hydrophobic material can be a glass-ceramic material, preferably containing the humite mineral norbergite ($Mg_2SiO_4 \cdot MgF_2$) as a major crystal phase. This material is described in U.S. Patent No. 4,118,237, which is incorporated herein by reference. Thick-film pastes containing particles of these hydrophobic glass-ceramic materials may be added to define capillary stop 422.

In an additional preferred embodiment, the invention provides methods and apparatus for performing biological reactions on a substrate layer having a multiplicity of biologically reactive sites disposed thereon. The invention comprises a microfluidic reaction apparatus having one or more individual reaction chambers in direct communication with a biochip, preferably comprising one microarray of oligonucleotide probes, corresponding to each reaction chamber, disposed on the surface of the substrate, wherein each probe is anchored to the substrate by a polyacrylamide gel pad. The apparatus is advantageously used for performing multiple, parallel, thermally controlled biological reactions, most preferably hybridization reactions. Use of the reaction apparatus of the present invention, however, is not limited to DNA hybridization or thermally-controlled biological reactions. Those skilled in the art will recognize various additional uses for the apparatus. For example, the amplification of nucleic acids or the addition of labels to nucleic acids generally results in the presence of various unwanted components in the sample fluid, e.g., unincorporated nucleotides, enzymes, or DNA molecules that are of no interest. With this apparatus, probes can be used to capture nucleic acids of interest and allow the reaction by-products to be washed out of the reactor.

These embodiments are illustrated in Figures 13-25 and in Examples 3 and 4. Figure 13 is an exploded perspective view from the upper side of a preferred embodiment of the present invention, illustrating the relationships between the various components. In this embodiment, the apparatus comprises a base plate **1532** having a first surface, a second surface, a first cavity **1540** comprising four well structures **1534** disposed in the first surface, and a second cavity **1541** disposed in the first surface. A biochip **1520** having a first surface containing a plurality of biologically reactive sites is

inserted in the apparatus such that the biochip is removably seated in the second cavity **1541** and the first surface of the biochip is in direct communication with the first cavity **1540**. Each well structure **1534** includes a groove **1536** for seating an O-ring **1548** between the biochip **1520** and the base plate **1532**, wherein the O-ring **1548** defines a reaction chamber **1530** between the biochip **1520** and the base plate **1532**. As will be appreciated by those in the art, other sealing structures can be used, for example gaskets of rubber and silicon, etc. A first fluid port **1538** and a second fluid port **1539** extend through base plate **1532** into each well structure **1534**. A port seal **1546** can be removably applied to the second surface of base plate **1532** to temporarily close fluid ports **1538** and **1539**, thereby isolating the contents of reaction chamber **1530** from the environment.

Biochip **1520** comprises one or more microarrays **1524** of biologically reactive sites **1526** disposed on a first surface of the substrate **1522** facing a first surface of the base plate **1532**. A compliance layer **1550** is permanently affixed in a cavity **1560** in compression plate **1554**, and the compression plate **1554** is then removably seated on base plate **1532**, thereby removably locking substrate **1522** into base plate cavity **1540**.

The assembly is locked together with retaining plate **1562** and retaining pins **1572**, having a body **1574**, a neck **1576**, and a head **1578**. The body **1574** of each retaining pin **1572** is press fit into a pin aperture **1544** disposed along the perimeter of base plate **1532**. Retaining pin body **1574** extends through a corresponding pin aperture **1556** in compression plate **1554**. The neck **1576** and head **1578** of retaining pin **1572** extend through a corresponding pin aperture **1566** in retaining plate **1562**. The retaining pin aperture **1566** in retaining plate **1562** comprises a substantially circular main section **1568** configured to accept the diameter of pin head **1578**, and a notch **1570** extending from the main section **1568** configured to accept the diameter of pin neck **1576**, but smaller than the diameter of pin head **1578**.

Figure 14 is an exploded perspective view from the lower side of reaction apparatus **1528**, illustrating the orientation of biochip **1520** in relation to base plate **1532**. Figure 15 is a perspective view from the upper side of apparatus **1528**, illustrating apparatus **1528** as assembled. Figure 16 is a perspective view from the lower side of apparatus **1528**, illustrating the relationship of sealing member **1546** to base plate **1532**.

Figure 17 is an enlarged partial view of apparatus **1528**, illustrating details of base plate **1532** and the relationship of retaining pins **1572** to base plate **1532**. Base plate **1532** is most preferably 5 millimeters thick, 44 millimeters wide, and 82 millimeters long, and comprises two notches **1542**, six

pin apertures **1544**, first cavity **1540**, second cavity **1541**, and well structures **1534**, each having an O-ring groove **1536**, and first and second fluid ports **1538** and **1539**. The base plate material is preferably thermally conductive in order to conduct heat from heating element **1582** to the fluid inside each reaction chamber **1530**. The conductivity of the base plate material is most preferably selected to provide for alteration of the fluid temperature by at least 2 degrees centigrade per second over a range from zero degrees centigrade to 100 degrees centigrade. The base plate material is preferably titanium, copper, aluminum, ceramic, or any other material having similar mechanical and thermal properties that will not introduce gas bubbles into the reaction chamber by outgassing, and most preferably is grade 2 commercially pure titanium.

Optional base plate notch **1542** is located on either end of base plate **1532** as shown in Figure 13, 14, 15, and 16. Notch **1542** is configured to allow laboratory technicians to easily remove a biochip **1520** with their fingers, and is most preferably 20 millimeters wide and extends laterally most preferably 4 millimeters into base plate **1532**.

Base plate second cavity **1541** is most preferably 25 millimeters wide, 75 millimeters long, and 1 millimeter deep. Each dimension of cavity **1541** is slightly larger than the corresponding size of biochip **1520** to ensure minimum play of biochip **1520**.

In an alternative configuration, biochip **1520** is permanently affixed to the base plate **1532**, thus forming a single integrated component.

Each pin aperture **1544** is disposed along the perimeter of base plate **1532** as shown in Figure 19 and extends entirely through base plate **1532**. The pin aperture **1544** is preferably circular, having a diameter of most preferably 5 millimeters, and allows heavy press-fit around body **1574** of retaining pin **1572**.

The depth of each well structure **1534** is preferably between 25 micrometers and 150 micrometers, more preferably between 75 micrometers and 150 micrometers, and most preferably between 100 micrometers and 150 micrometers. The depth selected is critical for developing the capillary action required to avoid gas bubble formation upon introduction of fluid into each reaction chamber **1530**. It is also critical to minimize the depth of well structure **1534** in order to correspondingly reduce the volume of fluid required to fill reaction chamber **1530**. The volume of reaction chamber **1530** is most preferably 33 microliters when well structure **1534** is 125 micrometers deep and ports **1538** and **1539** are each 1.4 millimeters in diameter.

As shown in Figure 25, each O-ring groove **1536** is configured so that a seated O-ring **1548** completely surrounds one microarray **1524** of biologically reactive sites **1526** on biochip **1520**. As shown in Figure 22, each O-ring groove **1536** preferably comprises an oblong channel that extends most preferably 1.6 millimeters into base plate **1532** relative to the first surface of base plate **1532**. Groove **1536** has circular end portions most preferably 11.5 millimeters in diameter, measured from the center of groove **1536** to the inner perimeter of the groove, and most preferably 9.5 millimeters apart from center-to-center. The width of the groove, as shown in Figure 22, is chosen such that it makes a slight interference fit with an O-ring **1548**, and is most preferably 1.6 millimeters in the embodiment illustrated. This condition reduces the opportunity for trapped gas bubbles to form at the interface surface between each O-ring **1548** and O-ring groove **1536**. Such trapped gas bubbles could expand during heating and cause seal breach. The dimensions of groove **1536** are limited only by the size and shape of microarray **1524**. As shown in Figure 25, the boundary of each well structure **1534** extends slightly outward from the outermost perimeter of O-ring groove **1536**, allowing room for O-ring **1548** to deform during compression of biochip **1520** into the surface of second cavity **1541**, thereby forming a tighter seal between biochip **1520** and base plate **1532**.

A first fluid port **1538** is located in the well structure **1534** immediately adjacent to the circular end portion of the inner perimeter of O-ring groove **1536** as shown in Figure 25. A second fluid port **1539** is located in the well structure **1534** immediately adjacent to the opposite circular end portion of the inner perimeter of O-ring groove **1536**. The circular end portions of each O-ring groove **1536** provide a gradual change in flow geometry which considerably reduces the potential for bubble formation during introduction of a fluid though fluid port **1538** and removal through fluid port **1539**. End portions that are parabolic or triangular in profile, or any shape that provides a gradual change in flow geometry, could also be used to create the same effect.

Each fluid port **1538** and **1539** is intended for interfacing to pipet tip **1580** as shown in Figure 23 and has a diameter preferably between 0.25 millimeters and 1.5 millimeters, more preferably between 0.75 millimeters and 1.5 millimeters, and most preferably between 1.25 millimeters and 1.5 millimeters. Pipet tip **1582** is preferably disposable and made of polypropylene, and can interface with a standard pipettor for manual loading of the reaction chambers. Many other similar types of pipet tips are commonly available and would be useful in the present invention.

A biologically compatible outer surface coating is optionally applied to base plate **1532** and retaining pins **1572** after all retaining pins **1572** are press-fitted into each pin aperture **1544** of base plate **1532**. To enhance adhesion performance of the outer surface layer to base plate **1532**, a layer of biologically

compatible primer is optionally first applied to base plate **1532**. Preferably the surface coating is selected from fluorinated ethylene propylene (commonly known under the trademark Teflon®), gold, platinum, polypropylene, an inert metal oxide, or any material having similar biological compatibility and mechanical properties. Most preferably, the surface coating is Teflon®. The primer material is preferably Xylan®, Teflon®, polypropylene, an inert metal oxide, or any material having similar biological compatibility and mechanical properties.

Each O-ring **1548** preferably has a circular cross-section of most preferably 1.8 millimeters in diameter, and a circular profile the inside diameter of which is most preferably 14 millimeters. Preferably the O-ring material is selected from nitrile, silicone, Kalrez®, or any biologically inert material having similar size and mechanical properties, that will not introduce gas bubbles into the reaction chamber due to outgassing. Most preferably, the O-ring is made of nitrile. As shown in Figure 22, each O-ring **1548** fits into a corresponding O-ring groove **1536** in base plate **1532** such that no air gaps form between O-ring **1548** and O-ring groove **1536**. When reaction chamber apparatus **1528** is assembled correctly, each well structure **1534** allows deformation of a corresponding O-ring **1548** as shown in Figure 22.

Biochip **1520** broadly comprises substrate **1522** and one or a plurality of microarrays **1524** disposed on a first surface thereof. In a preferred embodiment, biochip **1520** includes four microarrays **1524**. The dimensions of substrate **1522** are preferably between 25 millimeters wide by 75 millimeters long by 1 millimeter thick and 325 millimeters long by 325 millimeters wide by 2 millimeters thick. Most preferably, substrate **1522** is a standard soda lime glass microscope slide 25 millimeters wide by 75 millimeters long by 1 millimeter thick. Alternative substrate materials include silicon, fused silica, borosilicate, or any rigid and biologically inert glass, plastic, or metal. As shown, biochip **1520** must be oriented with the microarray **1524** bearing surface facing toward base plate **1532**. When assembled as shown, four reaction chambers **1530** are formed, each defined by a volume bounded by biochip **1520**, each O-ring **1548**, and each corresponding well structure **1534**.

As shown in Figure 25, in a preferred embodiment, each microarray **1524** has twenty seven biologically reactive sites **1526** in one direction and twenty seven in a direction normal to the first direction. As shown in Figure 18, each site **1526** contains a biologically reactive three-dimensional polymerized polyacrylamide gel structure 1527 affixed to substrate **1522**. Each gel structure **1527** is preferably cylindrical, most preferably having a 113 micron diameter and a 25 micron thickness. The distance between each site **1526** within each microarray **1524** is most preferably 300 micrometers, and the distance between each microarray **1524** is most preferably 15 millimeters. Each microarray

1524 is also preferably isolated by a polyacrylamide gel boundary **1525**. Each site **1526** could alternatively comprise biologically reactive reagents attached directly to substrate **1522**.

Optional compliance member **1550** is intended to provide a uniform distribution of clamping pressure over biochip **1520** without cracking substrate **1522**. The general size of compliance member is intended to substantially match the overall size of substrate **1522**. Compliance member **1550** is most preferably 65 millimeters long, 26 millimeter wide, and 3 millimeter thick, and is formed of a layer of pressure-sensitive adhesive disposed on a layer of low-compression material, preferably selected from silicone sponge rubber, natural sponge rubber, neoprene sponge rubber, or any material having similar mechanical properties. Compliance member **1550** further preferably includes four viewing ports **1552**, each of which allows visual inspection of a corresponding reaction chamber **1530** and corresponds in size and shape to the inner perimeter of each O-ring groove **1536** in base plate **1532** as shown in Figure 20. The adhesive layer permanently attaches compliance member **1550** to cavity **1560** of compression plate **1554** as shown in Figure 20.

Compression plate **1554** is most preferably 44 millimeters wide, 69 millimeters long, and 4 millimeters thick. Compression plate **1554** is preferably formed of fluorinated ethylene propylene, acetal resin, polyurethane, polypropylene, acrylonitrile-butadiene-styrene (ABS), or any material having similar mechanical properties, and is most preferably formed of Teflon. Compression plate **1554** further preferably includes six retaining pin apertures **1556**, four viewing ports **1558**, and cavity **1560**. Retaining pin apertures **1556** corresponding to the six retaining pins **1572** in base plate **1532** are located around the periphery of compression plate **1554** and pass entirely through compression plate **1554** and as shown in Figure 13. The pin apertures **1556** are most preferably 5.5 millimeters in diameter. Each viewing port **1558** allows visual inspection of a corresponding reaction chamber **1530** and corresponds in size, shape, and location to each corresponding viewing port **15 52** in compliance member **1550** as shown in Figure 20. Compression plate cavity **1560** is most preferably 2.2 millimeters deep, 26 millimeters wide, and 65 millimeters long, and is configured to contain compliance member **1550** with minimum play.

Retaining plate **1562** is most preferably 44 millimeters wide, 69 millimeters long, 1.5 millimeters thick. The retaining plate **1562** is preferably stainless steel, copper, aluminum, titanium, or any material having similar mechanical properties, more preferably is stainless steel, and most preferably is 300 series stainless steel. Retaining plate **1562** further preferably comprises four viewing ports **1564** located around the periphery of retaining plate **1562** and six retaining pin apertures **1566**, all of which pass entirely through the thickness of retaining plate **1562**. Each viewing port **1564** allows visual

inspection of a corresponding reaction chamber **1530** and corresponds in size, shape, and location to each corresponding viewing port **1558** in compression plate **1554**. Each retaining aperture **1566** further includes a main section **1568** that is substantially circular and a notch **1570** extending from the main section **1568**. Each main section **1568** is most preferably 5.5 millimeters in diameter, allowing a pin head **1578** to pass through. Each notch **1570** is most preferably 2.2 millimeters in diameter, having a center 4 millimeters from the center of the corresponding main section **1568** as shown in Figure 13.

As shown in Figure 20, each retaining pin **1572** is generally cylindrical and is formed of stainless steel, aluminum, titanium, ceramic, or any material having similar mechanical properties. More preferably, retaining pin **1572** is stainless steel, and most preferably is 300 series stainless steel. Retaining pin **1572** preferably comprises body **1574**, neck **1576**, and head **1578**. Body **1574** has a circular cross section most preferably 5 millimeters in diameter and is most preferably 7.5 millimeters long. Body **1574** is designed specifically to be press-fitted into a pin aperture **1544** such that the end of body **1574** is flush to the outer surface of base plate **1532**. Alternatively, retaining pins **1572** could be an integral molded portion of base plate **1532**. Substrate **1522** could also be clamped to base plate **1532** using standard fasteners including screws in place of retaining pins **1572**. In large throughput embodiments, an automated clamping mechanism could be used to simultaneously clamp one or more substrates **1522** to a base plate **1532**.

Pin neck **1576** has a circular cross-section most preferably 2 millimeters in diameter and 3 millimeters long and is designed specifically to engage notch **1570** in the retaining pin aperture **1566** of retaining plate **1562**. Head **1578** has a circular cross-section most preferably 5 millimeters in diameter and is most preferably 2 millimeters long.

Port seal **1546** is most preferably 52 millimeters long, 24 millimeters wide, 0.1 millimeters thick, and comprises a layer of thermally conductive material having a biologically inert pressure-sensitive adhesive backing attached thereto. The conductivity of port seal **1546** is preferably selected to allow alteration of the fluid temperature by heating element **1582** at a rate of at least 2 degrees centigrade per second over a range from zero degrees centigrade to 100 degrees centigrade. Most preferably, the thermally conductive material is aluminum foil. After reaction chamber apparatus **1528** is assembled and loaded with fluid, port sealing member **1546** is temporarily affixed to base plate **1532** such that it completely seals off all ports **1538** and **1539** as shown in Figure 16.

Heating element **1582** heats reaction chamber apparatus **1528** by conduction directly through port sealing member **1546** and base plate **1532**, and preferably is capable of altering the temperature of fluid inside each reaction chamber **1530** by at least 2 degrees centigrade per second over a range from zero degrees centigrade to 100 degrees centigrade. The embodiment describe herein is intended to interface with a flat block style Alpha Module heating element and a corresponding PTC-220 DNA Engine Tetrad available through MJ Research, Inc. as shown in Figure 24, although many other types of thermal cycling systems that provide conductive or convective heating could be used.

The preferred embodiment of the reaction apparatus is assembled as follows. Retaining pins **1572** are press-fit into base plate pin apertures **1544**. A layer of primer is then applied to base plate **1532** containing retaining pins **1572**, followed by a layer of biologically compatible surface coating. The substrate is then positioned in base plate cavity **1540**, with the surface containing the microarrays **1524** of biologically reactive sites **26** facing the first surface of the base plate **1532**. Compliance layer **1550** is permanently affixed in compression plate cavity **1560** by application of the adhesive layer to the compression plate **1554**. The pin apertures **1556** in compression plate **1554** are aligned with the retaining pins **1572**, and compression plate **1554** is then seated on base plate **1532**. The main sections **1568** of retaining pin apertures **1566** in retaining plate **1562** are aligned with retaining pin heads **1578,** retaining plate **1562** is seated on compression plate **1554**, and retaining plate **1562** is then compressed towards base plate **1532** such that pin head **1578** extends above retaining plate **1562**. Retaining plate **1562** is shifted laterally such that notch **1570** engages each corresponding pin neck **1576**. Other methods of temporarily locking the compression plate to the base plate, including the use of an external clamp around the base plate and the compression plate or a layer of adhesive between the base plate and the compression plate, could also be used.

The reaction chambers **1530** are loaded by inserting pipet tip **1582** into first fluid port **1538** as far as is necessary to create a seal between tip **1582** and port **1538**, and then slowly introducing fluid into the corresponding reaction chamber **1530** using a standard pipettor. Second fluid port **1539** allows air to escape as fluid enters reaction chamber **1530** through first port **1538**. Pipet tip **1582** is removed from first port 38 when reaction chamber **1530** and second fluid port **1539** are completely loaded with fluid. If substrate **1522** is visually transparent, each reaction chamber **1530** may be visually inspected through each compression plate viewing port **1558** and retaining plate viewing port **1564** immediately after loading for the presence of gas bubbles. If gas bubbles are present over any microarray **1524**, the fluid loading process must be performed again, or the reaction chamber must be pressurized. Pressurization may be provided manually by inserting additional fluid through a pipet tip inserted into the first fluid port while the second fluid port is sealed, or may be provided automatically by use of a

pump and tubing attached to the first fluid port. Preferably the chamber is pressurized to between 27 and 207 kPa (4 and 30 psi), more preferably between 55 ad 69 kPa (8 and 10 psi), and most preferably to about 55 kPa (8 psi). Any other gas bubbles including those away from the edges of any microarray **1524**, especially those near ports **1538** and **1539**, are harmless and can be ignored. After inspection, port seal **1546** is affixed to the lower surface of base plate **1532** by applying the pressure-sensitive adhesive side of the port seal port **1546**.

Once assembled, the reaction chamber apparatus **1528** is placed onto heating element **1584** as shown in Figure 24, and thermal cycling is commenced. Upon completion of the reaction, reaction chamber apparatus **1528** is removed from heating element **1584**, port seal **1546** is removed, retaining plate **1562** and compression plate **1554** are removed by following the corresponding assembly steps in reverse, and finally biochip **1520** is removed.

Although the detailed description and operational description previously recited contain many specific details, these should not be construed as limitations on the scope of the invention, but rather as an exemplification of one preferred embodiment thereof. Those with skill in the art will recognize the generality of the exemplified chamber, and the capacity for the recited components as disclosed herein to be varied for any particular purpose or reaction. For example, reaction chamber apparatus **1528** could be configured to accommodate a multitude of different configurations of biochip **1520**, or apparatus **1528** could be configured to accommodate a biochip **1520** comprising two microarrays each having forty biologically reactive sites in one direction and one hundred in a direction normal to the first direction. The size of reaction chamber apparatus **1528** could be scaled to accommodate a substrate up to 310 millimeters wide, 310 millimeters long, and 3 millimeters thick. A high-throughput embodiment of reaction chamber apparatus **1528** that can accommodate a plurality of biochips **1520** is also possible.

The apparatus could be configured for automatic loading of reaction chamber **1530** by integrating an automated fluid pumping system to interface to each fluid port **1538** and **1539**. Such a pumping system would allow introduction of a plurality of fluids into each reaction chamber **1530**, and agitation and pressurization of fluids in each reaction chamber **1530**.

Alternative means for creating a sealed reaction chamber around each microarray **1524** on substrate surface **15 22** of biochip **1520** also exist. For example, well structures **1534**, O-rings **1548**, and O-ring grooves **1536** could be replaced with a single shaped gasket member made from a biologically compatible sealing material such as silicone rubber. The thickness of the gasket can easily be

selected such that when the substrate is clamped against the base plate the resulting gap between the base plate and substrate is most preferably the same as the depth of a well structure. The disposable gasket reduces the complexity of the apparatus by reducing the number of required elements and alleviates the preventive maintenance required for O-rings.

In addition to the modules outlined herein, a preferred embodiment of the invention provides devices comprising micro-gas chromatographs (MGCs) as well. As will be appreciated by those in the art, the micro-gas chromatograph may be one of several modules in a microfluidic device as outlined above, or may be the only module as part of a detection system. As such, the MCG may have one or more inlet ports, as defined herein, to receive the analyte fluid. Similarly, the MCG one or more outlet ports for releasing the analyte fluid. A stationary phase for differentially absorbing chemical components in the analyte gas is disposed within all or a portion of the MGC column, as is known in the art.

Several preferred embodiments of the MCG embodiment are shown in Figures 26-29. Shown in Figure 26 is a micro-gas chromatography system 2010, in accordance with a preferred embodiment of the present invention. A carrier gas supply 2012 provides a flow of a carrier gas to a micro-gas chromatograph device 2014 via a regulator 2016 and a sample injection valve 2018. Regulator 2016 is used to adjust the flow rate of the carrier gas. Sample injection valve 2018 injects a small precise volume of sample gas from a sample gas supply 2020. Suitable sample injection valves are commercially available, such as model no. NC1500 from Redwood Microsystems, Inc., Menlo Park, California.

In accordance with the present invention, MCG device 2014 comprises a multilayered structure described in greater detail hereafter that includes a MCG column 2022. A detector 2024 is provided at the output of column 2022. Preferably, detector 2024 is an integral part of the same multilayered structure that defines column 2014. However, detector 2024 may also be an external device connected to the output of column 2022.

A data processing system 2026 reads detector 2024, preferably as a function of time, so as to obtain data indicative of the separated chemical components from the sample that pass by detector 2024. Data processing system 2026 is preferably able to store, record, and process this data, as in conventional. For example, data processing system 2026 may be based on LabVIEW data acquisition, control, analysis, and presentation software available from National Instruments Corp., Austin, Texas.

Micro-gas chromatograph device 2014, in accordance with the present invention, is made from layers of green-sheet that have been laminated and sintered together to form a substantially monolithic structure as outlined herein.

Shown in Figure 27 is a cross-sectional view of a representative micro-gas chromatograph device 2014. Device 2010 is made from green-sheet layers 2030-2050 that have been laminated and sintered together to form a substantially monolithic structure, as described above. Device 2014 includes a micro-gas chromatograph column 2060 formed into layers 2030-2050. Column 2060 extends from an inlet port 2062 to an outlet port 2064 and is preferably defined by a plurality of planar column sections connected in series by vias. For example, column 2060 in Figure 27 includes planar column sections 2066-2072 formed into layers 2032, 2036, 2040, and 2044, respectively. Vias 2074, 2076, and 2078, formed into layers 2034, 2038, and 2042, respectively, connect section 2066 to section 2068, section 2068 to section 2070, and section 2070 to section 2072, respectively. Although device 2014 is shown in Figure 27 with four planar column sections 2066-2072 for purposes of illustration, device 2014 may include a greater or fewer number of planar column sections. Column 2060 also includes an exit channel 2081, formed into layer 2048, that is connected to planar column section 2072 by a via 2080, formed into layer 2046. Finally, a via 2082, formed in layer 2030, connects planar section 2066 to inlet port 2062, and a via 2084, formed in layer 2050 connects exit channel 2081 to outlet 2064. A gas inlet tube 2086 is attached to gas chromatograph device 2014 at inlet port 2062, preferably by means of a high temperature adhesive. Gas inlet tube 2086 connects device 2014 with sample injection valve 2018.

A detector 2090, formed in layer 2050, is preferably provided to detect the separated components as they travel along exit channel 2048. Detector 2090 is most conveniently provided as a thermal conductivity detector, although other types of detectors can be used as well. One advantage of using a thermal conductivity detector is that it does not affect the sample. Thus, the sample exiting device 2014 through outlet port 2064 may be collected by another device for further analysis.

As shown in Figures 27-28, thermal conductivity detector 2090 comprises a resistor 2092 disposed in exit channel 2081 on the surface of layer 2050. Current leads 2094 and 2096 are formed into layer 2050 and connected to resistor 2092, as shown in the Figures to allow a fixed current to be applied to resistor 2092 from an external device, such as data processing system 2026. Voltage leads 2098 and 2099 are also formed into layer 2050 and connected to resistor 2092, as shown in Figures 27-28, to allow an external device, such as data processing system 2026 to measure the voltage developed across resistor 2092. Thermal conductivity detector 2090 detects changes in the chemical composition of the gas passing through exit channel 2081 as changes in the thermal conductivity of

the gas, which, in turn, is detected as changes in the resistance of resistor 2092. Resistor 2092 is preferably made of a conductor with a high temperature coefficient, such as nickel. Resistor 2092 is preferably formed by screen-printing a thick-film paste containing a conductor, such as nickel, onto green-sheet layer 2050. In this way, resistor 2092 will be sintered to layer 2050 in the finished device. Similarly, leads 2094, 2096, 2098, and 2099 are preferably provided as conductor-filled vias sintered into layer 2050.

Although detector 2090 is preferably provided a thermal conductivity detector, detector 2090 may also be a flame ionization or other detector used for gas chromatograph devices. Alternatively, the detector may be external to device 2014, connected to outlet port 2064.

Each of planar column sections 2066-2072 comprises a channel formed into a green-sheet layer in a predetermined pattern. Preferably, the channel is defined by a pattern that efficiently fills up the area available in a given layer, in order to maximize the length of the channel. A particularly preferred pattern is an interlocking spiral, as shown in Figure 30, however other patterns could also be used. With reference to Figure 30, a representative planar column section 2100 is formed into a layer 2102. Section 2100 is defined by a channel 2104 extending from an input port 2106 to an output port 2108. Channel 2104 is preferably 10-40 microns wide, 80-250 microns deep, and 0.1 to 1.0 meters long. Channel 2104 may be formed by any of the techniques described herein for texturing green-sheet layers, such as embossing or punching. Accordingly, channel 2104 may take up all of the thickness or only part of the thickness of green-sheet layer 2102. Most of the length of channel is defined by an interlocking spiral pattern 2110. The analyte gas, containing the sample gas and the carrier gas, enters section 2100 through input port 2106. The gas flows through channel 2104 into spiral 2110, where it is directed in a spiral path toward the center and then back to the edge of spiral 2110. The gas then exits section 2100 through output port 2108.

Input port 2106 and output port 2108 are typically connected through vias formed in the layer above and the layer below layer 2102 so as to interconnect section 2100 with other portions of the gas-chromatograph column formed in other layer. For example, section 2100 in Figure 29 may correspond to planar column section 2070 of device 2014, shown in Figure 27, in which case input port 2106 would be connected to via 2076 and output port 2108 would be connected to via 2078. In this way, multiple planar column sections may be interconnected in series to provide the desired length and , thus, separation efficiency, of the micro-gas chromatograph column.

Preferably, column 2060 is filled with a porous ceramic plug 2120 along most of its length. For example, in device 2014 shown in Figure 27 planar sections 2066-2072, vias 2074-2080, and part of

exit channel 2081 are filled with porous ceramic plug 2120. Typically, detector 2090 is located in a part of exit channel 2081 not filled with porous ceramic plug 2120, as shown in Figure 27. Although ceramic plug 2120 is shown in Figure 27 as one continuous length for purposes of illustration, it may alternatively be made up of discrete lengths. For example, ceramic plug 2120 may fill only planar column sections 2066-2072, instead. Porous ceramic plug 2120 is preferably made of alumina or glass, with pore sizes of about 10 to 40 microns. Porous plug 2120 is preferably formed by applying a thick-film paste, as described above, to the channels formed into the green-sheet layers defining column 2060. In this way, plug 2120 will become sintered into device 2014 with the desired porosity.

Column 2060 is also filled with a stationary phase for adsorbing the chemical components of the sample, as described above. Typical materials that can be used for the stationary phase include phenyl-methyl polysiloxane. In conventional gas chromatograph columns, the stationary phase simply coats the walls of the column. However, with the provision of ceramic plug 2120 into column 2060, the stationary phase coats the pores in plug 2120, thereby beneficially increasing the surface area of the stationary phase available to adsorb the chemical components. Accordingly, the addition of porous ceramic plug 2120 increases the separation efficiency of column 2060 for a given length.
Planar column sections 2066-2072 may also be provided with heaters 2130-2136, respectively, similar to the thermal modules outlined herein. In this way, each column section 2066-2072 may be heated to a different temperature so as to effect better separation in column 2060. Heaters 2130-2136 may be provided in various configurations, though in a particularly convenient configuration shown in Figure 27, heaters 2130-2136 are formed on the lower surface of layers 2030, 2034, 2038, and 2042, respectively, adjacent to the corresponding one of column sections 2066-2072 formed into the layer below. In this way, each heater 2130-2136 is in good thermal contact with its corresponding column section 2066-2072. However, layers 2034, 2038, and 2042 separate each one of heaters 2132-2136 from the other column sections so as to provide thermal isolation between column sections 2066-2072. In particular, the ceramic materials that typically make up layers 2030-2050 have a low thermal conductivity.

Figure 28, which is an axial view of the lower surface of layer 2030, i.e., the interface with layer 2032, shows heater 2130 in greater detail. Heater 2130 comprises a serpentine trace 2130 extending between a first lead 2140 and second lead 2142. Trace 2130 is preferably made by depositing, such as by screen printing, conductive material in the form of a thick-film paste onto the surface of layer 2030. Leads 2140 and 2142 are formed into layer 2030 as conductor-filled vias. The structure of heaters 2132-2136 is similar.

The following examples serve to more fully describe the manner of using the above-described invention, as well as to set forth the best modes contemplated for carrying out various aspects of the invention. It is understood that these examples in no way serve to limit the true scope of this invention, but rather are presented for illustrative purposes. All references cited herein are incorporated by reference.

EXAMPLES

EXAMPLE 1

Thermal Cycling Capability of Ceramic Microchip Device

The thermal cycling capability of the microchip device of the invention was examined as follows. A ceramic microchip device was constructed as described herein. The temperature of the device was regulated using a controller and computer as described below or by clamping the device onto a commercially available thermal cycler (MJ Research, Inc., Waltham, MA). The temperature of the device was monitored using a resistive temperature device paste (RTD; DuPont part number 5092D) having a coefficient of 3000±200 ppm/C. The microchip device was fabricated by printing the RTD paste onto the device twice in order to achieve a lower resistance value. The typical resistance of the printed RTD element on the microchip device was 300 ohm.

A multi-loop controller (MOD30ML) from Asea Brown Boveri Ltd. (ABB; Norwalk, CT; http://www.abb.com/global/usabb/usabb045.nsf?OpenDatabase&db=/Global/USABB/u) was used to perform the temperature control process. Temperature and time control was performed using a proportional integral differentiate (PID) algorithm available within the ABB controller. The software for time step and temperature setpoint control was written using "Application Builder" software purchased from ABB. This software allowed the time and temperature setpoint to be specified, modified and controlled using a personal computer. The computer graphical user interface that allowed setup and modification of PCR thermal procedures in real time (allowing flexible automation of the entire reaction) was Fix32, purchased from Intellution, Inc. This software is a general purpose automation control software that allows users to customize the graphical display. Data acquisition was done using the computer serial port, and thus needed no additional computer hardware components.

The thermal cycling capability of the microchip device was analyzed over the course of a 25-cycle experiment in which each cycle consisted of a "denaturation" step of 45 sec. at 94°C and an "annealing/extension" step of 60 sec. at 72°C. For each experiment, the well structure of the microchip device contained 1 mL of PCR mix (see Example 2) and 0.5 mL of chill-out liquid wax (MJ Research). Figures 11A-11C illustrate the thermal cycling capability of the microchip device of the

invention during a 25-cycle experiment (Figure 11A), over the course of 2 cycles in a 25-cycle experiment (Figure 11B), and over the course of 2 cycles in a 25-cycle experiment in which the microchip device was attached to a commercially available thermal cycler (Figure 11C).

The microchip device was attached to the thermal cycler as follows. A sufficient amount of mineral oil was placed on the temperature block of a thermal cycler (MJ Research) to create a thermal connection between the microchip device and the temperature block. Mineral oil was first placed on the flat temperature block, and the array containing all required samples and reagents was then placed on top of the mineral oil layer. The lid of the thermal cycler was then closed. The thermal cycler controlled time and temperature variations on the microchip array; the thermal detector of the microchip array was engaged to monitor temperature changes and rates of temperature changes on the array. The temperature data was collected from the array as described above, and is shown in Figure 11C.

The results of the performance of a PCR reaction as describe above are shown over 25 cycles (Figure 11A) and 2 cycles (Figure 11B). As shown in these Figures, the temperature set by the controller and computer compared favorably with that measured by the RTD, thus indicating that the microchip device of the present invention could be applied in for PCR amplification of nucleic acids. These results illustrate the rapid rates of temperature change that can be effected using the microchip arrays of the invention. As a consequence, the amount of time the reaction is maintained at the appropriate denaturation and annealing/extension temperatures is maximized, thus minimizing overall cycle times and reaction times.

In contrast, the data in Figure 11C demonstrated that rates of temperature change are much slower using the thermal cycler than the rates obtained using the microchip itself. Due to this intrinsic inefficiency, the thermal cycler requires more cycle time and overall reaction time to achieve the same degree of fragment amplification.

EXAMPLE 2

Polymerase Chain Reaction Amplification of *bla* on Ceramic Microchip Device

The application of the microchip device of the invention as a device for performing the polymerase chain reaction was examined as follows. A ceramic microchip device was constructed as described herein, and thermal cycling was controlled as described in Example 1.

A two-step PCR protocol was performed to amplify a 627bp fragment of the plasmid marker β-lactamase (*bla*) encoding the gene responsible for ampicillin resistance (AmpR) carried by the E. coli K12 strain, DH5α on plasmid pBluescript KS+ using a kit obtained from Perkin Elmer (Norwalk, CT). PCR was performed for a total of twenty-five cycles, where each cycle consisted of a "denaturation" step of 45 sec. at 94°C and an "annealing" step of 60 sec. at 72°C (wherein primer annealing and extension were performed at the same temperature). A 50 µL PCR reaction mixture containing *bla*-specific primers (BLA-f1 + BLA-r1, contained in the Perkin Elmer kit) was prepared according to manufacturer's instructions, and 1µL of this mixture was introduced into one of the wells of a ceramic microarray of the invention. The reaction mix in the microchip was covered with 0.5 mL of chill-out liquid and then was amplified as described in Example 1. The remaining portion of the mixture was placed in a standard PCR tube and PCR performed in a conventional thermal cycler (MJ Research). After the amplification reaction was completed, the reaction products from the microarray and the thermal cycler were analyzed by 4-20% polyacrylamide gel/Tris-borate EDTA gradient gel electrophoresis and visualized with an intercalating dye (SyBr-Green) using a Molecular Dynamics FluorImager set at 488 nm and appropriate calibration filters. Figure 12 illustrates the results obtained for the PCR amplification of *bla* using the microchip device of the present invention (Fig. 12, lane 4) and the conventional thermal cycler (Fig. 12, lanes 2 and 3; lane 2 contains 10µL of the reaction mixture and lane 3 contains 1µL of the reaction mixture). The expected *bla* PCR product (627 bp) was obtained using the microchip device, thus indicating that the microchip device of the present invention can be used for PCR amplification of nucleic acids.

EXAMPLE 3
PREPARATION, ASSEMBLY AND LOADING OF A MICROFLUIDIC REACTION CHAMBER

Six retaining pins of 300 series stainless steel were press-fitted into apertures on a grade 2 commercially pure titanium base plate containing four well structures. A layer of Xylan 8840 black primer (Whitford Worldwide) was applied to the base plate, followed by a layer of Dupont 856-200 Teflon-FEP clear. The base plate and O-rings were soaked in a 1% Alconox Solution for at least 30 minutes, then thoroughly rinsed in distilled, de-ionized water, and dried with compressed nitrogen or air to ensure proper cleaning.

A clean O-ring (Parker Seal Group, O-Ring Division, Part No. 2-015) was pressed completely down into each O-ring groove on the base plate. A soda glass microscope slide containing four 27 x 27 microarrays of polyacrylamide gel pads was then inserted into the base plate cavity such that the microarrays faced the base plate.

A low-compression silicone sponge rubber compliance layer (McMaster-Carr Supply Co., Part No. 8623K82) was affixed in the cavity of a Teflon® compression plate by application of the adhesive side of the compliance member to the cavity. The retaining pin apertures in the compression plate were then aligned with the retaining pin heads, and the plate was seated on the base plate with the compliance member seated on the microscope slide.

The pin apertures in a 300 series stainless steel retaining plate were aligned with the retaining pin heads, and the retaining plate was compressed towards the base plate such that the heads extended through and above the retaining plate. The retaining plate was then shifted laterally so that the pin necks engaged the notch of the pin aperture, thereby locking the various components of the apparatus together.

The reaction chambers were loaded by inserting a pipet tip 82 (VWR Scientific Products Corporation, Prod. No. 53510-084) into a fluid port until a seal was created between the tip the port. The reaction fluid was slowly introduced into the reaction chamber using a pipettor (Rainin Instrument Company, P-200). When the reaction chamber and the second fluid port were completely filled with fluid, loading was halted. Each reaction chamber was visually inspected for the presence of gas bubbles immediately after loading. If gas bubbles were present over any microarray, the fluid loading process was restarted. The fluid ports were then sealed by applying the pressure-sensitive adhesive side of a piece of aluminum foil tape (Beckman Instruments, Inc., Part No. 270-538620-A) to lower side of the base plate such that all fluid ports were covered.

EXAMPLE 4

DNA Hybridization and Labeling

Nucleic acid probe molecules immobilized to each site 26 are single-stranded; therefore, nucleic acid target molecules present within the sample fluid introduced to each site must also be single-stranded and contain a region complementary to the oligonucleotide probe molecules for hybridization to occur. Nucleic acids, however, naturally occur as double-stranded molecules. Directly introducing single-stranded target molecules to the single-stranded oligonucleotide probes immobilized to each site can involve several time consuming steps that require costly reagents and reduce the yield of the starting material. An additional complication arises because single-stranded target molecules are typically longer than the immobilized probe molecules, and often have regions complementary to each other along the same target molecule in addition to the region complementary to the immobilized probe molecule, which may result in hybridization of the target molecule to itself. This anomaly is commonly

referred to as a hairpin, and may preclude hybridization of the target molecule with a complementary immobilized probe molecule.

Rapid thermal cycling in reaction chamber device alleviates the problem of hairpin formation. During the thermal cycling process, the heating element first increases the temperature of reaction chamber contents to a level just below that required to cause denaturing of any properly hybridized, double-stranded target/probe molecules in the microarray. Improperly hybridized target/probe molecules in the microarray, however, are denatured at this temperature, as are any long double-stranded molecules.

The apparatus described in Example 1 is used to perform nucleic acid amplification assays as follows. As an example, oligonucleotide probe molecules are used having a sequence length corresponding to a denaturing temperature of 60 degrees centigrade. As shown in Table 1, after the apparatus is assembled, loaded and sealed, the heating element first rapidly increases the temperature of the sample fluid within each reaction chamber to 85 degrees centigrade for 2 minutes and 30 seconds, creating conditions sufficient to denature double-stranded target molecules into single-stranded target molecules free from hairpin anomalies. The heating element then rapidly decreases the temperature of the sample fluid within each reaction chamber to 60 degrees centigrade - the calculated melting temperature of the immobilized probe molecules - for 10 minutes. The region of a single-stranded target molecule complementary to an immobilized probe molecule may then hybridize to that immobilized probe molecule before the target molecule has a chance to form a hairpin or hybridize with another complementary single-stranded target molecule.

In addition to target molecules, the sample fluid contains DNA polymerase and a specific type of free nucleotide, for example a fluorescently-labeled terminating nucleotide. After the target molecules have hybridized to the immobilized probe molecules, the DNA polymerase will covalently attach the free nucleotide to the three prime terminal ends of the five prime linked immobilized probe molecules. The polymerase can synthesize, depending on sequence complementarity, a sister molecule to the target molecule by using the immobilized probe molecule as a template. This allows identification of specific nucleotide bases within the nucleic acid sequence.

As shown in Table 1, the heating element again rapidly increases the temperature of the sample fluid within each reaction chamber again to 85 degrees centigrade for 30 seconds, again creating the conditions required for denaturing of all double-stranded target molecules in reaction chamber 30. Heating and cooling steps are repeated many times to repeat the process of covalently attaching free nucleotides to as many immobilized probe molecules as possible. As shown in Table 1, this may take up to 4 hours to complete.

Step	Temperature (Degrees centigrade)	Time (min:sec)
1	85	2:30
2	85	0:30
3	60	10:00
4	Go to step 2 and repeat 20 times	N/A

Table 1.

This process can be used to query polymorphic nucleotides within a given region by using two oligonucleotide probes that are identical with the exception of a polymorphic base at the 3' terminal ends. The free nucleotides present in the sample fluid are fluorescently-labeled terminating nucleotides. When the target molecules hybridize completely with the oligonucleotide probes, the DNA polymerase is able to add exactly one fluorescent base to the probe molecule. The result can be interpreted as a digital "on/off" signal for each probe site.

An example is shown in Figure 31. In this example, a blood sample from patient A and a blood sample from patient B are contained in the sample fluid. Two oligonucleotide probes having a polymorphic base at the 3' terminal end are used to hybridize with the samples. Figure 31A illustrates complete hybridization of a region of patient A's sample with a probe having adenine as the 3' base. Figure 31B illustrates complete hybridization of a region of patient B's sample with a probe having guanine as the 3' terminal base. In each of these cases, the complete hybridization of the target with the probe, allows the DNA polymerase in the sample fluid to attach one labeled base to the probe, and the site will be "on." Figure 31C, however, illustrates an incomplete hybridization due to a base mismatch between the probe and target molecules at the 3' terminal position on the probe, where the probe contains an adenine and the target contains a guanine. In this case, the DNA polymerase will be unable to attach a labeled base to the probe, and the site will be "off."

CLAIMS

We claim:

1. A microfluidic device comprising a ceramic support comprising:
   a) at least a first sample inlet port;
   b) at least a first sample handling well comprising a least one well port;
   c) a first microchannel to allow fluid contact between said sample inlet port and said sample handling well port; and
   d) at least a first thermal module in thermal contact with said first sample handing well.

2. A device according to claim 1, wherein said ceramic support comprises a plurality of sample handling wells.

3. A device according to claim 2, wherein each of said sample handling wells comprises a thermal module.

4. A device according to claim 1, further comprising a detection module.

5. A device for performing biological reactions on a substrate layer having a surface containing a plurality of biologically reactive sites disposed thereon, comprising:
   a) a base plate having a first surface and a second surface, wherein the first surface further comprises a cavity comprising one or a plurality of wells;
   b) a compression plate removably seated on said substrate for removably affixing the substrate to said base plate;
   c) a sealing member disposed in each well structure, wherein each sealing member defines a reaction chamber between the surface of the substrate layer containing the biologically reactive sites and the first surface of the base plate;
   d) a first fluid port and a second fluid port extending from each reaction chamber to the lower surface of the base plate; and
   e) a fluid port seal for temporily closing the fluid ports and isolating the reaction chambers from the environment.

6. A method for performing biological reactions, comprising the steps of:
   a) loading a substrate having a first surface containing containing a plurality of biologically reactive sites into the apparatus of claim 5;
   b) loading a biological fluid sample into each reaction chamber of said apparatus;

c) affixing the fluid port seal to the second surface of said base plate;

d) heating the apparatus;

e) allowing the reaction to proceed to completion;

f) removing the fluid port seal;

g) removing the fluid samples from the reaction chambers; and

h) removing the substrate from the apparatus.

7. A multilayered micro-gas chromatograph device for analyzing an analyte gas comprising a plurality of chemical components, said device comprising ceramic solid support comprising a micro-gas chromatograph column comprising:

a) an inlet port for receiving said analyte gas;

b) a stationary phase for differentially absorbing chemical components in said analyte gas; and

c) an outlet port for releasing said analyte gas.

8. A device according to claim 7 further comprising a detector linked to said outlet port.

9. A device according to claim 8 wherein said detector is a thermal conductivity detector.

10. A device according to claim 8 wherein said ceramic solid support comprises said detector.

11. A device according to claim 7 wherein said ceramic solid support comprises a thermal module.

12. A device according to claim 7 further comprising:

a) a supply of a carrier gas;

b) a sample injection valve, connected to said supply; and

c) a detector linked to said outlet port.

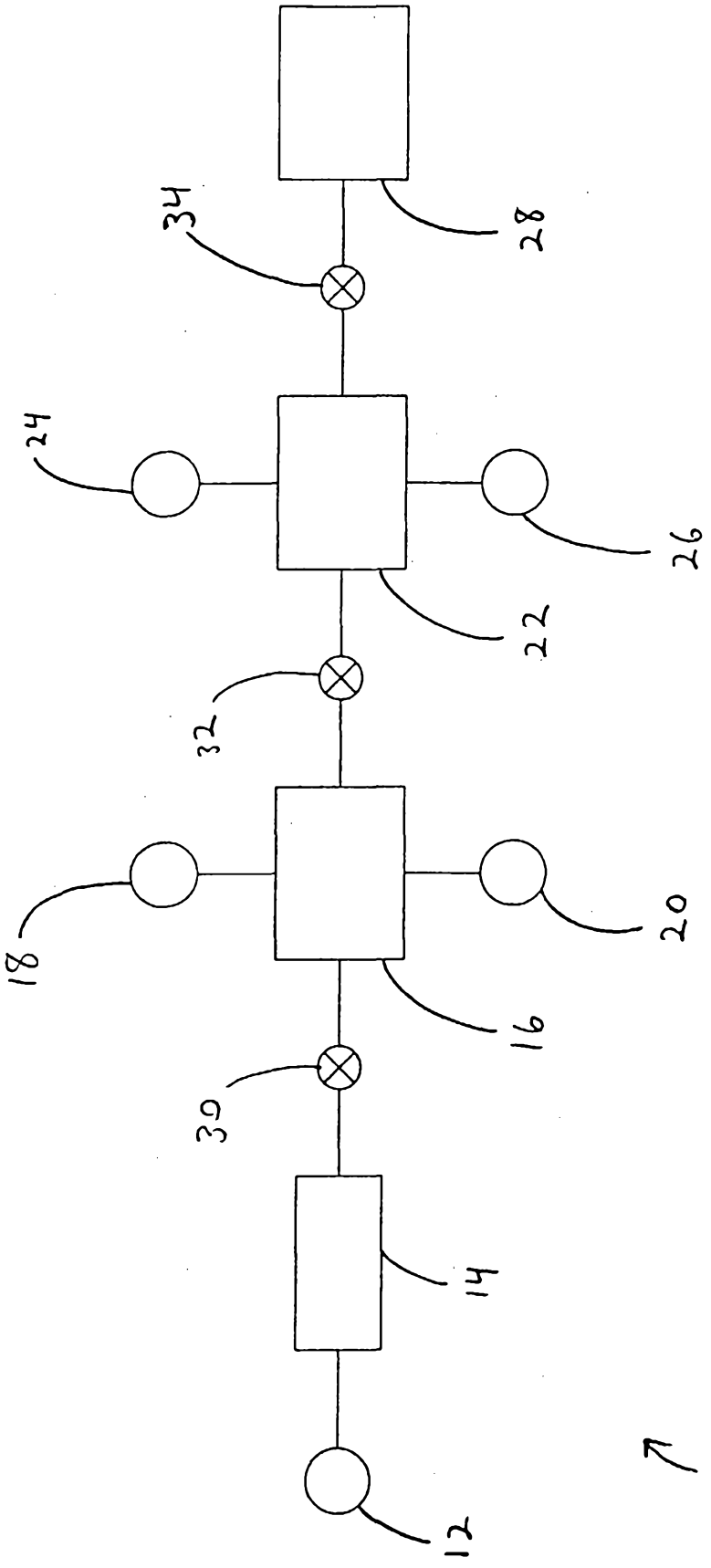

Fig. 1

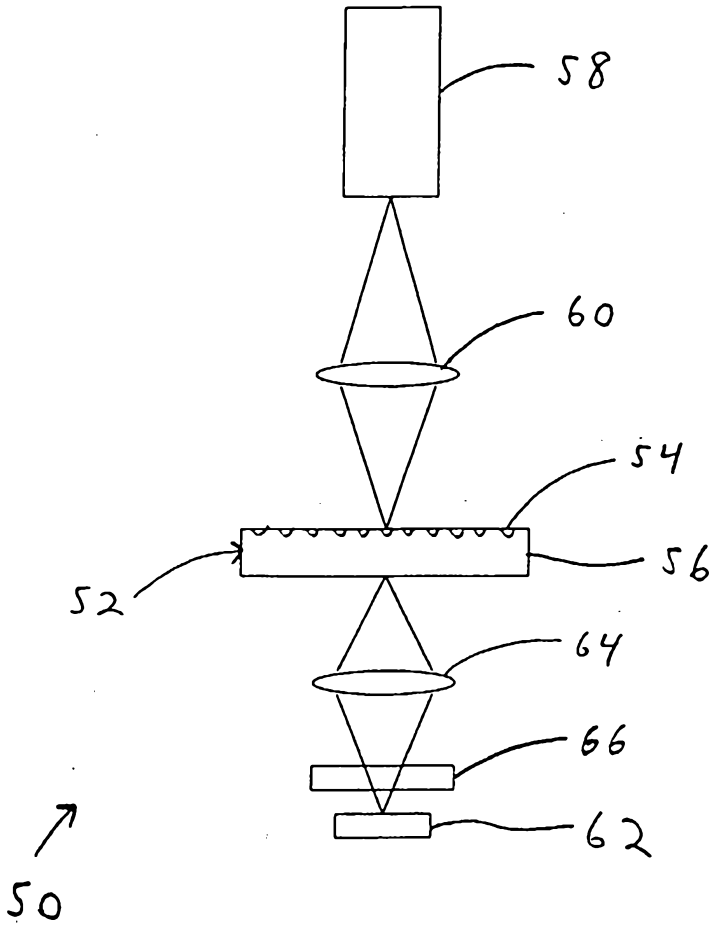

Fig. 2

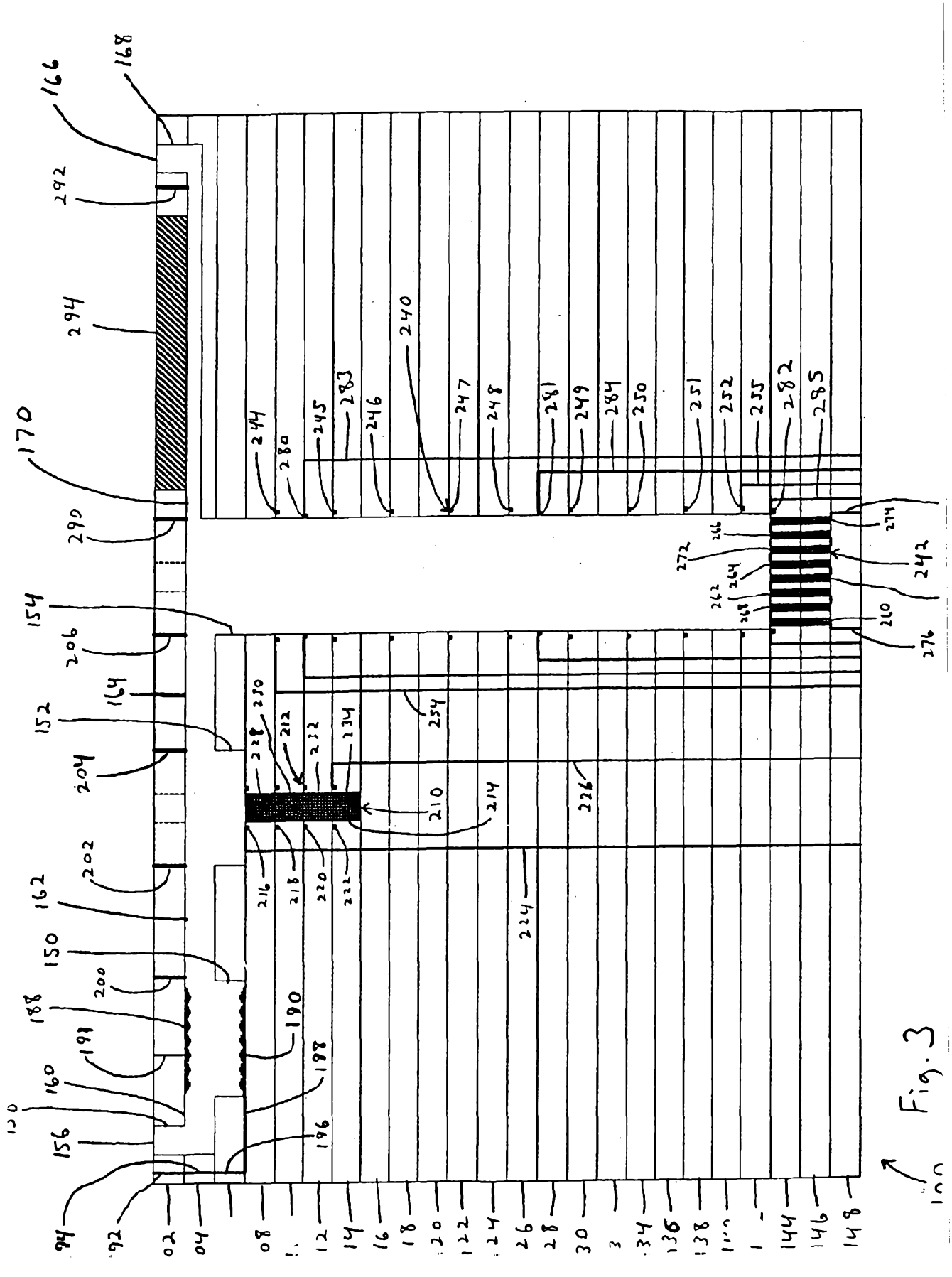
168
166
292
294
170
290
154
206
164
152
204
202
162
150
200
188
191
160
156
190
198
196
94
92
102
104
108
112
114
116
118
120
122
124
126
128
130
134
136
138
140
142
144
146
148
244
280
245
283
246
240
247
248
241
249
284
250
251
252
255
282
285
272
266
264
262
268
242
210
276
274
254
226
214
216
218
220
222
224
212
232
234
230
228

Fig. 3

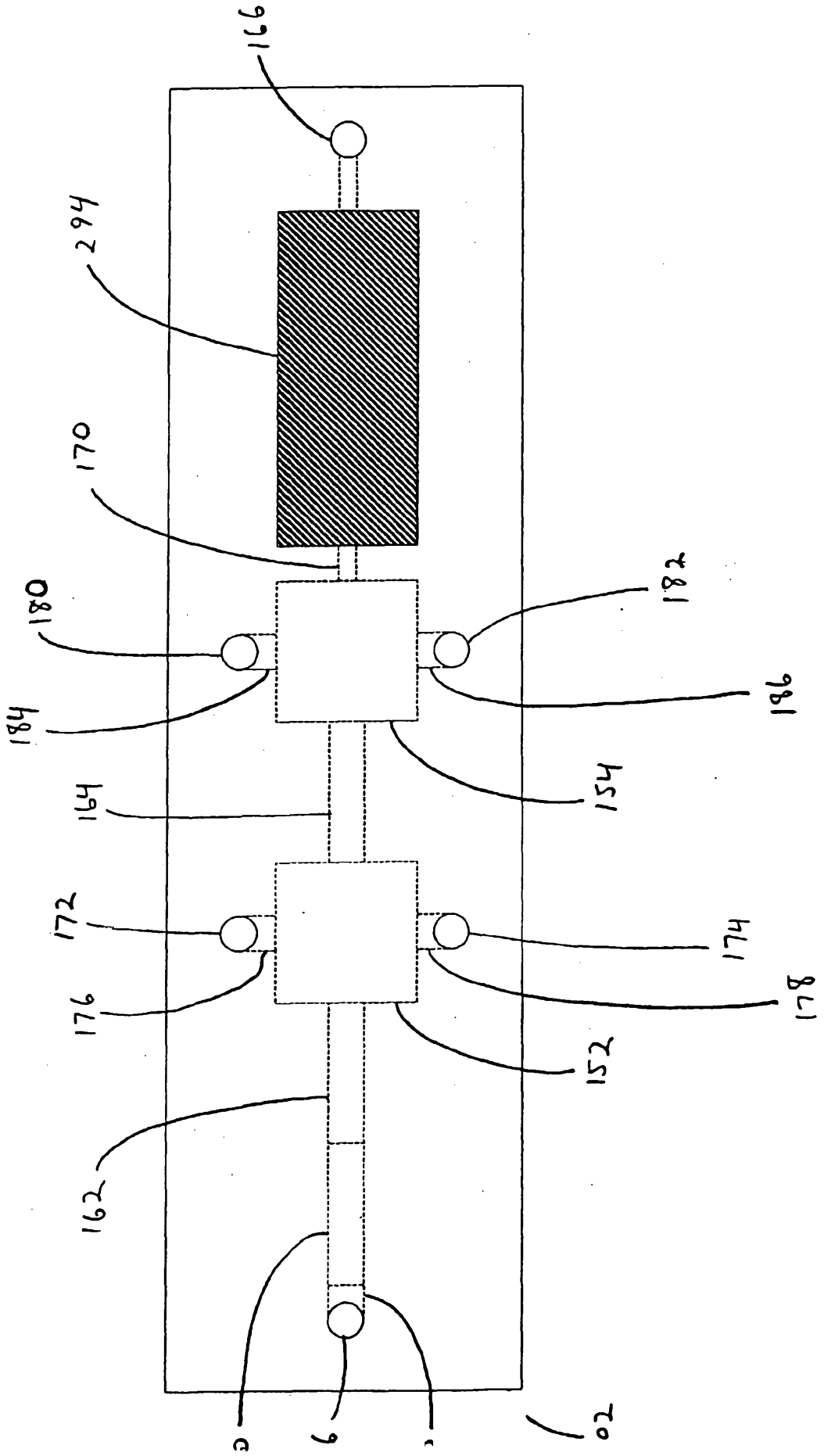

Fig. 3A

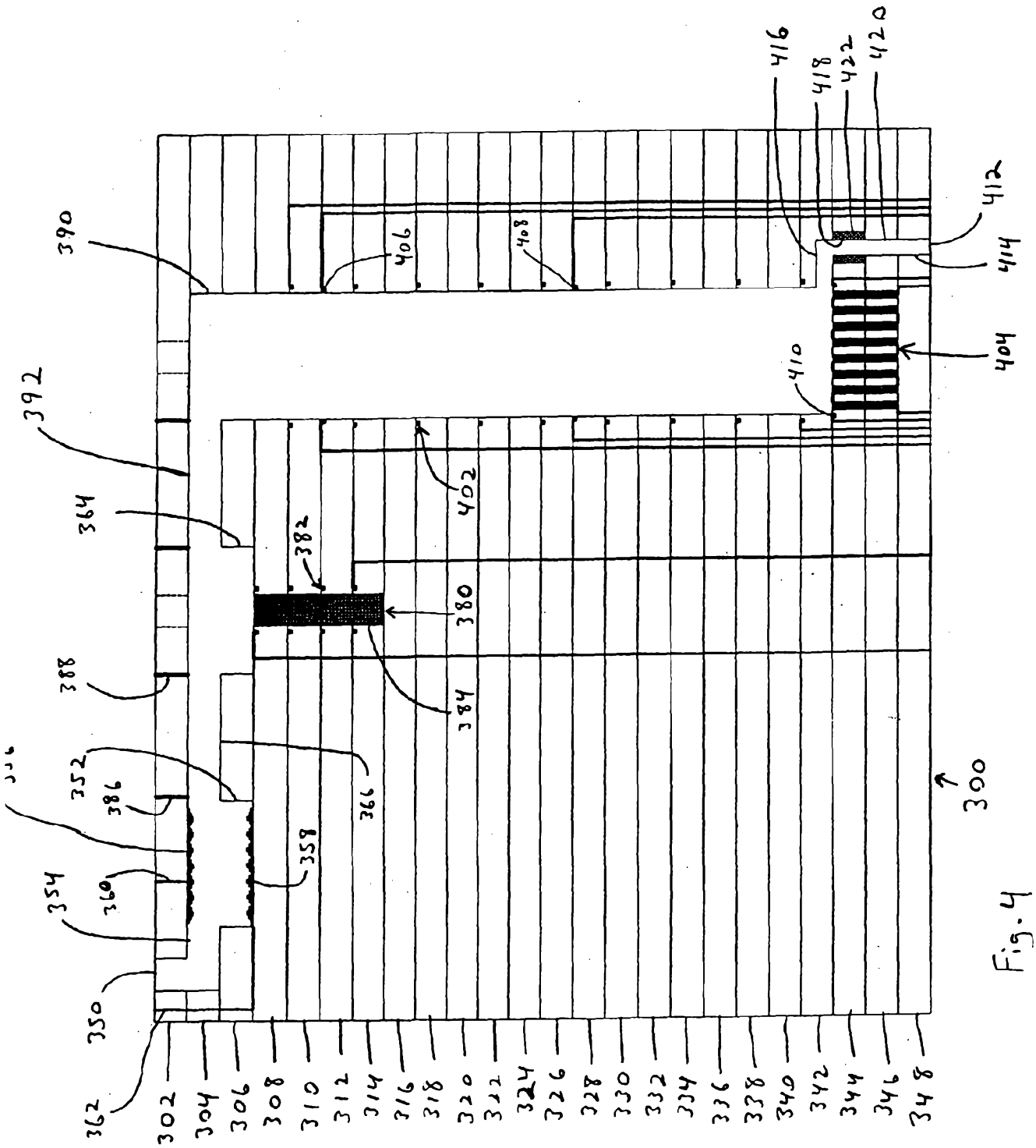
390
392
364
388
352
386
354
360
350
362
302
304
306
308
310
312
314
316
318
320
322
324
326
328
330
332
334
336
338
340
342
344
346
348
358
366
382
380
384
402
406
408
410
404
412
414
416
418
422
420
300

Fig. 4

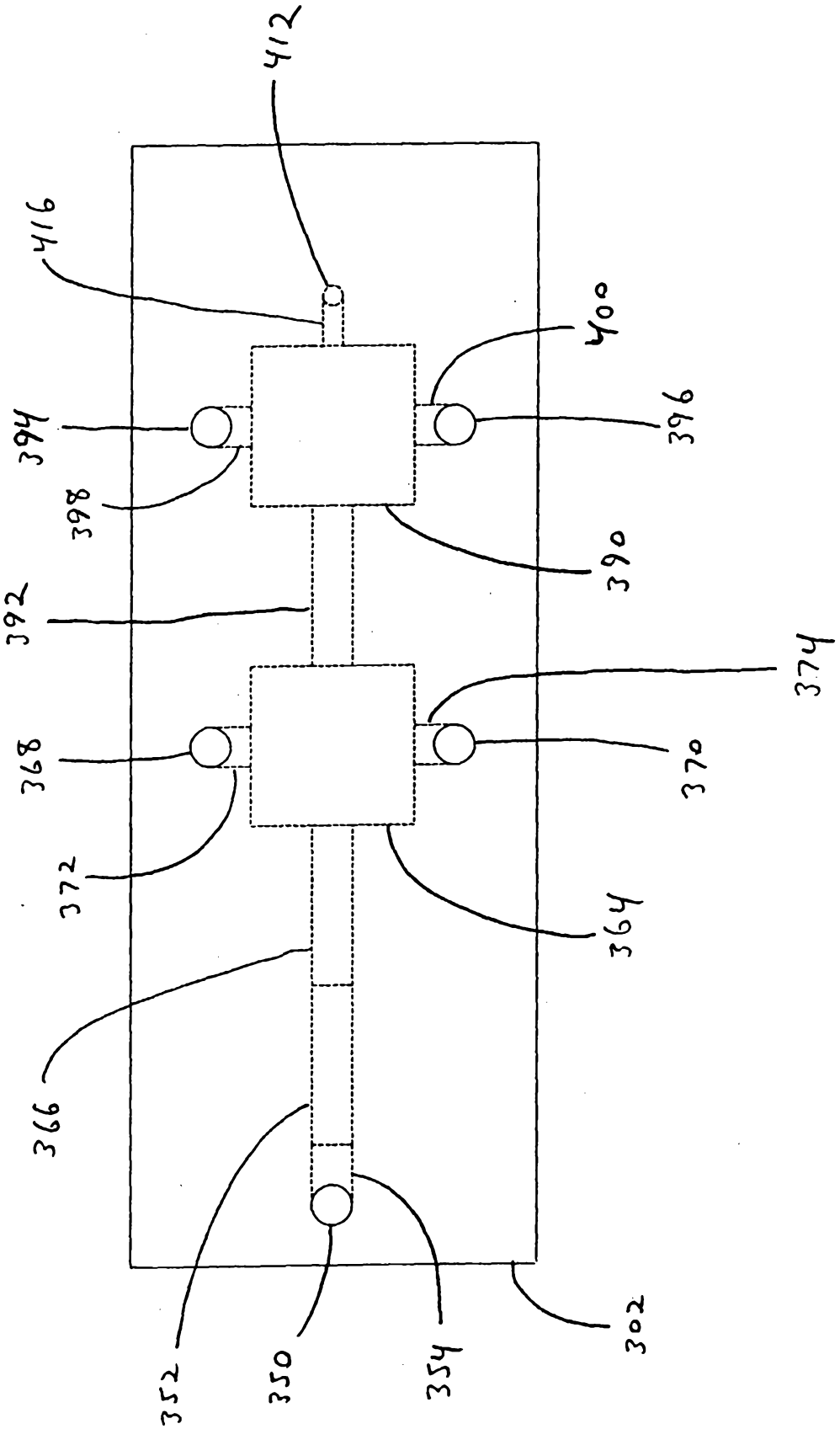
412
416
400
394
396
398
390
392
374
368
370
372
364
366
352
350
354
302

Fig. 4A

Fig. 5

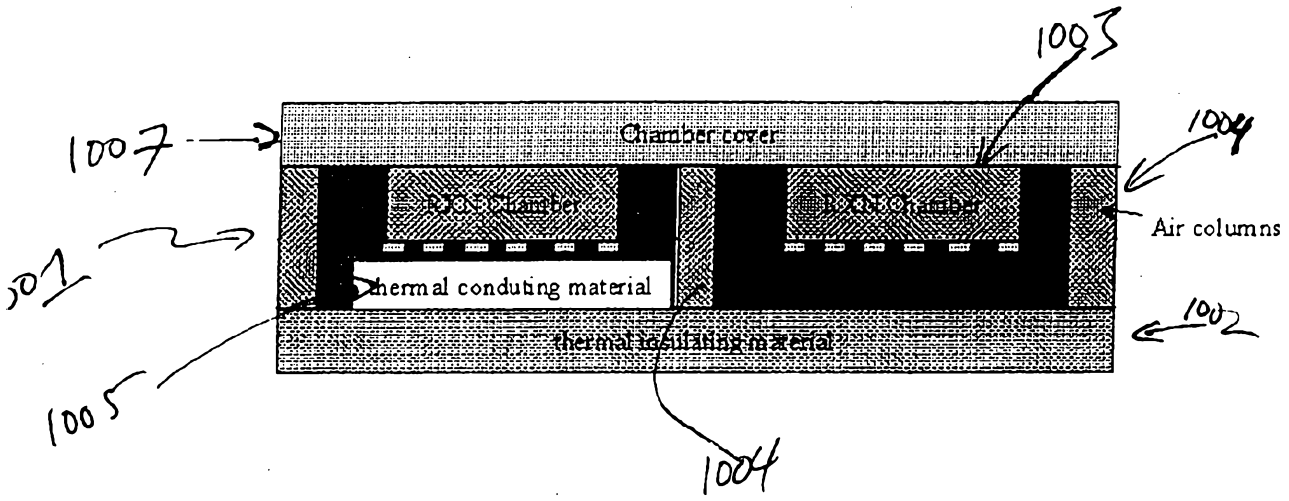
1003
1007
Chamber cover
1004
PCR Chamber
PCR Chamber
Air columns
1001
Thermal conduting material
1002
thermal insulating material
1005
1004

Fig. 6

Microchip PCR Array

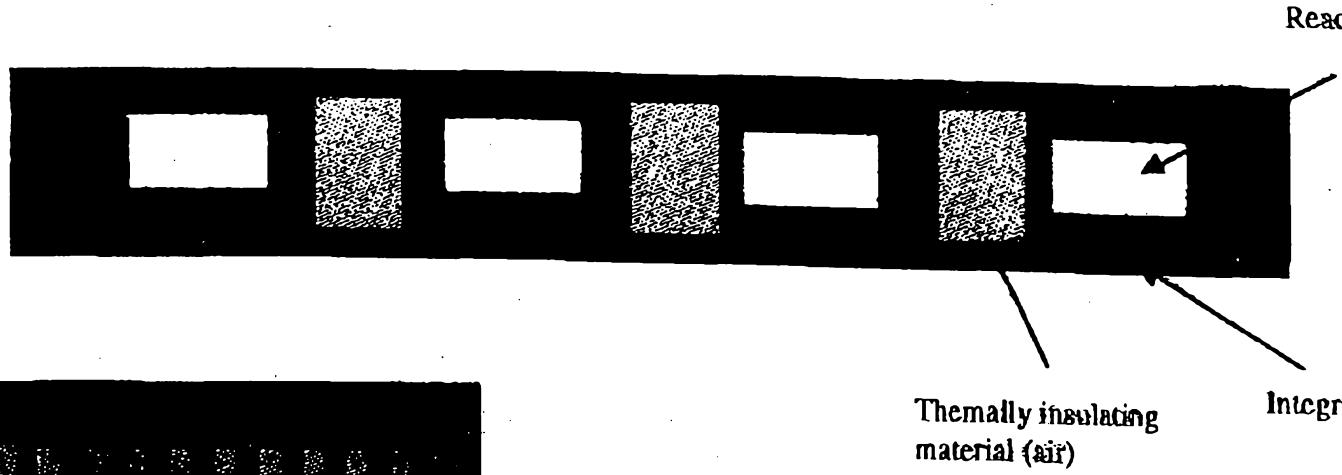

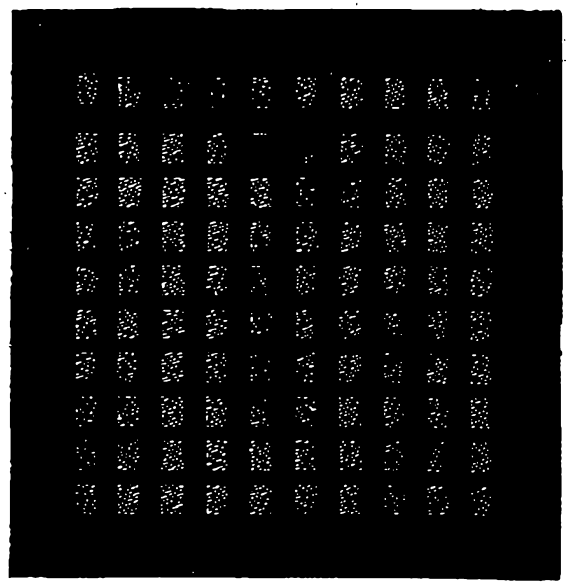

Example of column - row addressing

- **Integrated & independent heaters**
- **Multiple sample parallel testing (high throughput)**

Ceramic micro-PCR Heater Array-Final Design

4 X 4 Array of Reaction Wells
with Embedded Heaters and
an Embedded RTD

Fig. 4A 7A

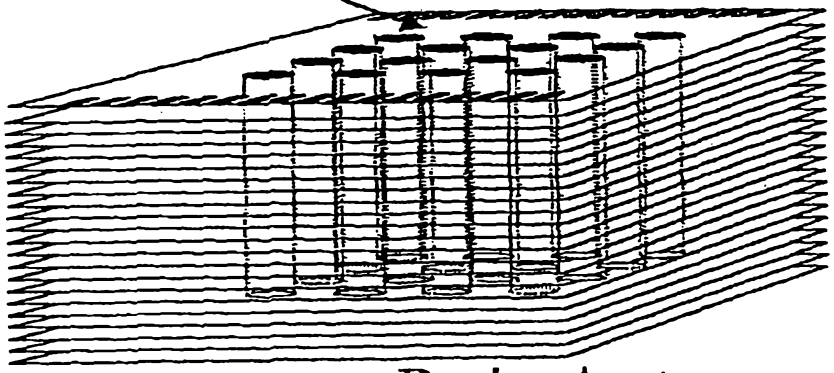

Fig. 4B 7B

Device Anatomy

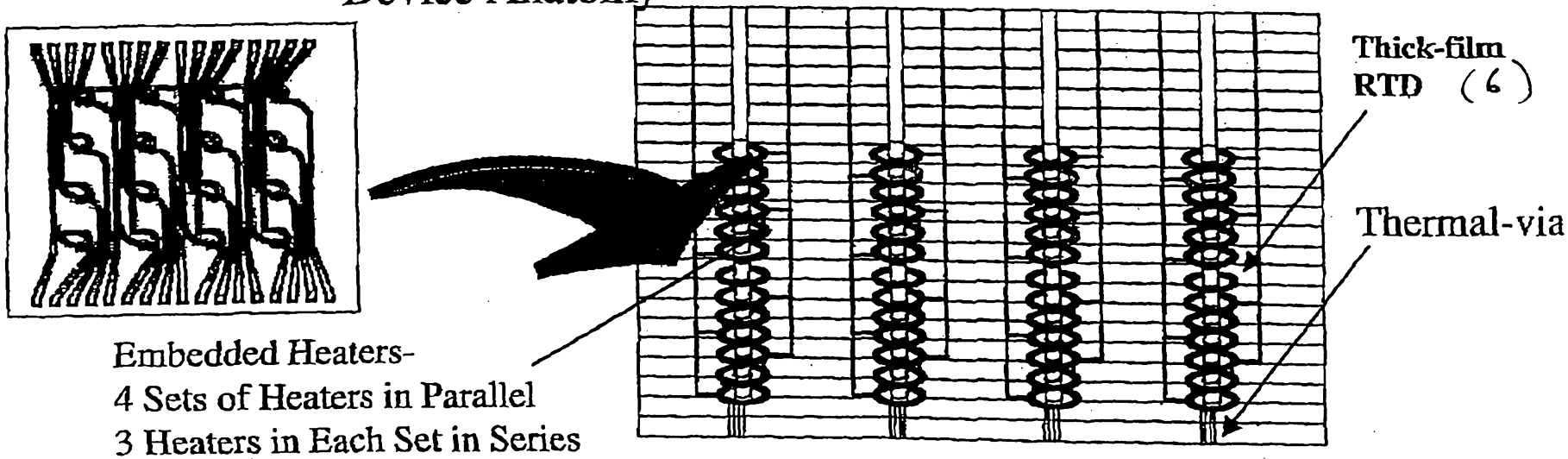

Fig. 8

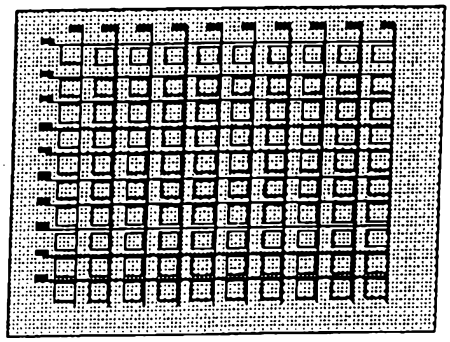

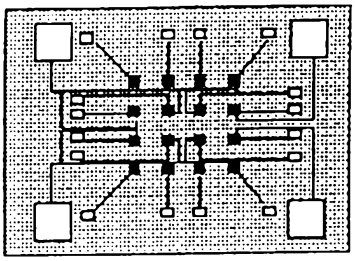

Fig. 9

Schematic of Array with Integrated Heaters with Active Cooling

Fig. 10

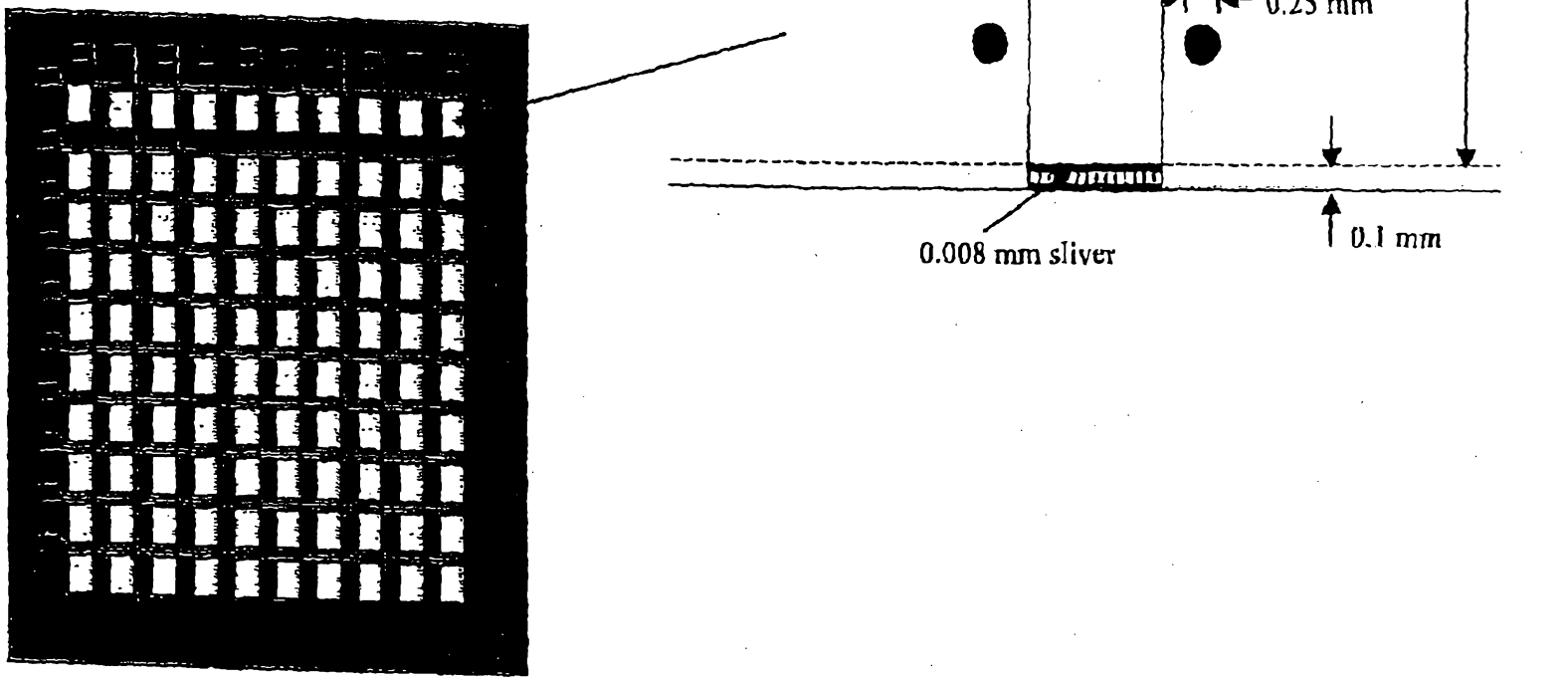

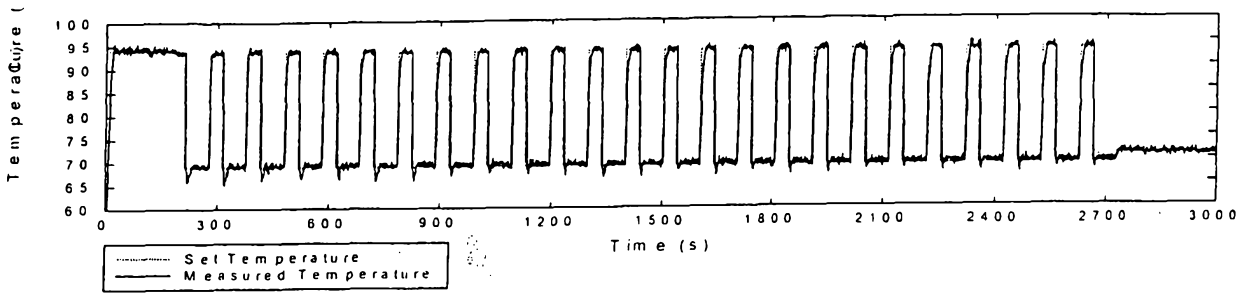

Fig. 8A 11A

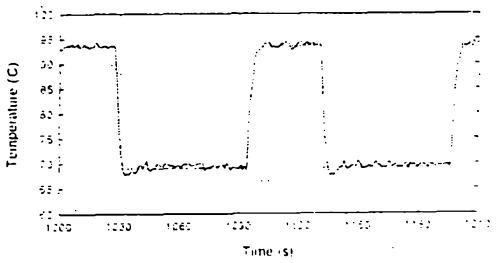

Fig. 8B 11B

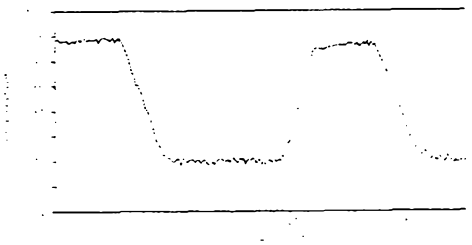

Fig. 8C 11C

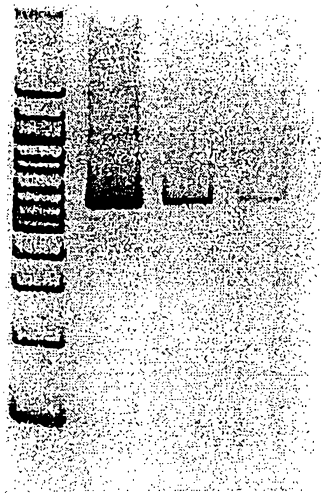

Fig. 12

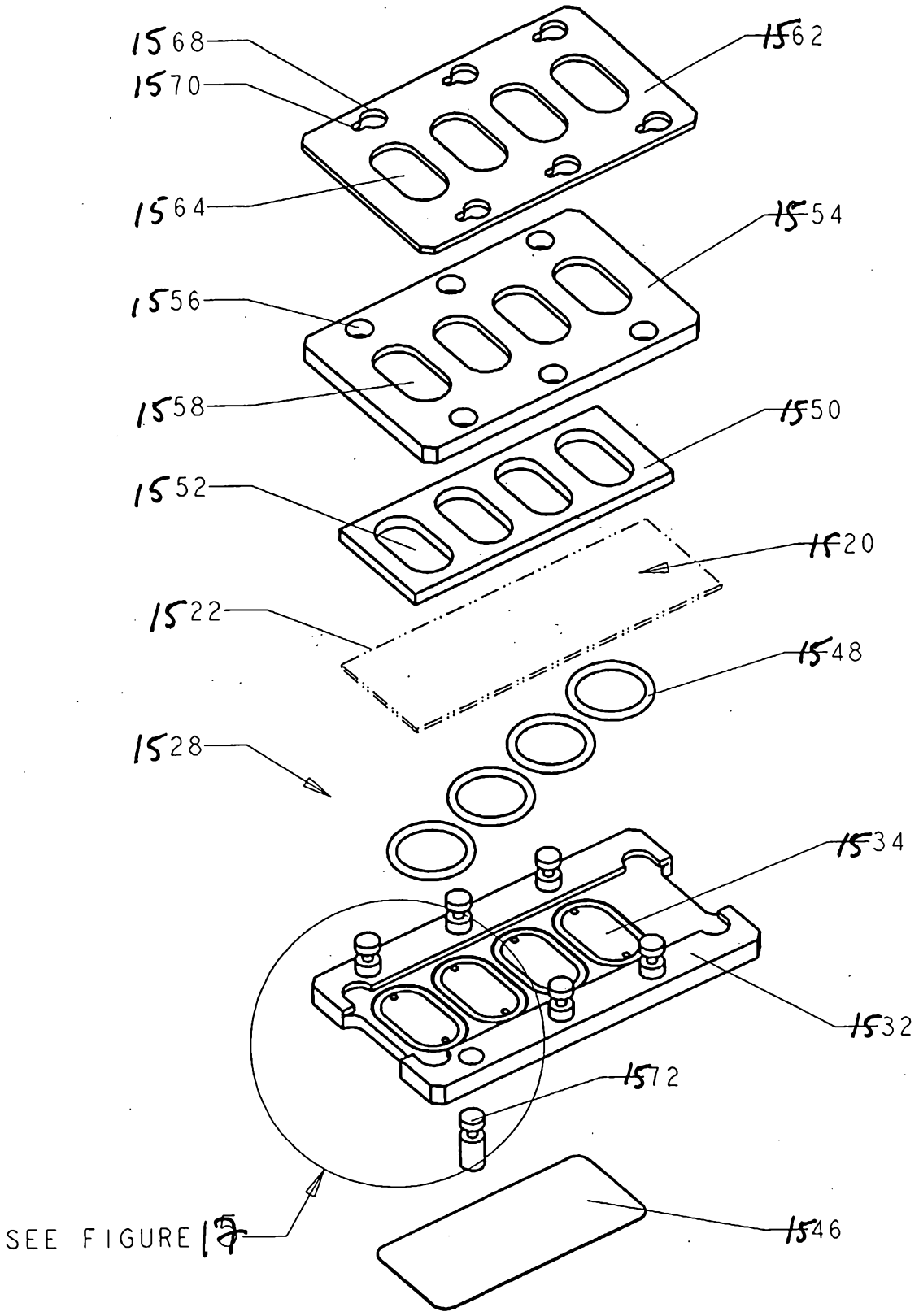
1568
1570
1562
1564
1554
1556
1558
1550
1552
1520
1522
1548
1528
1534
1532
1572
1546
SEE FIGURE 17

FIGURE 13

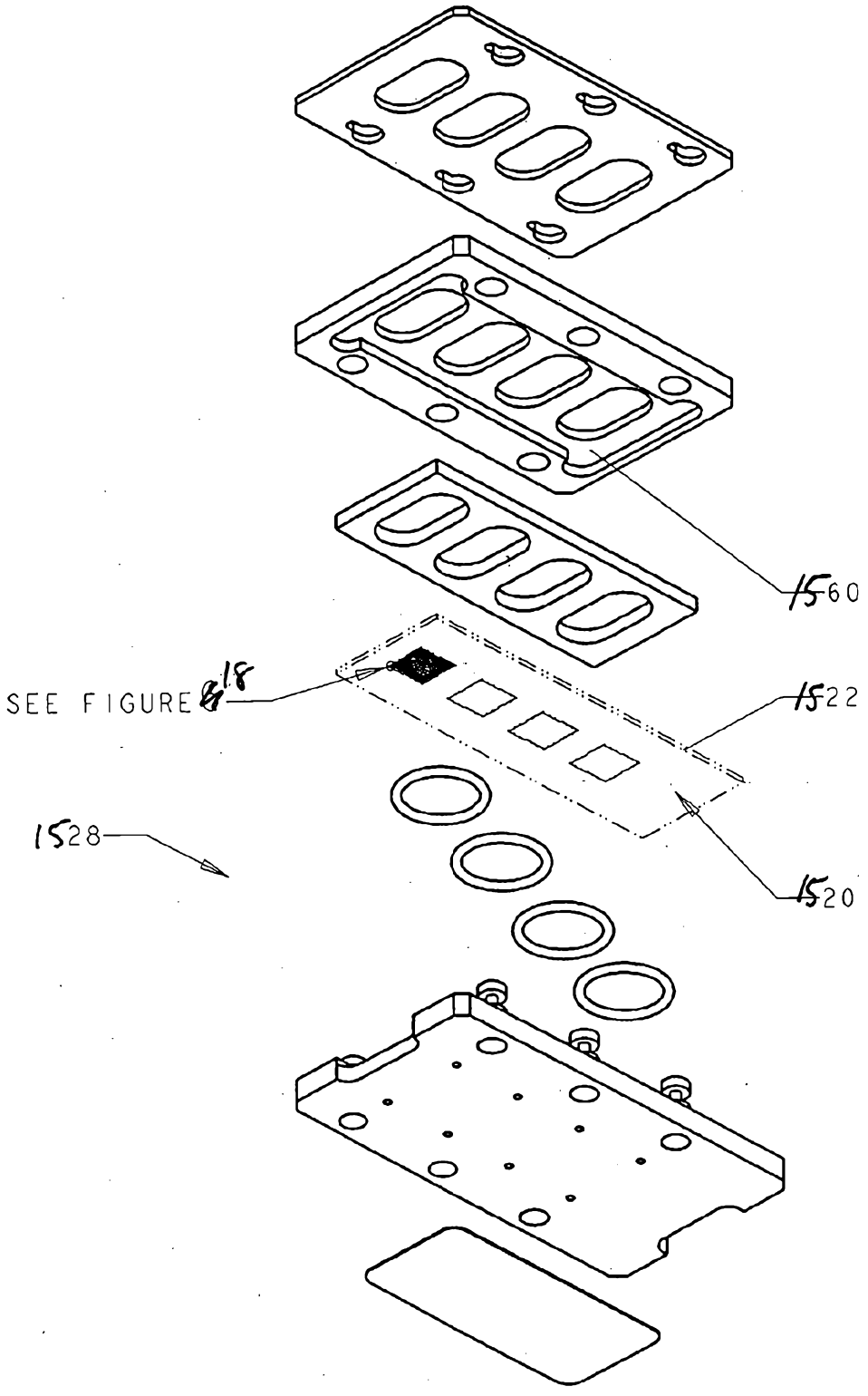

FIGURE 14

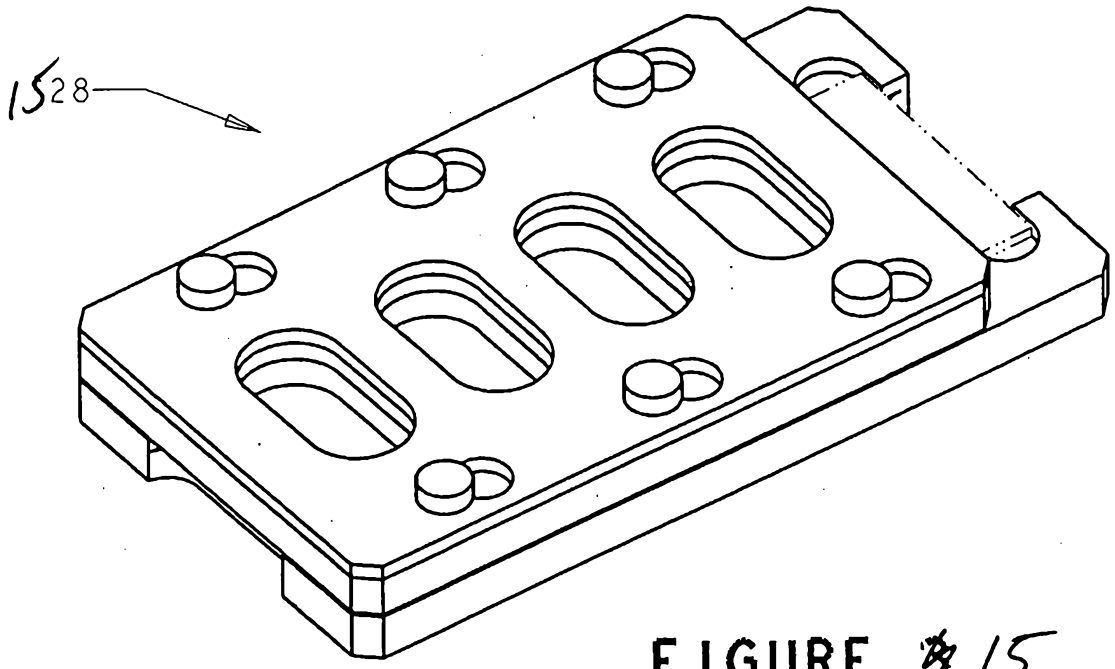

FIGURE 15

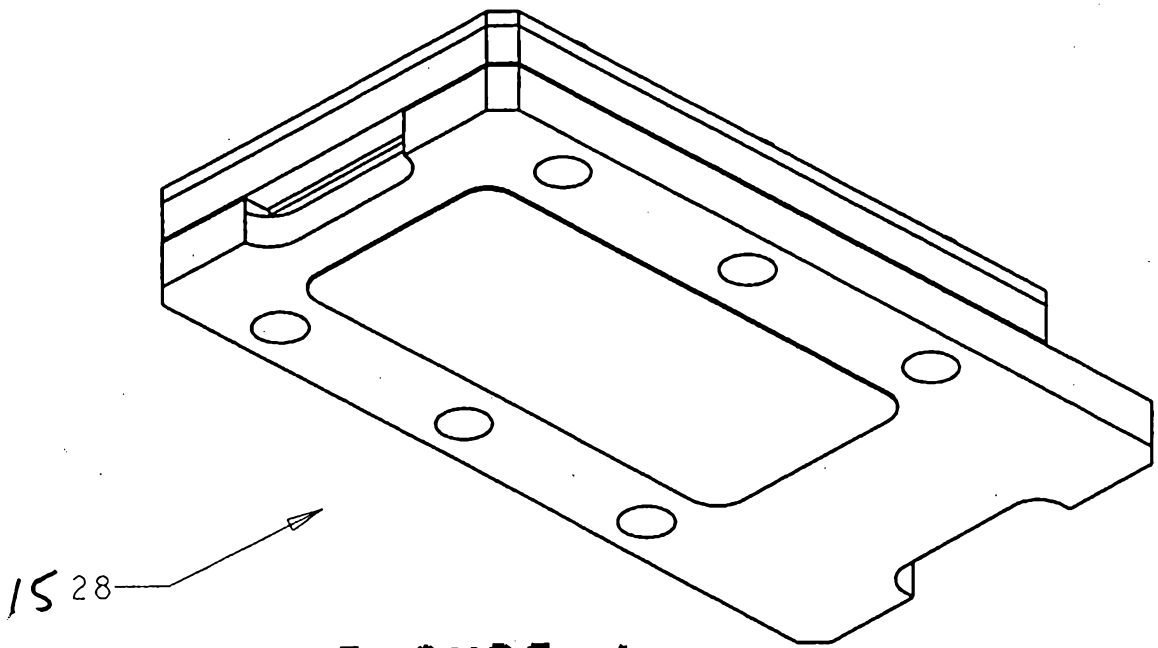

FIGURE 15

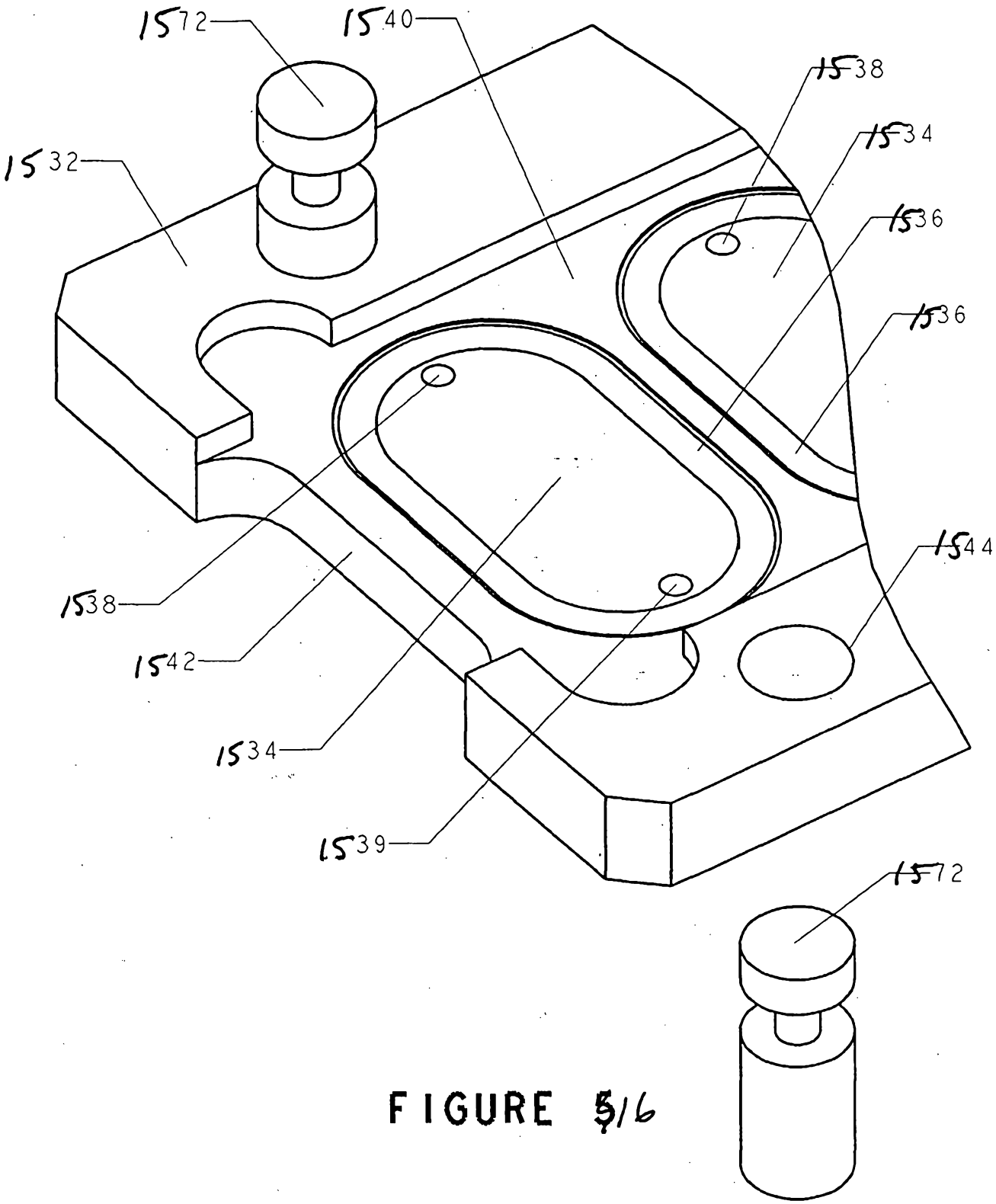
1572
1540
1538
1534
1536
1536
1532
1544
1538
1542
1534
1539
1572

FIGURE 5/6

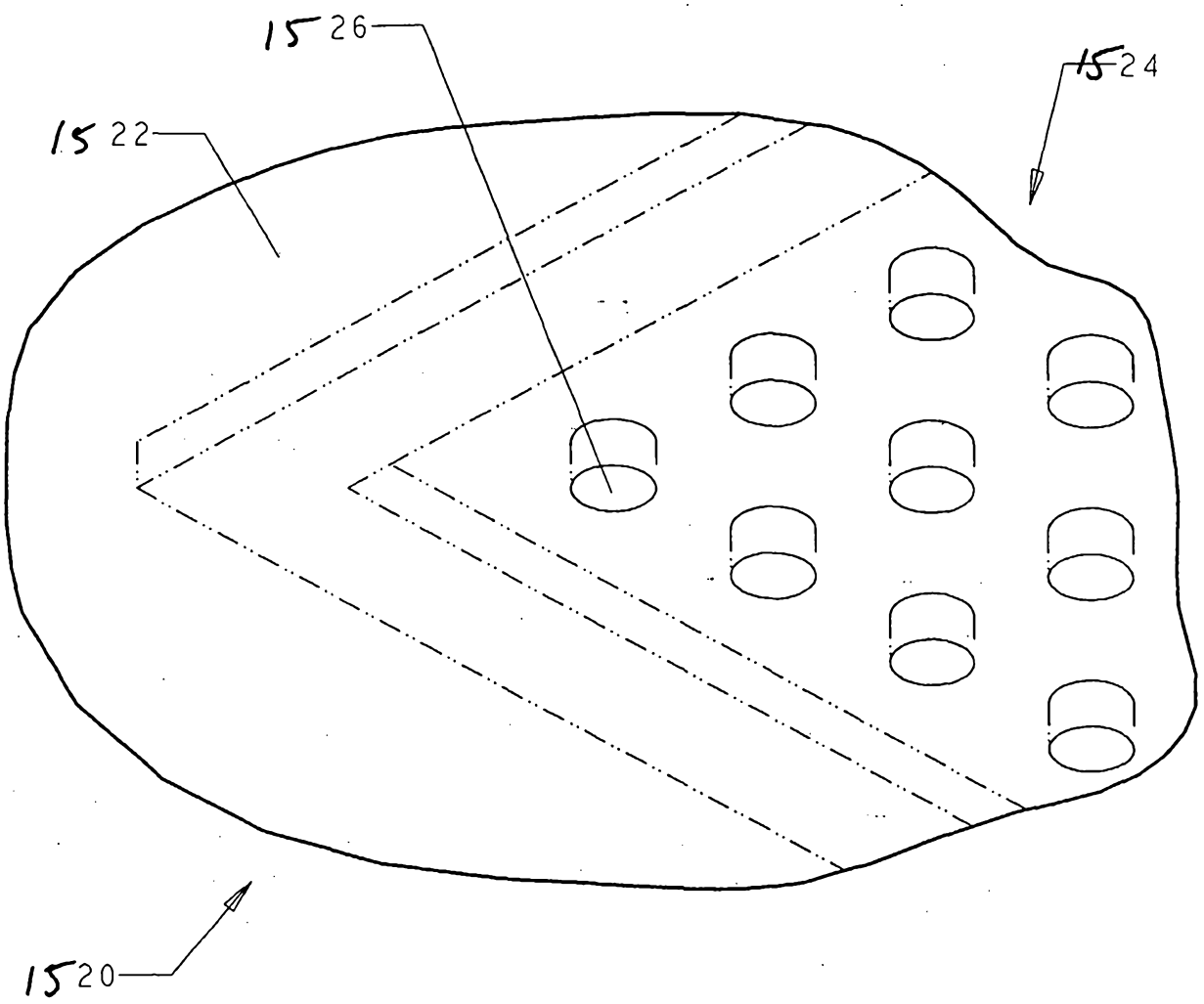

FIGURE 17

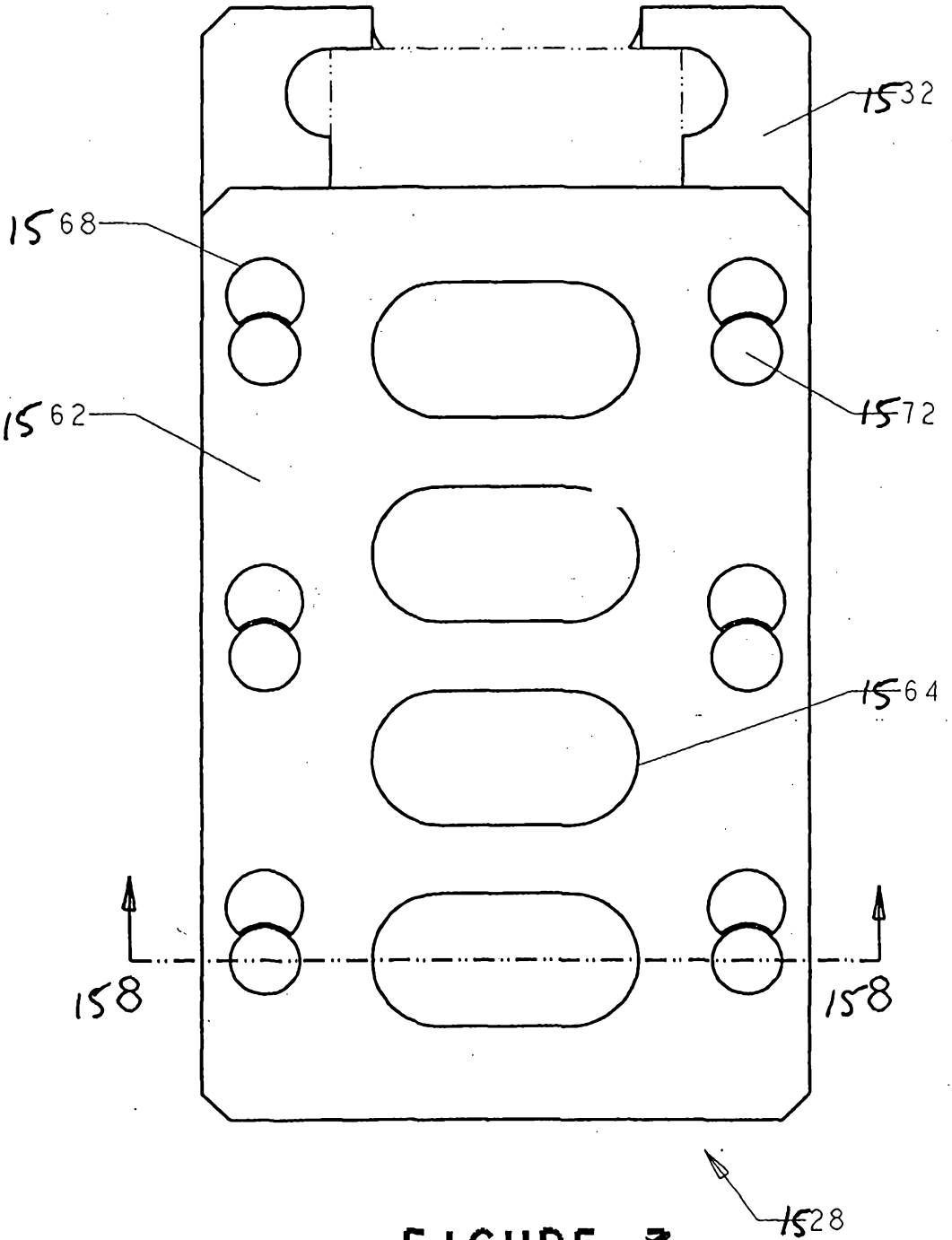

FIGURE 18

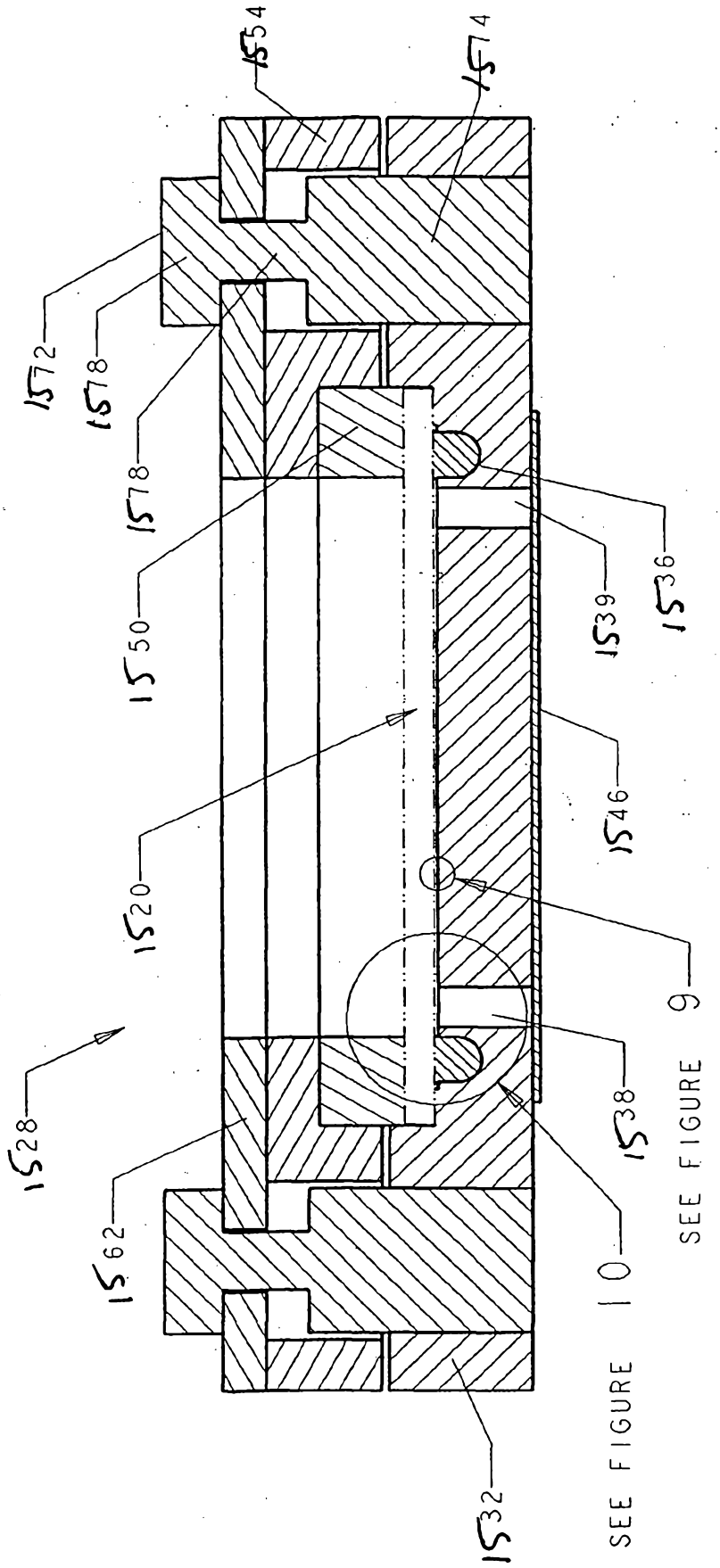
1554
1574
1572
1578
1578
1550
1539
1536
1546
1520
9
1538
1528
1562
10
1532
SEE FIGURE 10
SEE FIGURE 9

FIGURE 8 & 9

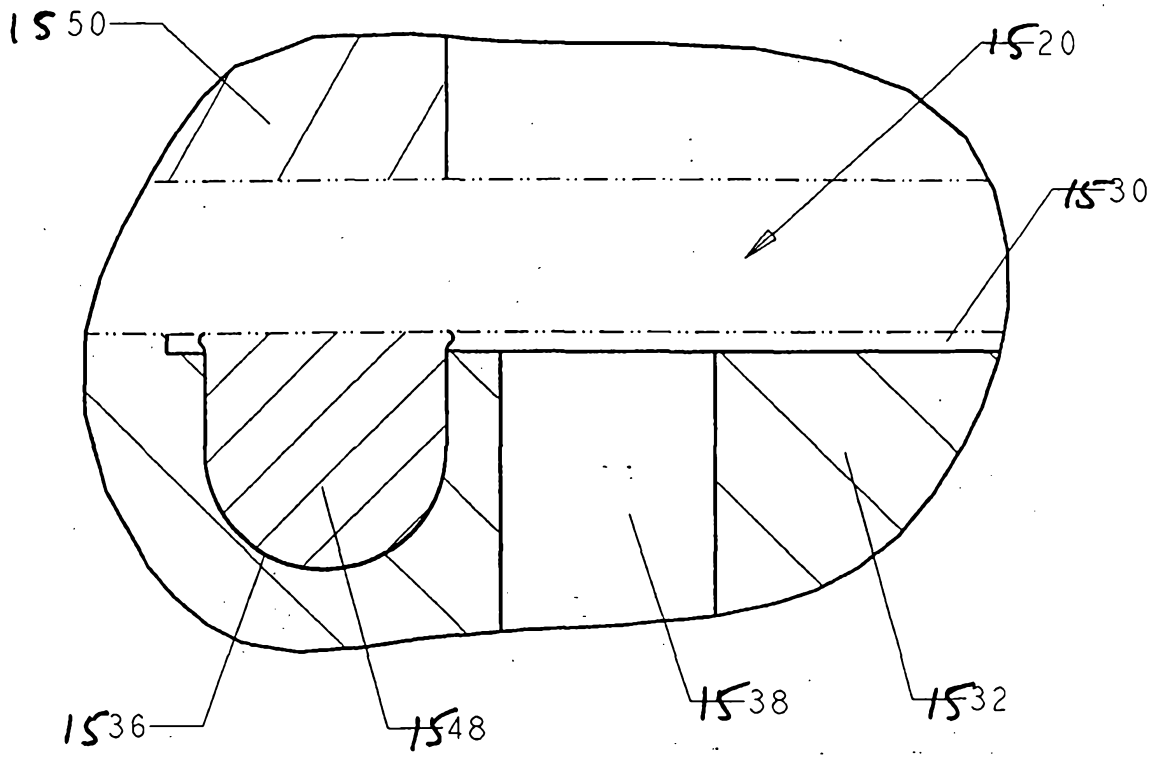

FIGURE 21

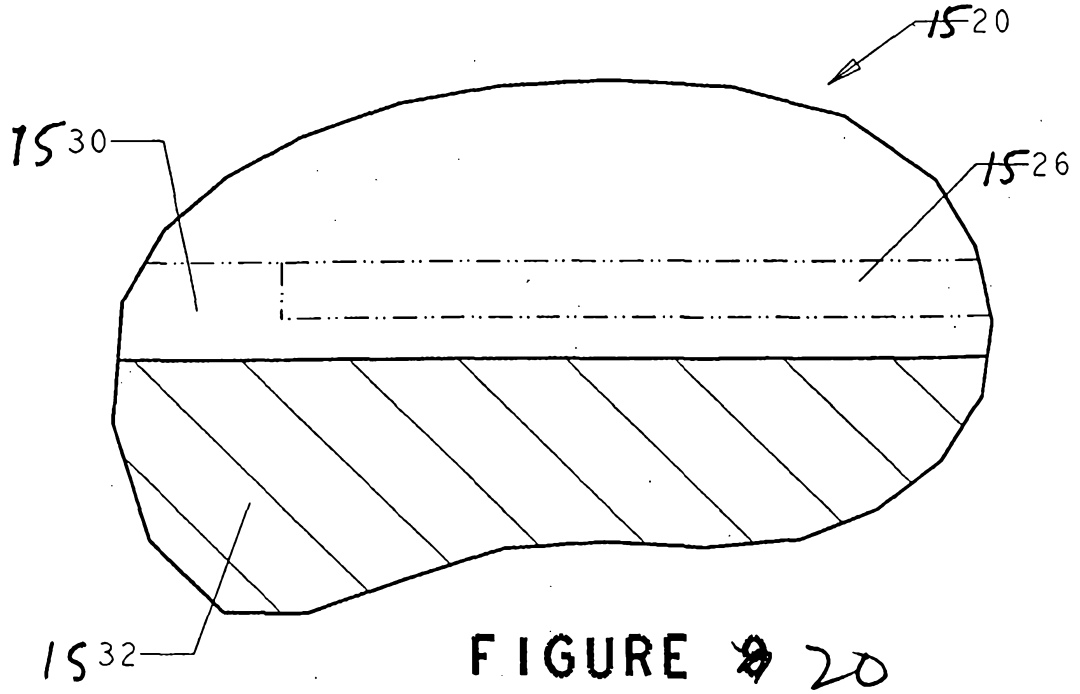

FIGURE 20

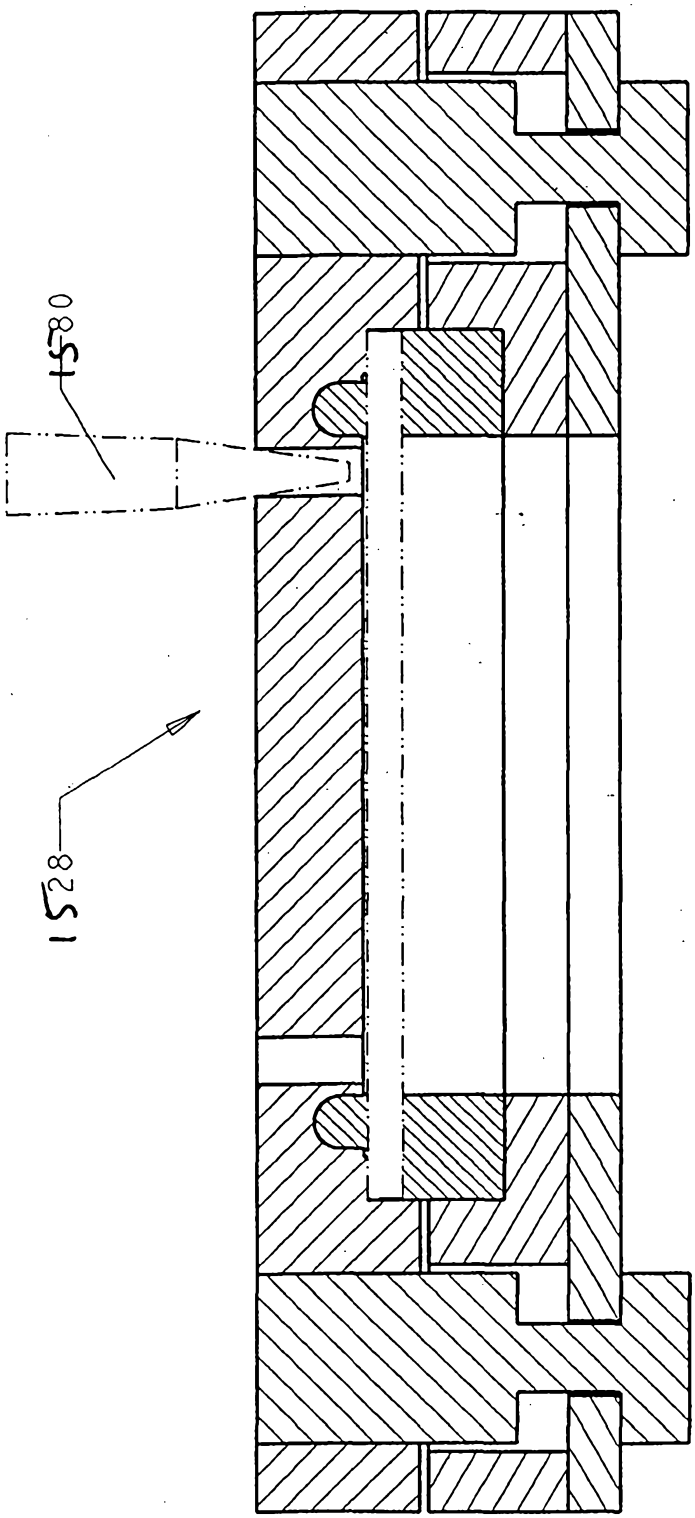

FIGURE 22

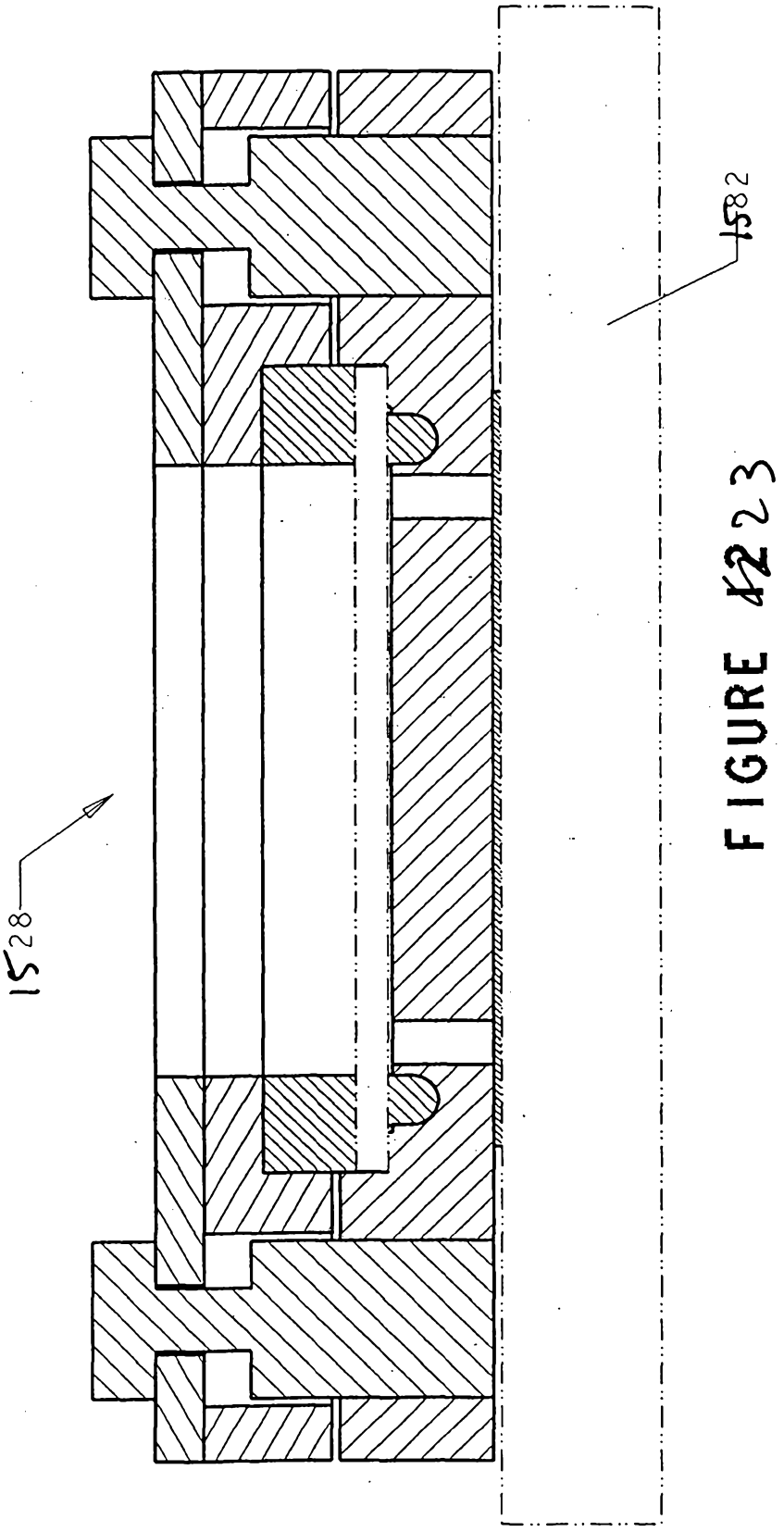

FIGURE 1223

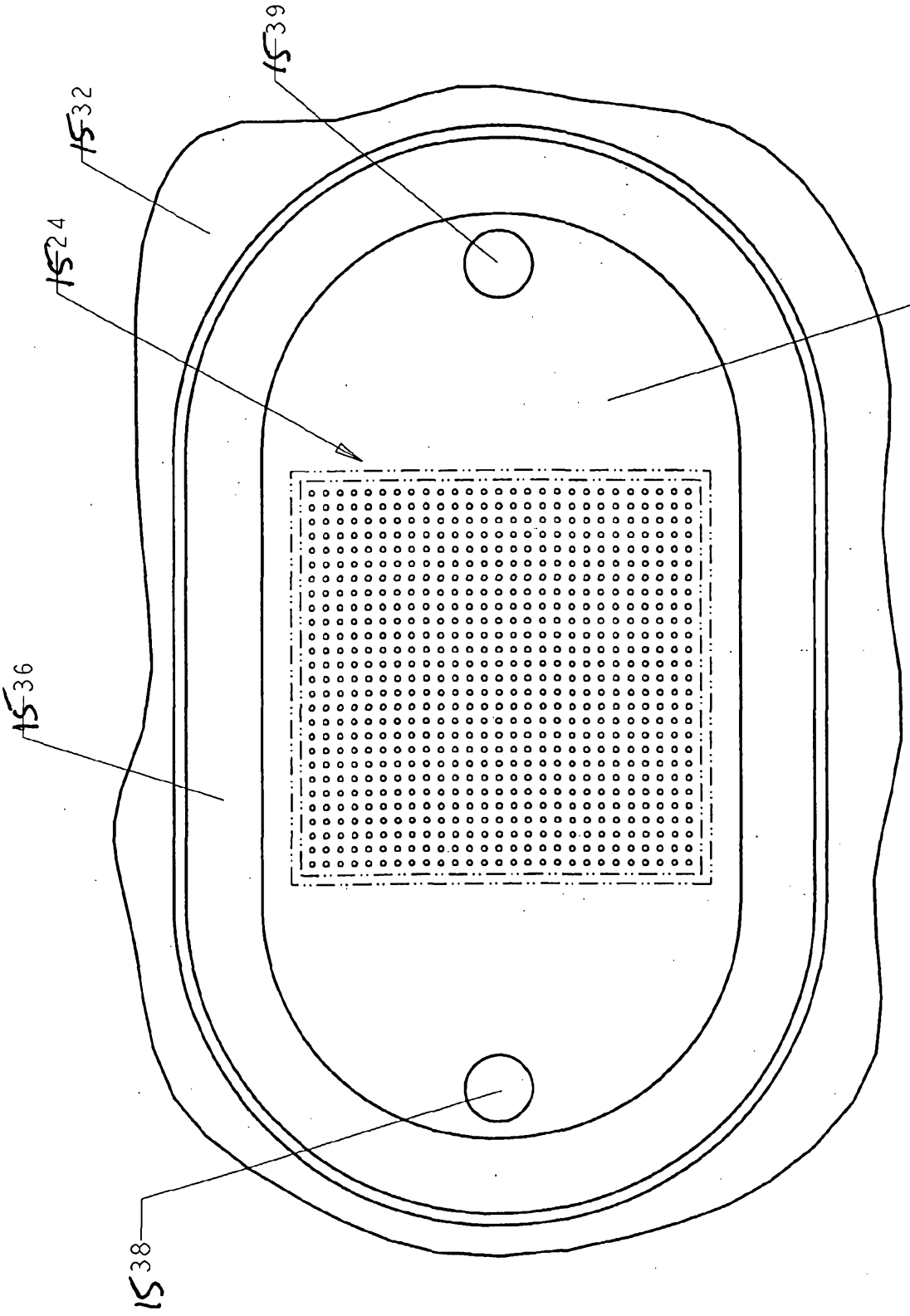

FIGURE 13 24

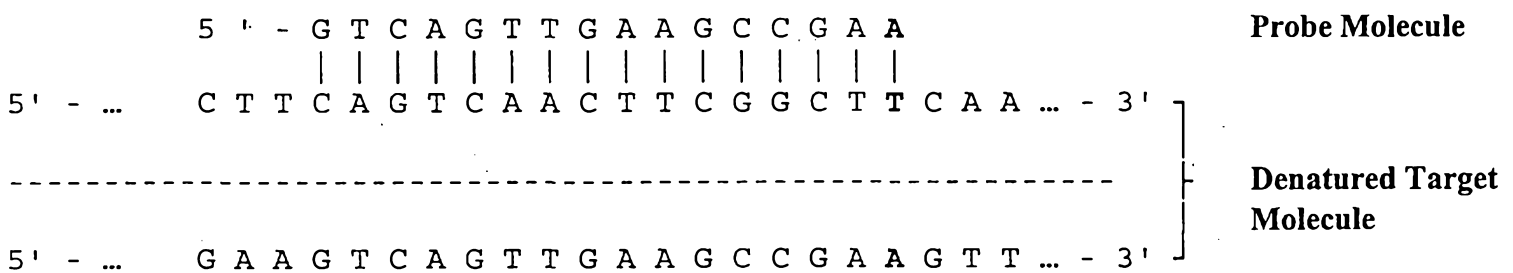

FIGURE ~~1A~~ 25A

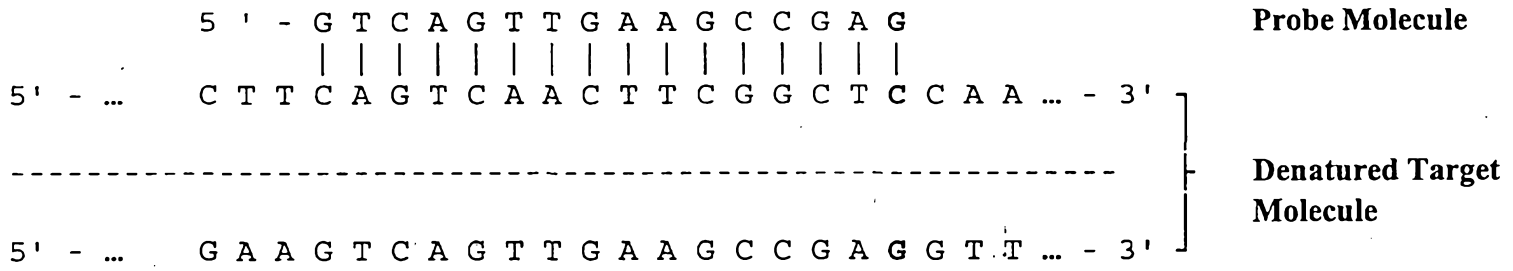

FIGURE ~~1B~~ 25B

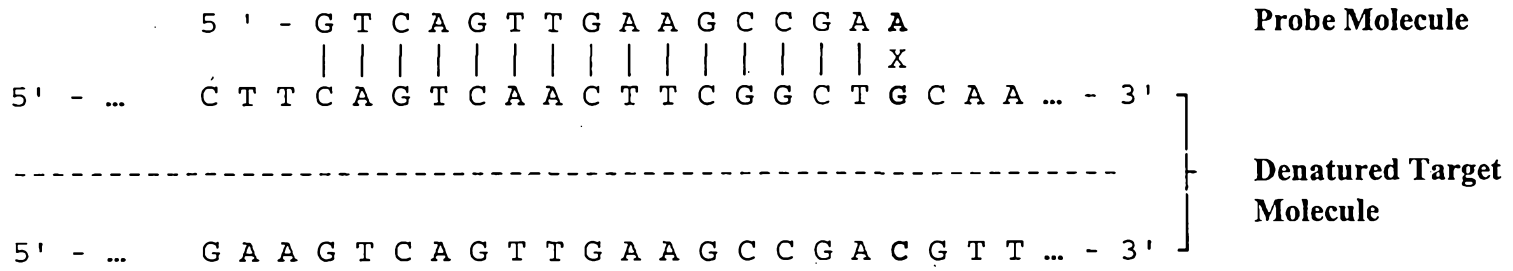

FIGURE ~~1C~~ 25C

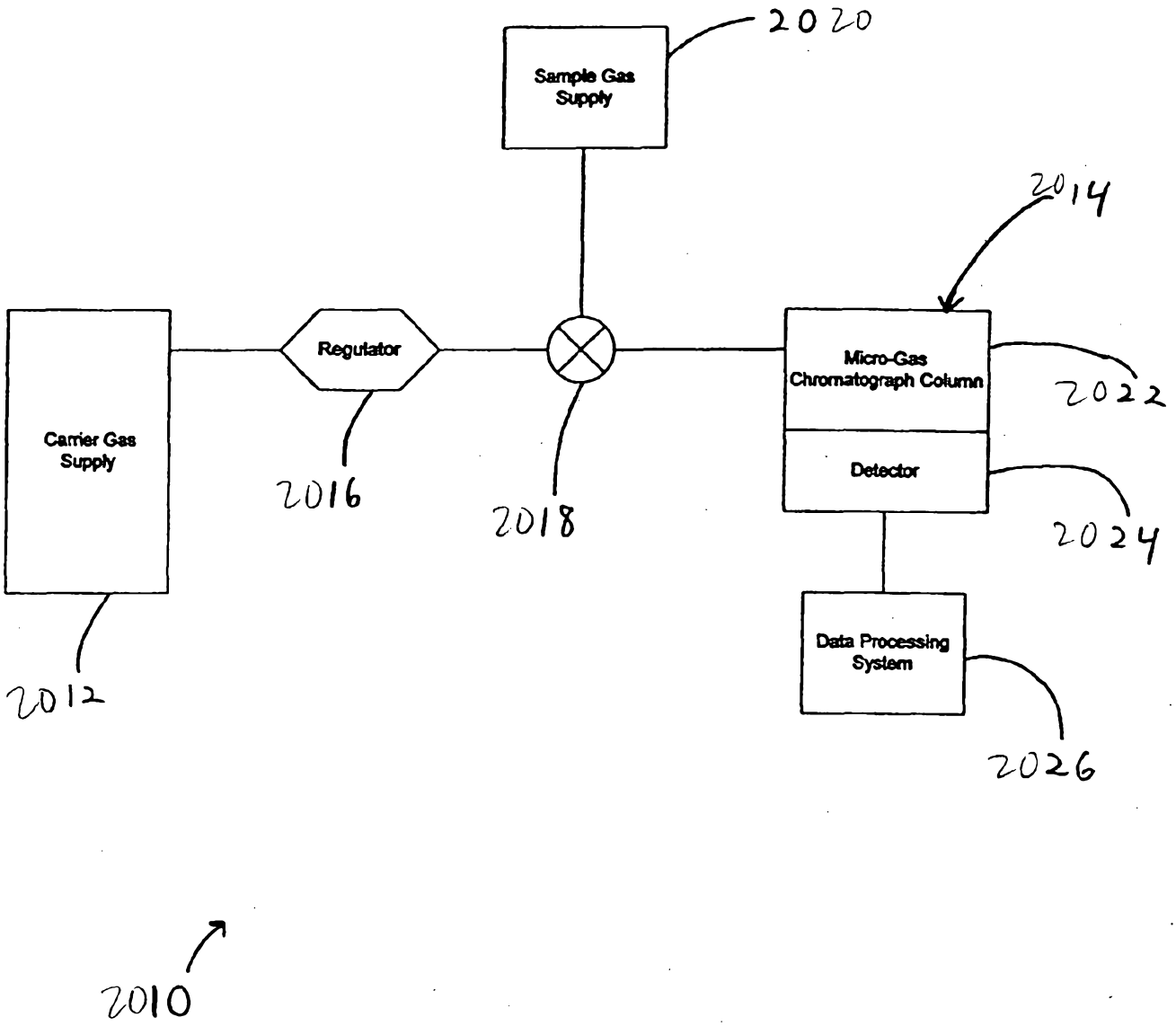
2020
Sample Gas Supply
2014
Carrier Gas Supply
Regulator
Micro-Gas Chromatograph Column
2022
Detector
2024
2016
2018
2012
Data Processing System
2026
2010

Fig. 26

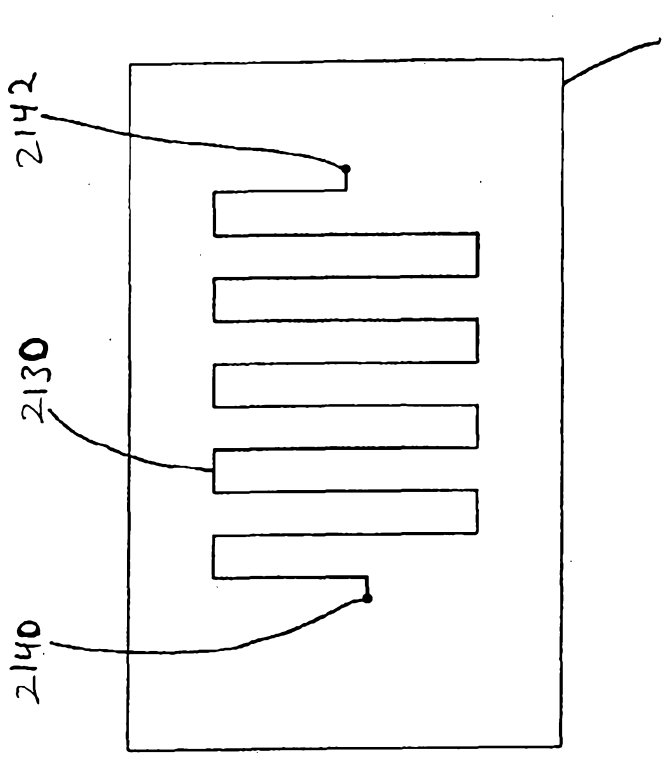

27/29

Fig. 29

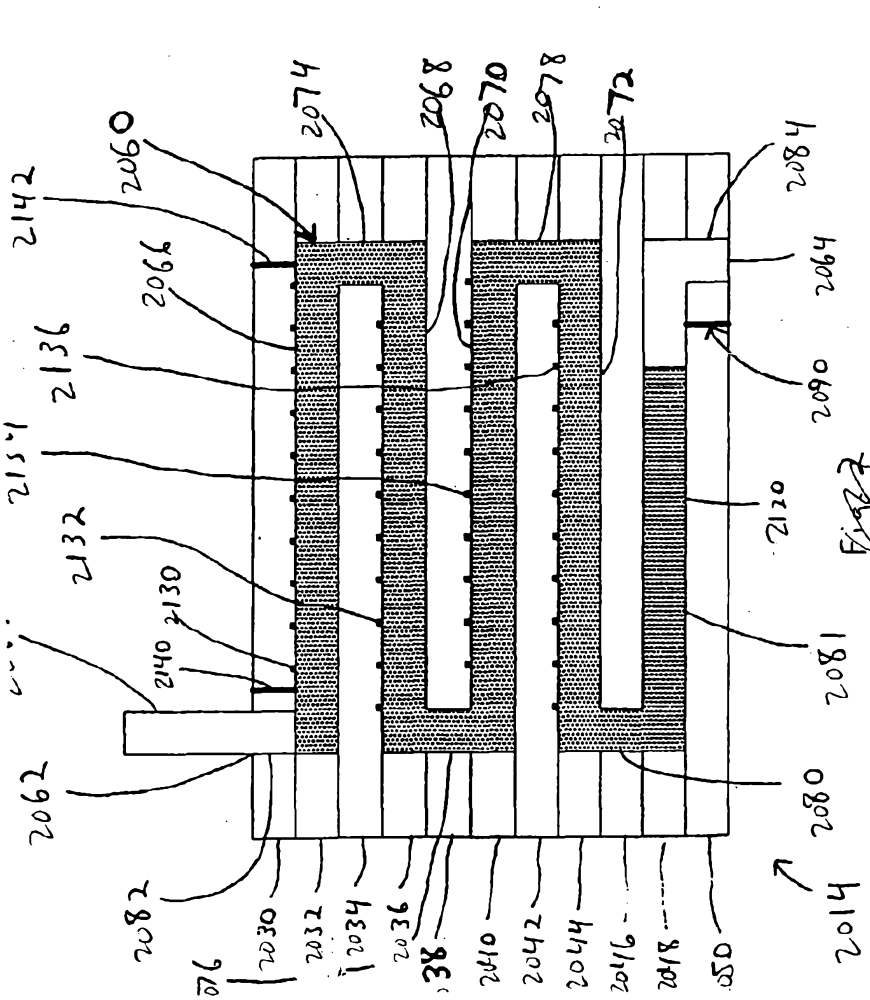

Figure 27

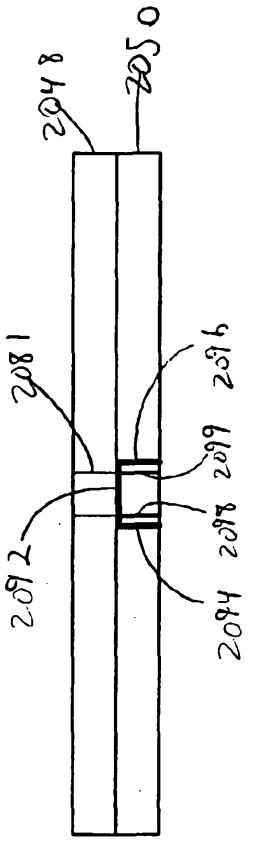

Fig. 28

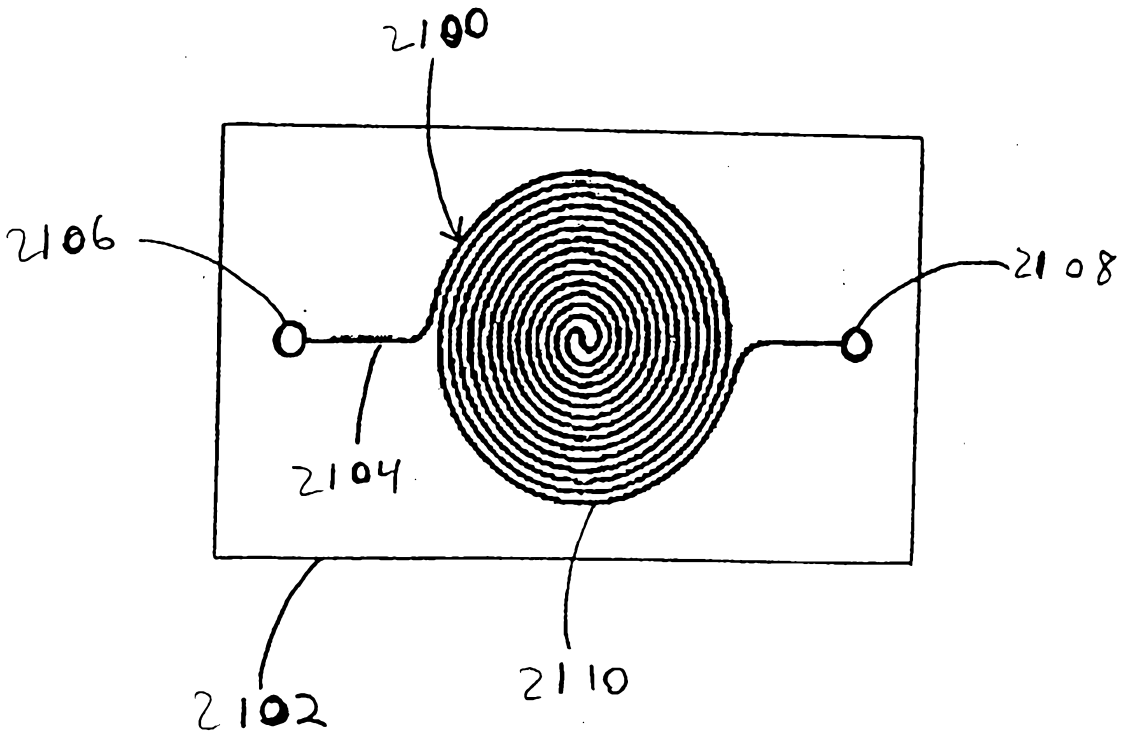

Fig. 3 ~~XXD~~

Fig 31

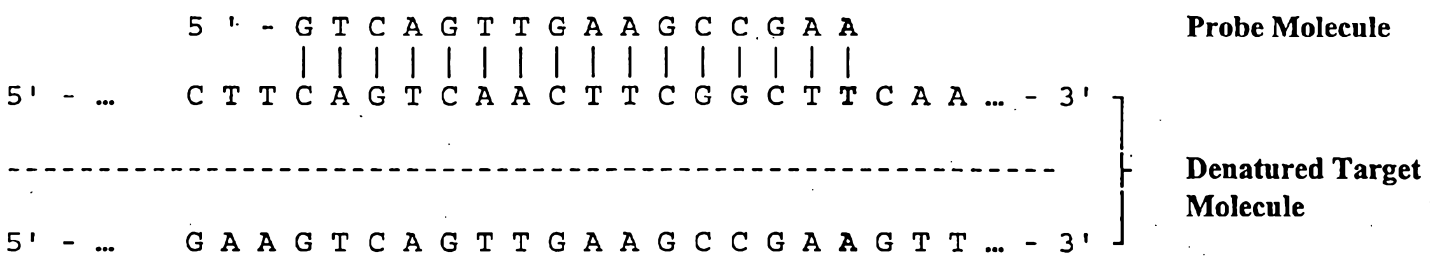

FIGURE 14A

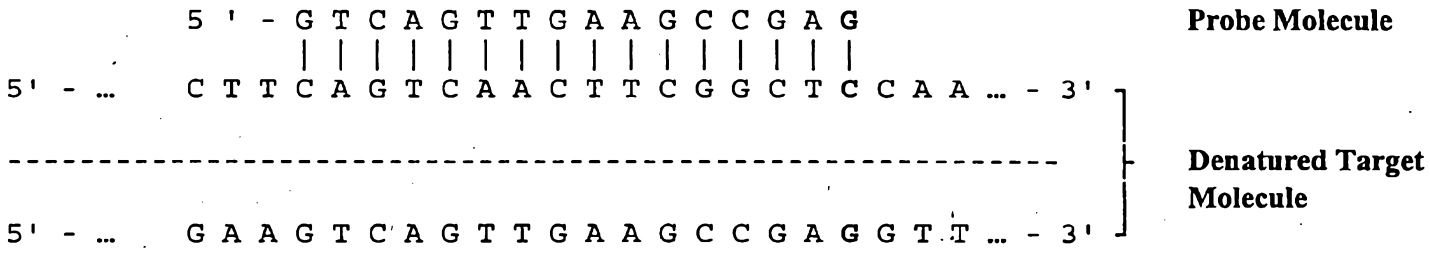

FIGURE 14B

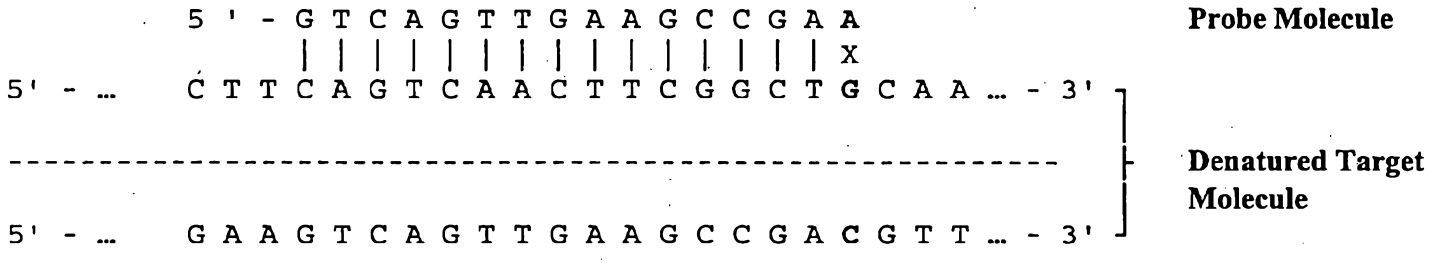

FIGURE 14C