April 4, 1967 J. F. WITHERSPOON ET AL 3,312,017

TUBE ACCESS DOOR

Original Filed May 28, 1962 5 Sheets-Sheet 1

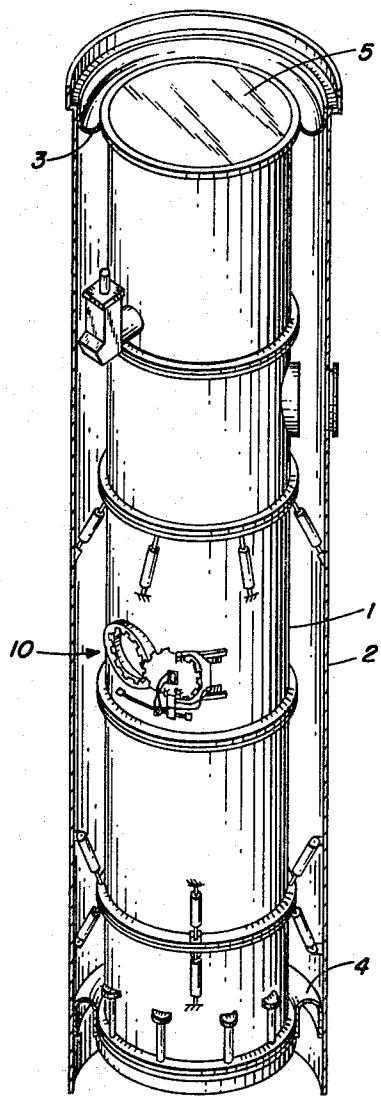

FIG. 1

INVENTORS
JOHN F. WITHERSPOON
WALLACE L. WARDELL

BY

Claude Funkhouser
ATTORNEY

April 4, 1967 J. F. WITHERSPOON ET AL 3,312,017

TUBE ACCESS DOOR

Original Filed May 28, 1962 5 Sheets-Sheet 2

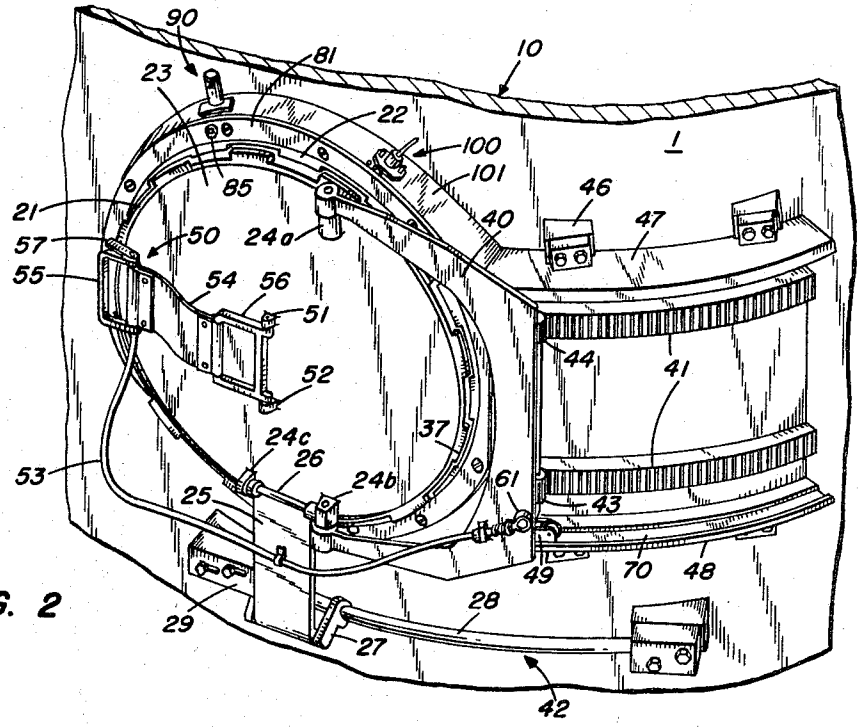

FIG. 2

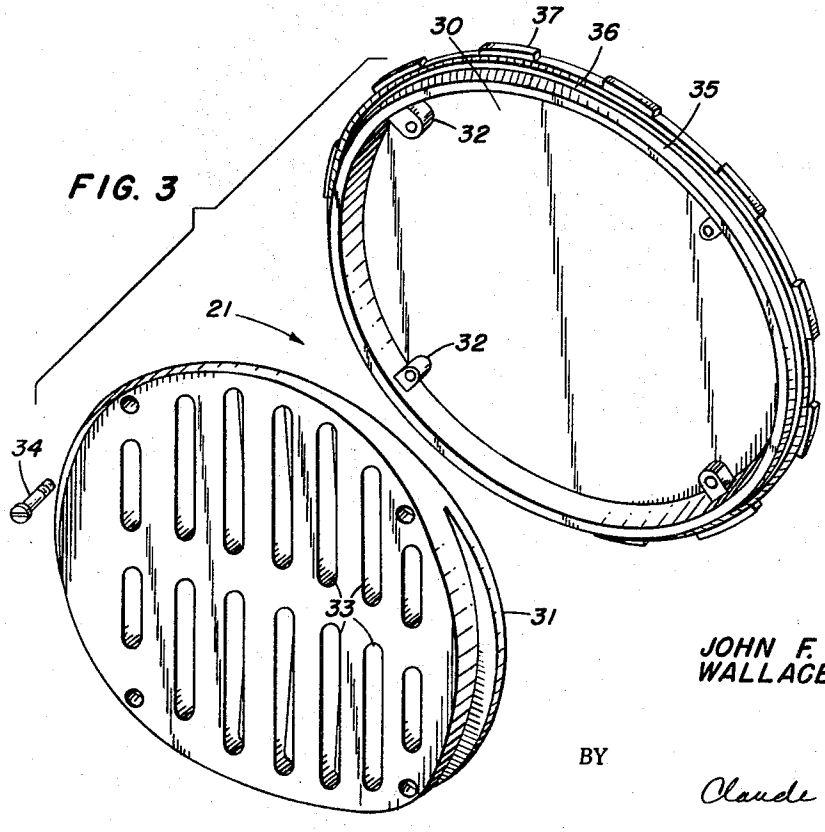

FIG. 3

INVENTORS
JOHN F. WITHERSPOON
WALLACE L. WARDELL

BY

Claude Funkhouser
ATTORNEY

April 4, 1967 J. F. WITHERSPOON ETAL 3,312,017

TUBE ACCESS DOOR

Original Filed May 28, 1962 5 Sheets-Sheet 3

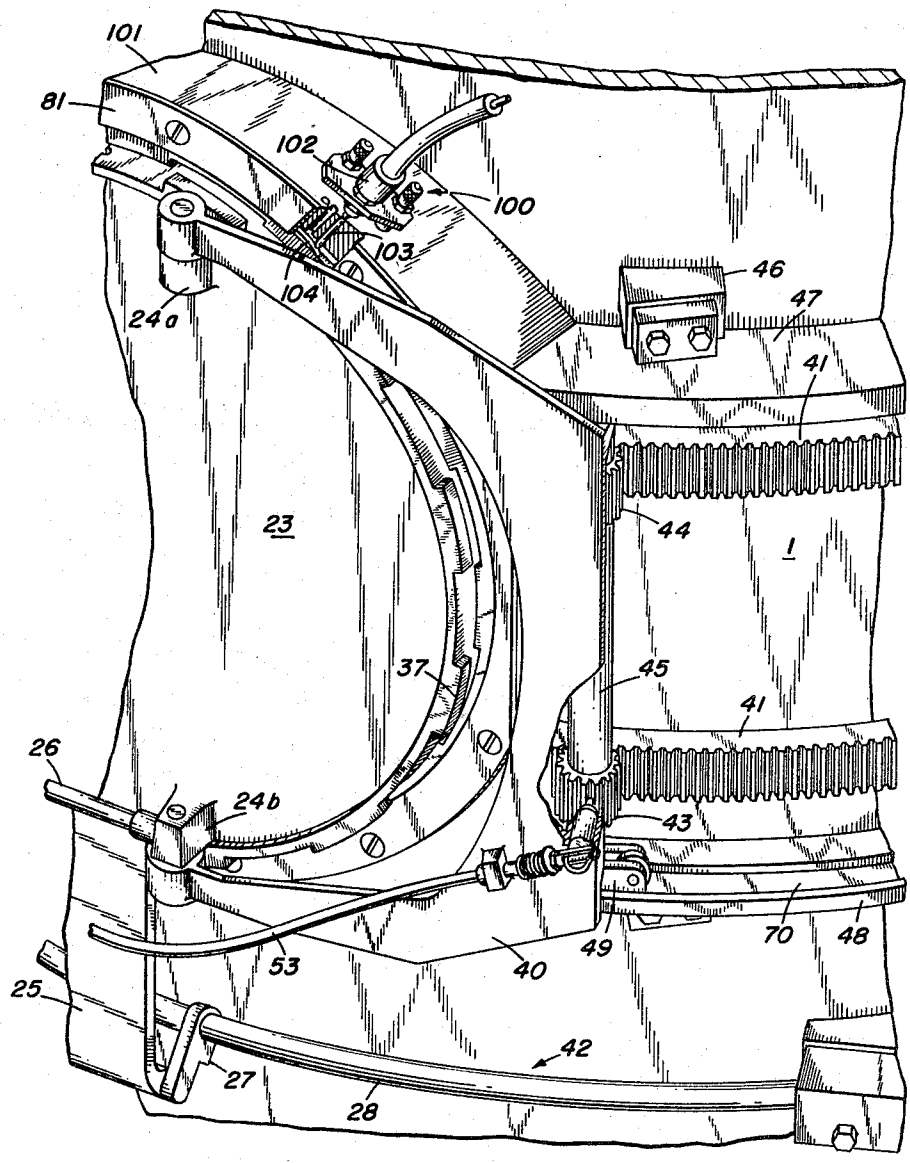

FIG. 4

INVENTORS
JOHN F. WITHERSPOON
WALLACE L. WARDELL

BY

Claude Funkhouser
ATTORNEY

April 4, 1967 J. F. WITHERSPOON ETAL 3,312,017

TUBE ACCESS DOOR

Original Filed May 28, 1962 5 Sheets-Sheet 4

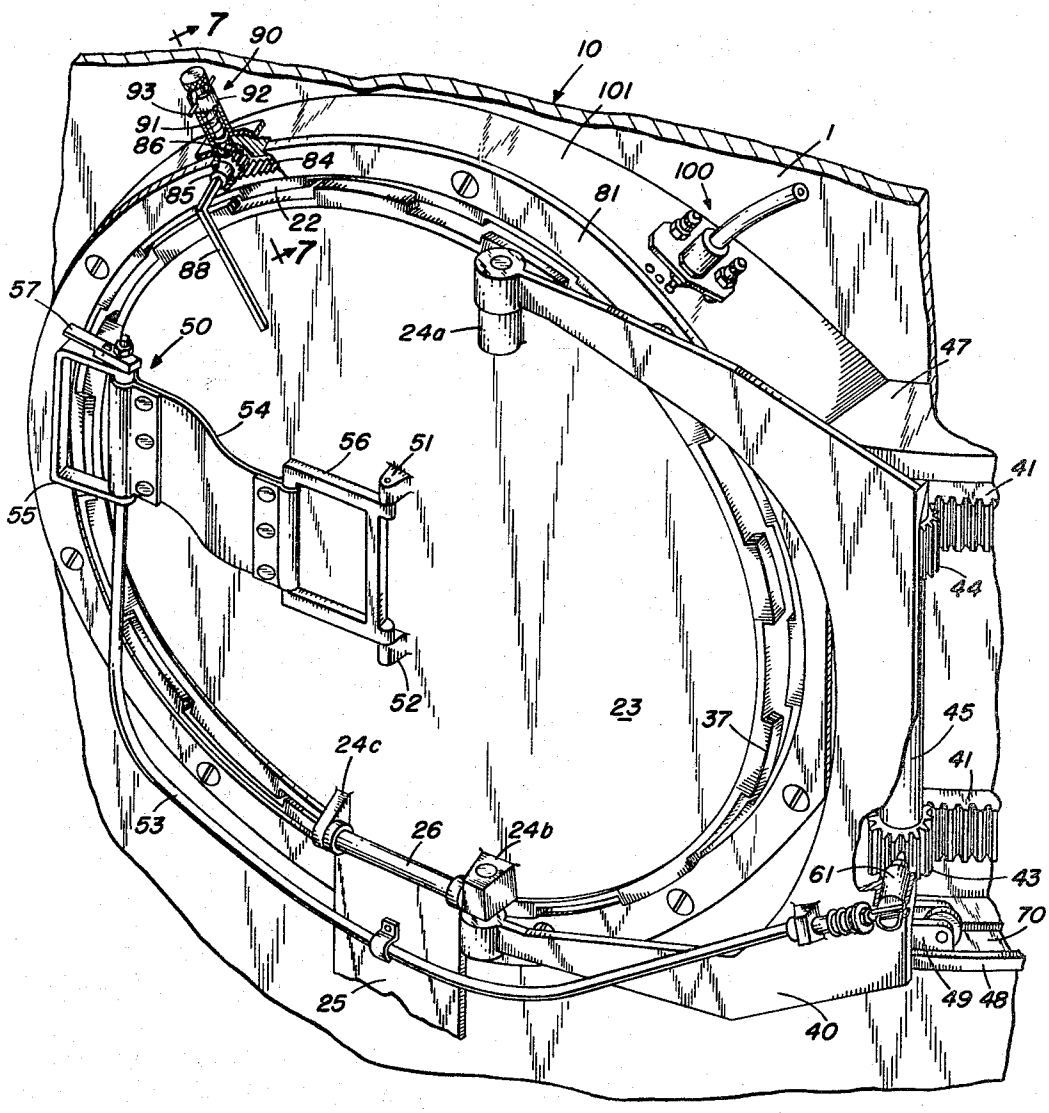

FIG. 5

INVENTORS
JOHN F. WITHERSPOON
WALLACE L. WARDELL

BY

Claude Funkhouser
ATTORNEY

April 4, 1967 J. F. WITHERSPOON ETAL 3,312,017

TUBE ACCESS DOOR

Original Filed May 28, 1962 5 Sheets-Sheet 5

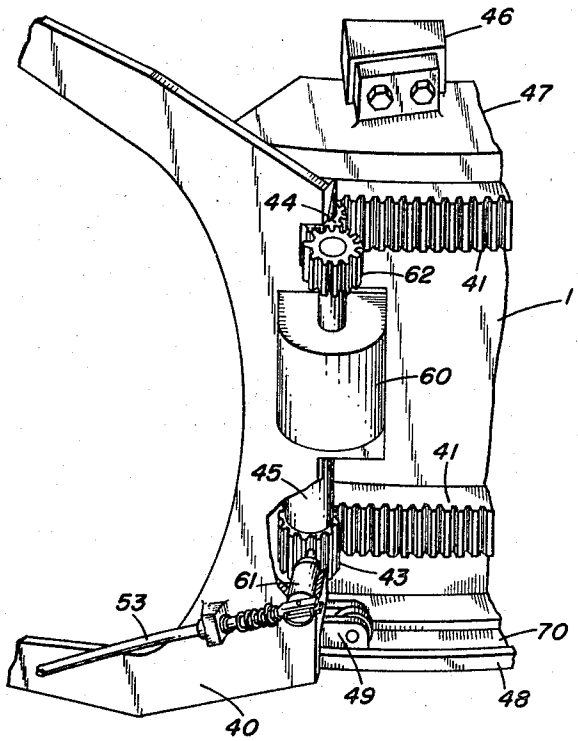

FIG. 6

FIG. 7

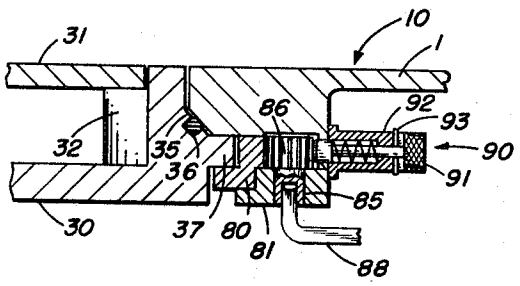

INVENTORS
JOHN F. WITHERSPOON
WALLACE L. WARDELL

BY

Claude Funkhouser
ATTORNEY

United States Patent Office

3,312,017

Patented Apr. 4, 1967

3,312,017

TUBE ACCESS DOOR

John F. Witherspoon, Mountain View, and Wallace L. Wardell, Campbell, Calif., assignors, by mesne assignments, to the United States of America as represented by the Secretary of the Navy

Substituted for abandoned application Ser. No. 199,228, May 28, 1962. This application Mar. 15, 1965, Ser. No. 446,768

13 Claims. (Cl. 49—246)

The present invention relates to an access door assembly for a submarine launching tube and more particularly to an access door which will seal the tube under substantial launching pressures, open on a circumference in a small swing-space and retract for the opening to allow access into the tube.

In the past, launching tubes for submarines have ordinarily assumed the form of an elongated cylinder with a port for the insertion of the projectile at one end. A pressurized door was provided on that end to withstand the pressurized launching atmosphere and also to prevent leakage of the sea water once the launching tube was opened for firing. But in a nuclear powered, missile carrying submarine the missiles are stored in an upright position so as to be launched vertically rather than horizontally. Launching may take place from deep within the ocean and would necessarily involve substantial pressurization of the launching tube so as to propel the missile upward with enough momentum so that it may be propelled well above the surface of the ocean into the air to allow for ignition of the rocket motors.

The mammoth size and weight of a missile, such as the Polaris missile, carried by such submarines necessitates that the launching pressures be substantial and hence the launching tubes and their closures must withstand these high pressures. This places a great burden upon the sealing function of the access doors cut into the launching tubes. The access-apertures are typically provided for final adjustment and inspection check-out of the Polaris missile. These access doors are necessarily cut into both launching tubes, that is the inner tube and the outer tube. Space being at a premium in these nuclear powered missile carrying subs, one can ill-afford to separate these inner and outer tubes by more than a few inches, certainly not just for the purpose of swinging a door open if the door can otherwise be dislocated from the aperture. Consequently, a door on the inner launching tube of such a submarine must swing away a minimum number of inches and yet be retractable so as to provide a wholly accessible aperture. Hence, a need exists for a door which is high-pressure resistant, retractable and yet able to swing away a minimum distance from the launching tube wall so as to be insertable compressively in a well in the tube wall to seal the same. It is further desirable that such a door should allow for complete control by the operator while being opened and for positive braking or locking at any point in the opening motion. Moreover, time being of the essence in a missile firing operation, it is vital that this door be quickly and accurately manipulated despite its massive size and weight.

With the foregoing in mind it is an object of the present invention to provide a missile launching tube access door which is of sufficient mass to resist pressures during launching and yet be readily operable to a retracted position.

Another object is to provide an access door for a missile launching tube that is able to swing away on a circumference in a minimum swing space.

Still another object is to provide a lock arrangement for an access door which is operable to seal the door in the access opening against substantial internal pressures.

A further object is to provide a retractor mechanism for supporting an access door along the side of the launching tube and operable to completely remove the door from the access opening.

Still another object is the provision of an access door with manual operating means and sensitive manipulatibility despite its size and weight.

Another object of the invention is to provide an access door whose support is self-moving so that a minimum of physical strength is needed to open and retract it.

Another object of this invention is to provide a retractor mechanism for an access door having braking and locking control.

A further object of this invention is to provide an access door which is positively controlled and accurately guided during retraction.

These and other objects and inherent advantages of the invention will become apparent from the following specification and drawings in which:

FIG. 1 is a side elevation of a missile launcher tube.

FIG. 2 is a side elevation of an access door unit.

FIG. 3 is an exploded view of an access door and insert assembly.

FIG. 4 is a front elevation view of an access door yoke and support track.

FIG. 5 is a front plan of an access door pull strap and retractor control.

FIG. 6 is a front elevational view of a door yoke and support track with retracting motor.

FIG. 7 is a cross-sectional view taken at 7—7 of FIG. 5 showing the locking ring and latching mechanism.

Referring now to the drawings where like reference numerals designate like parts throughout, FIG. 1 shows a front elevational view of a missile launcher tube assembly showing both the inner launching tube **1** and the outer tube **2** surrounding it. This inner tube **1** encloses the missile itself, holding it in launching orientation and when the tube is filled with a highly pressurized launching fluid, the cover **5** at the top of the launcher tube is removed and the missile is ejected violently up through the water and above, into the air, where its rocket motors are ignited. This inner launching tube is separated and sealed from the outer launching tube **2** by an upper inner tube seal **3** and lower inner tube seal **4**. A typical access door installation at **10** is shown on the inner tube. This access door coincides with a companion door on the outer tube. These apertures allow for servicing and adjusting the missile control components. This inner launching tube **1** and the access door **10** provided thereon must be strong enough to support the lateral sway of the ponderous missile as well as the pressurized atmosphere for ejection. Typically, missile skids bear against the sides of the tube as lateral supports and launch-guides.

In FIG. 2 there is shown an access door installation wherein the mounting, retracting and control means are shown in combination. The entire assembly **10** comprises the door itself **21** mounted sealably in an aperture **23** cut into the wall of the inner launching tube **1** and mounted on a supporting yoke means **40** which in turn moves to retract the door along circumferential support tracks **47** and **48** which tracks are mounted on the side wall of the inner launching tube. The door has a locking means **22** surrounding it and a handle or pull strap **50** in combination with a retractor control means. The door is guided along its swinging and retracting path by a guide rod assembly **42** also mounted upon the wall of the inner launching tube. This combination, as more specifically detailed and described below, provides an access door in the missile launching tube which is at once resistive of high launching pressures, is quickly and firmly securable, is sealable inwardly against the side of

the launching tube, is able to be retracted away from the aperture after being swung out away from the aperture which it seals, retracting along a guided path and operable quickly and precisely by manual means, despite its massive size and weight.

In FIG. 3 there is shown the door and insert assembly in an exploded view. The door and insert assembly **21** consists of a heavy metal drum-shaped door **30** into which there is mated a plastic insert **31**. This launching tube access door is preferably made of a strong structurally rigid metal such as a manganese bronze and cast with a dished head. Finished machining prepares this door to close evenly an access opening in the launcher tube. To conform the inner face of the door with the curvature of the launcher tube, insert **31** is installed on four bosses **32** cast inside the dished head. The insert is of any structurally rigid plastic, such as a molded phenolic plastic laminate, circular in shape with a conical surface in back and a curved surface in front conforming to the curvature of the launcher tube door and presenting a hard, smooth surface on the inside of the door within the tube bore. The inner surface of the insert has symmetrical slots **33** which are installed with the slots parallel to the vertical centerline of the door, placing an even number of slots above and below the horizontal centerline of the door. These slots **33** allow the eject pressure of a missile launching atmosphere to act against the door rather than against the insert **31**. The insert is bolted to the four bosses on the inside of the door with four self-locking cap screws, as at **34**. A 45° flange **35** shown also in FIG. 7, is machined at the outer edge of the door which serves as a mating face with the launching tube door-seating flange that surrounds the access opening. The 45° mating flange **35** of the door is grooved to receive an O ring as at **36**, to provide pressure-tight seal between the door and launcher tube when the door is locked closed. The periphery of the door is a flange machined to provide **12** equally spaced lugs **37**. Each lug follows the arc of the basic circumference of the door and is tapered to form a cam surface for engagement with dogs **22** spaced about the access opening. This operation will be discussed in detail hereinafter.

Referring back to FIG. 2 wherein is shown a series of three bosses, **24***a*, **24***b* and **24***c* wherein **24***a* and **24***b* are the upper and lower, respectively, hinge bosses cast in the face of the door to the right of the vertical center and whereby the door is hinged to the upper and lower arms of the yoke **40** by hinge pins at these points. Adjusting washers, ground to precise thickness, are inserted between the door hinges and the arms of the yoke to raise or to lower the horizontal centerline of the door so as to make it coincide with the horizontal centerline of the access opening. The lower hinge boss **24***b* is drilled through at 90° from the vertical hinge access and in line with a third boss **24***c* which is cast integral with the door. This boss **24***c* is drilled and a shaft **26** installed between the two supports **24***b* and **24***c*, which shaft acts as a hinge pin for an arm **25** of a linkage assembly for the guide rod **28**. The linkage assembly consists of the arm **25** and the link **27** that connects the door with a guide rod **28** installed on the launcher tube. An adjustable stop **29** is mounted on the launcher tube boss at the left end of the guide rod **28** and is connected with the rod by means of a dowel. Elongated holes in the stop admit an adjustment of the stop. When the access door is closed and locked, the stop is adjusted to make contact with the link. It is secured in this position by bolting down, with self-locking cap screws. Thereafter, the stop positions the vertical centerline of the door directly in the vertical plane through the vertical centerline of the access opening when the door is moved on the yoke to the left end of the guide rod. The adjustment made to the hinges at installation center the door exactly over the access opening in the launcher tube and allow it to swing on the yoke out of, or into, the access opening on the yoke. Two additional bosses, **51** and **52**, are cast integral with the door on its exterior in the plane of the vertical centerline close to the dome of the dished head of the door **21**. These bosses are drilled to receive the connecting pins which connect the bail of the pull-strap **50** to the door. The door is pulled clear of the access on the yoke by means of pull-strap **50**.

In FIG. 4 there is shown the access door yoke and cooperating support track for retention means. When the access door is fully unlocked and disengaged from the side of the launcher tube, it then becomes fully supported solely by the yoke which rides on support tracks **47** and **48** via upper and lower carriage assemblies, the lower shown at **49**. Thus, the door and yoke may be retracted, for example, by pulling on strap **50**, so as to clear the launcher tube access opening. This yoke **40** is fabricated of any strong, structurally rigid metal as, for example, a manganese bronze casting, with lower and upper arms hinged to the access door at upper boss **24***a* and lower boss **24***b*. The frame of the yoke is hinged to a quill shaft **45** having pinioned end portions **43** and **44** which mesh with upper and lower gear tracks **41** of the support tracks **47** and **48**. These support tracks may be fabricated of any structurally rigid metal, especially of a manganese bronze casting, and are cast to match the exterior contour of the launcher tube on which it is mounted. The support track is bolted to support bosses **46** which are part of the launcher tube section weldments. Each support track is provided with a recessed trackway, shown at **70** on support track **48**, to receive each of the carriage assemblies for circumferential movement of the access door. The above combination provides a firm, rigid support for the massive access door to independently support the door and swing it away from the closure once it has been unlocked and thereafter allow it to be withdrawn around the launcher tube circumference.

In FIG. 6 is shown the combination of yoke and retractor means wherein the retractor means is mechanized rather than portable as in FIG. 4. In this embodiment the retractor means is motorized and operated by controls on the pull-strap operated through the control-cable means **53** whereby a plunger **61** is adapted to lock the pinion **43** and provide for braking its movement along support tracks **47** and **48**. By means of this control the operator may either brake the movement of the door or lock it in a particular position. Similar controls are provided to operate the retractor motor **60** which drives a geared shaft **62** to move either or both of the pinions **43** on the gear shaft **45**. This mechanized retraction means is a quick sturdy means of retracting the heavy door and yet provide precise control at the pull-strap whereby the operator may control or brake the motor as seen above. It will be apparent that by means of this motorized retractor unit as well as the guide means that an operator can quickly, speedily move this heavy door away from the opening so as to clear it for last minute pre-firing adjustment on the missile. This is important then because time is critical. There are the further advantages, however, with this motorized track unit of quick starting, good positive traction, continuous control of the swing of the door obviating overswing and precise braking control at any particular point in the retracting movement.

In FIG. 5 there is shown the pull-strap and retractor control combination. The dual pull-strap and latching control assembly **50** is comprised of a handle **55** which the operator may grip to pull open the door being connected thereto by pull-strap **54** mounted on a hinged U-bar **56** which connects to the door itself by means of bosses **51** and **52** in a hinged fashion. Mounted on the handle **55** is a trigger **57** which operates, by a control cable **53**, the plunger **61** so as to brake the pinion **43** and prevent the yoke from moving on the track. The pull-strap and latching control provide the means for controlling the motion of the access door during the

operations of opening, closing and retraction. The pull-strap 54 is a flexible physical connection with the door for applying force by the operator. It consists of a conveyor-belting strap riveted to a U-shaped bar 56 attached to the door and riveted also to a handle 55 which supplies the hand grip for the operator. A trigger 57 attached to the handle operates a flexible control cable 53 at the end of which a spring loaded plunger 61 is adapted to engage the pinion 43 between any two teeth thereof. Pressing on the trigger disengages the plunger from the pinion and frees the quill shaft 45 so that it may rotate its pinion gears and move to the right or left in the support track in retracting fashion in answer to circumferential force supplied by the pull-strap on the door. Some braking and locking action can be effected in any position by the mere release by the operator of this trigger 57 arranged conveniently on his pull handle 55.

As best shown in FIG. 7 a clamping ring 80 having an inside diameter conforming to the access opening is held in place about the opening by a retaining ring 81, as shown in both FIGS. 5 and 7. The clamping ring 80 is of generally Z-shaped cross-section, as shown in FIG. 7, with the inner flange machined to provide twelve equally spaced dogs 22, shown in FIGS. 2 and 5, of the same size and shape as the lugs 37 provided about the edge of the door 30 while the outer flange of the clamping ring 80 has a spur gear segment 84, shown in FIG. 5, cut therein. The retaining ring 81 is bored to receive a sleeve 85 which journals the shaft of the pinion 86 to permit the latter to engage the spur gear segment 84 on the outer flange of the clamping ring 80. The end of the pinion shaft is recessed for engagement by a hand wrench 88 for manual turning of the pinion and resultant rotational movement of the clamping ring 80. When the door is moved to completely close the access aperture, the clamping ring 80 is positioned such that the spaced lugs 37 about the edge of the door pass between the spaced dogs 22 on the clamping ring and upon rotation of the latter the dogs 22 assume an overlying relationship with the lugs 37 mating along their respective tapered or cam surfaces to achieve a camming action which secures the door in watertight locked position against the access opening.

A latching mechanism 90, shown in FIGS. 5 and 7, is mounted on the retaining ring 81 and comprises a spring-loaded pin 91 having a wedge-shaped end which projects through a hole in the retaining ring to engage the pinion 86 between any two teeth and prevent turning of the latter. When the pin 91 is withdrawn against the compression of its loading spring and rotated 90 degrees in the housing 92, it is held in the withdrawn position by a through-pin 93 in the spring-loaded pin 91 as shown. The pinion 86 is then free to turn and rotate the clamping ring 80.

An interlock assembly 100, best shown in FIG. 4, mounted on the launcher tube embossment 101 includes an electrical switch 102 and rider 103. A cam slope 104 integrally formed on the clamping ring 80 engages the rider 103 to close the electrical switch when the clamping ring is rotated to the locked position. Closure of the switch may complete an electrical circuit including an indicator positioned at the launch control center to advise the operator that the access door is locked in place and ready for missile launch.

Although a motor-powered retractor mechanism has been shown in FIG. 6, it is found that complete manual operation is quite satisfactory under most circumstances.

While there is illustrated a preferred embodiment of the invention, it is to be understood that the invention may be embodied in other forms without departing from the spirit and scope of the invention as defined by the following claims.

What is claimed is:

1. A retractable door assembly for closing an aperture in the side of a tubular member comprising
a closure member conforming to said aperture;
a yoke having spaced arm members affixed to said closure member;
a shaft having a pinion affixed to each end thereof journaled to said yoke;
plunger means fixedly secured to said yoke and engaging said pinion to prevent rotation thereof;
a carriage mounted on said yoke;
a support track receiving and supporting said carriage, said track being mounted on the side of said tubular member adjacent said aperture having a circumferentially extending double spur gear track for mesh engagement with said pinion;
a circumferentially extending trackway for accommodation of said carriage;
said support track being able to sustain said closure member for movement into and out of said aperture and for circumferential retraction movement about said tubular member; and
guide means linked to said closure member for governing the movement of said closure member and releasing means for releasing said pinion to permit retraction of said closure member.

2. The retractable door assembly as claimed in claim 1 which further comprises
a second pinion mounted on the other end of said shaft;
a second carriage mounted on said yoke; and
a second support track mounted on the side of said tubular member adjacent said aperture and spaced from said first support track;
said second support tract having a circumferentially extending spur gear track for mesh engagement with said second pinion and a circumferentially extending trackway for accommodation of said second carriage.

3. The retractable door assembly as claimed in claim 1 which further comprises
a flexible pull-strap having one end pivotally attached to said closure member; and
a handle attached to the other end of said pull-strap such that the closure member may be manipulated into and out of said aperture.

4. The retractable door assembly as claimed in claim 3 wherein said releasing means comprises
a trigger mounted on said handle; and
a control cable coupling said trigger to said plunger means whereby operation of said trigger disengages said plunger means from said pinion.

5. A retractor mechanism for moving a closure member into and away from an aperture in an enclosure comprising
a yoke having spaced portions pivotally attached to said closure member;
first and second carriages mounted on said yoke;
first and second pinions rotatably mounted on said yoke;
first and second spaced members mounted on said enclosure adjacent said aperture for supporting said yoke, said spaced members each including a trackway to accommodate said carriages;
gear track segments for mesh engagement with said pinions; and
operable means coupled to at least one of said pinions to permit movement of said yoke along said trackway.

6. The retractor mechanism as claimed in claim 5 wherein said operable means further includes a motor to effect movement of said yoke.

7. A retractable door assembly for closing an aperture in an enclosure comprising
a closure member conforming to said aperture;

a yoke having spaced arm members affixed to said closure member; a support track mounted on said enclosure adjacent said aperture;

carriage means affixed to said yoke to accommodate movement of said closure member along said support track;

guide means linked to said closure member for governing the movement of said closure member along said support track; and

a plastic insert secured to said closure member, said insert member molded to conform to the interior surface of said enclosure when said closure member covers said aperture.

8. The retractable door assembly as claimed in claim **7** wherein the insert member is provided with a plurality of slots whereby forces on said closure member created by pressures within said enclosure do not act solely on said insert.

9. A retractable door assembly for closing an aperture in the side of a tubular member comprising

a closure member conforming to said aperture;

retractor means mounted on the side of said tubular member adjacent said aperture;

means securing said closure member to said retractor;

means for movement of said means into and out of said aperture and for circumferential retraction movement about said tubular member;

guide means linked to said closure member for governing the movement of said closure member;

said guide means comprising a guide rod mounted on said tubular member and extending circumferentially about said tubular member;

a link pivotally affixed at one end to said closure member;

said link formed at the other end to slidably and pivotally engage said guide rod; and

stop means mounted at one end of said guide rod whereby said closure member is precisely aligned for movement into and out of said aperture.

10. A retractable door assembly according to claim **9** wherein the stop means engaging the link of the guide means is adjustable.

11. A retractable door assembly for a tubular structure formed with an opening in its side wall and an arcuate track secured to the wall adjacent the opening comprising

a Y-shaped yoke mounted at its single end to ride on the track;

a door pivotally supported by the free ends of the yoke;

said door being adapted to close and seal the opening in the cylindrical wall of the tubular structure;

means attached to the wall of the tubular structure for aligning the door vertically with the opening;

means associated with the pivotal support of the door for aligning the door horizontally with the door opening; and

means attached to the door and engaging the track to lock the door in any position;

said means being manually operated to release the locking means and to open the door, the door in the opening operation following, first, an angular path about its pivot and later an arcuate path concentric with the tubular structure.

12. A missile launching system comprising

a launching tube;

a second tube concentric with the launching tube and extending the length of the launching tube and spaced therefrom;

an access opening located in the wall of the launching tube;

an access opening in the second tube and aligned with the opening of the launching tube;

a double track mounted on each of the walls of the inner and outer tubes adjacent the openings, said track extending in an arc concentric with the tubes;

a yoke carried by each of said tracks and adapted to move on said tracks along a path concentric with the tubes; and

a door pivotally supported by each of said yokes so that during the opening of either of the doors, the door being opened will travel first through an angular path about its pivotal support and then along an arcuate path concentric with the tubes.

13. In a missile launching system having

an inner launching tube and an outer tube;

said tubes being concentric and spaced from one another by a distance relatively small when compared to the diameter of the tubes;

said inner tube being formed with a door frame about an opening and a double track located on the side wall of the tube and adjacent the door frame;

the combination of the inner tube with a door adapted to fit and seal the opening of the door frame;

means mounted on the track and adapted to move in a path concentric with the inner tube;

said track mounted means hingedly supporting the door to provide a door opening movement in which the door first moves arcuately about its hinge means and then together with the track mounted means, moves in a path concentric with the wall of the inner tube.

References Cited by the Examiner

UNITED STATES PATENTS

150,906	5/1874	Stephenson	49—41 X
1,959,705	5/1934	Christianson	49—276
2,157,678	5/1939	Schielke	49—221 X
2,927,787	3/1960	Maher	49—276
3,087,386	4/1963	Rung et al.	89—1.81

HARRISON R. MOSELEY, *Primary Examiner.*

REINALDO P. MACHADO, *Examiner.*

J. K. BELL, *Assistant Examiner.*