PCT WORLD INTELLECTUAL PROPERTY ORGANIZATION
International Bureau

INTERNATIONAL APPLICATION PUBLISHED UNDER THE PATENT COOPERATION TREATY (PCT)

(51) International Patent Classification 5 : H05B 41/29, 41/36

A1

(11) International Publication Number: WO 94/04011

(43) International Publication Date: 17 February 1994 (17.02.94)

(21) International Application Number: PCT/GB93/01618

(22) International Filing Date: 30 July 1993 (30.07.93)

(30) Priority data:
9216425.0 1 August 1992 (01.08.92) GB

(71) Applicant: COOLITE LIMITED [GB/GB]; Canterbury Mills, 95-97 Canterbury Road, Croydon, Surrey CR0 3HH (GB).

(72) Inventor: HESKETH, John ; Excil Electronics, Excil House, Ripley Drive, Normanton, West Yorkshire WF6 1QT (GB).

(74) Agent: FRY HEATH & SPENCE; Mill House, Wandle Road, Beddington, Croydon, Surrey CR0 4SD (GB).

(81) Designated States: AT, AU, BB, BG, BR, CA, CH, CZ, DE, DK, ES, FI, GB, HU, JP, KP, KR, LK, LU, MG, MN, MW, NL, NO, NZ, PL, PT, RO, RU, SD, SE, SK, UA, VN, European patent (AT, BE, CH, DE, DK, ES, FR, GB, GR, IE, IT, LU, MC, NL, PT, SE), OAPI patent (BF, BJ, CF, CG, CI, CM, GA, GN, ML, MR, NE, SN, TD, TG).

Published
With international search report.
Before the expiration of the time limit for amending the claims and to be republished in the event of the receipt of amendments.

(54) Title: FLUORESCENT TUBE DRIVER AND LIGHTING SYSTEM

(57) Abstract

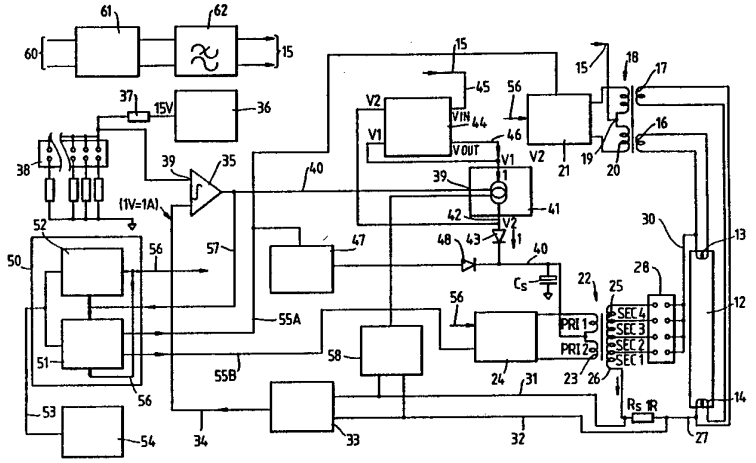

The invention is concerned with a fluorescent tube driver arranged to be supplied by a direct voltage source (particularly a voltage source less than 50 volts, preferably 24 volts nominal) and having a tube drive output in the range 10 to 100 watts of arc power (preferably 10 to 40 watts) with a frequency of oscillation in the range 15 to 50 KHz (preferably 32 KHz nominal), the driver comprising an arc waveform transformer (22), the primary winding (23) of which is supplied with a variable drive current derived from the low voltage source (15), and the secondary winding (25) of which is adapted to be connected to the electrodes (13, 14) of a fluorescent tube (12), such that in use an alternating tube arc current will flow through the secondary winding and tube. The drive includes a closed loop control system (31-44) provided for maintaining substantially constant the tube arc current by varying the amplitude of the arc current waveform without varying the pulse width. This extends the tube life and reduces the wasted heat. The arc transformer driver (24) and arc current are selected to give a symmetrical arc waveform with a constant waveform duty cycle in the range 90 to 95 %, and a tube arc power less than 90 % of the rated tube power, and to maintain at a constant value in the range 1.3 to 1.5 the arc crest factor.

FOR THE PURPOSES OF INFORMATION ONLY

Codes used to identify States party to the PCT on the front pages of pamphlets publishing international applications under the PCT.

AT	Austria	**FR**	France	**MR**	Mauritania
AU	Australia	**GA**	Gabon	**MW**	Malawi
BB	Barbados	**GB**	United Kingdom	**NE**	Niger
BE	Belgium	**GN**	Guinea	**NL**	Netherlands
BF	Burkina Faso	**GR**	Greece	**NO**	Norway
BG	Bulgaria	**HU**	Hungary	**NZ**	New Zealand
BJ	Benin	**IE**	Ireland	**PL**	Poland
BR	Brazil	**IT**	Italy	**PT**	Portugal
BY	Belarus	**JP**	Japan	**RO**	Romania
CA	Canada	**KP**	Democratic People's Republic of Korea	**RU**	Russian Federation
CF	Central African Republic			**SD**	Sudan
CG	Congo	**KR**	Republic of Korea	**SE**	Sweden
CH	Switzerland	**KZ**	Kazakhstan	**SI**	Slovenia
CI	Côte d'Ivoire	**LI**	Liechtenstein	**SK**	Slovak Republic
CM	Cameroon	**LK**	Sri Lanka	**SN**	Senegal
CN	China	**LU**	Luxembourg	**TD**	Chad
CS	Czechoslovakia	**LV**	Latvia	**TG**	Togo
CZ	Czech Republic	**MC**	Monaco	**UA**	Ukraine
DE	Germany	**MG**	Madagascar	**US**	United States of America
DK	Denmark	**ML**	Mali	**UZ**	Uzbekistan
ES	Spain	**MN**	Mongolia	**VN**	Viet Nam
FI	Finland				

FLUORESCENT TUBE DRIVER AND LIGHTING SYSTEM

BACKGROUND OF THE INVENTION

This invention relates to a fluorescent tube driver and a fluorescent lighting system including such a driver.

The invention is concerned with a driver working from a direct voltage supply, preferably but not essentially a low voltage supply (less than 50 volts) and including an oscillator circuit producing a relatively high frequency oscillation (15 to 50 KHz preferably 25 to 50 KHz) and including a transformer supplying arc current to the fluorescent tube. Known circuits operating from a direct voltage supply at a high frequency are described for example in UK Patent Specifications 1010208, 1308578, 2126810, 2246034, 2244608, 2212995 and 2095930. However these operate by controlling the current to the driver by varying the pulse width.

The present invention particularly aims to provide a driver capable of operating at high efficiency and which is particularly suited for use in heat conscious and energy saving environments. Additionally the invention aims to produce a driver which will promote optimum tube life.

Summary of the Invention

The invention is particularly concerned with a fluorescent tube driver arranged to be supplied by a direct voltage source (particularly a voltage source less than 50 volts, preferably 24 volts nominal) and having a tube driver output in the range 10 to 100 watts of arc power (preferably 10 to 40 watts) with a frequency of oscillation in the range 15 to 50 KHz (preferably 32 KHz nominal), the driver comprising an arc waveform transformer, the primary winding of which is supplied with a variable drive current derived from the low voltage source, and the secondary winding of which is adapted to be connected to the electrodes of a

fluorescent tube, such that in use an alternating tube arc current will flow through the secondary winding and tube. The driver of the present invention is of the above type and has a number of novel and advantageous features which may be claimed independently or in any combination. These are as follows:

A closed loop control system is provided for maintaining substantially constant the tube arc current by varying the amplitude of the arc current waveform. This preferably comprises means for measuring the arc current flowing through the secondary winding and tube to produce a measured signal representing actual arc current supply, means for generating a reference signal representing desired arc current, comparator means for comparing the measured signal and the reference signal and producing an error signal, and a current adjustment means responsive to the error signal for deriving the drive current such as to maintain the tube arc current constant.

A tube arc current constantly held at the right level extends the tube life. Insufficient arc current results in a lack of anode fall voltage across the electrodes resulting in insufficient electrode temperature, which in turn results in much reduced electrode life and hence reduced tube life due to inefficient operation of the electrodes. Excessive arc current results in electrode over dissipation and hence reduced electrode life.

The closed loop arc current control system utilises a true current servo system rather than a pulse width modulation system. This has the advantage that the arc wave form duty cycle is constant which in turn results in a constant arc current crest factor irrespective of the degree of correction introduced by the error amplifier. The net gain is that tube life variation due to varying crest factor is eliminated.

The arc current crest factor is the ratio of peak to RMS arc current. The greater this figure, the greater is the stress to the tube electrodes during tube operation. Stress

to the electrodes results in loss of electron emissive material from the electrode surface which is deposited on the tube wall and is observed as tube "end blackening". In a preferred form of the present invention a crest current factor of 1.3 to 1.5 is achieved, dependent upon the tube type.

The driver is arranged to produce a fully symmetrical tube arc wave form. This prevents the phenomena of mercury vapour migration within the tube. Mercury vapour migration ultimately results in light output reduction at one end of the tube necessitating tube replacement. A fully symmetrical arc wave form prevents mercury vapour migration and ultimately results in increased tube life.

The closed loop arc current control system of the invention holds the arc current constant over a wide range of DC supply voltages (typically 22 to 33 volts DC for a nominal 24 volt supply).

As the tube volt-ampere characteristic is only temperature dependent, it is inherent that holding tube arc current constant results in constant tube arc power and hence constant light output at a given temperature. Thus the operating arc power and the light output can be selected to suit the individual application.

For example, in an energy saving, heat dissipation conscious application of the driver of the invention, the selected value of arc current may be selected such that the tube light output is a percentage, less than 100, (preferably 80 to 90%) of rated output e.g. 87 per cent. This allows one to choose a required combination of tube radiated heat, tube light output and unit power consumption. By selecting and controlling the tube arc current one contols the tube arc power. However the arc current selected should fall within the tube preferred range.

The driver is particularly designed for temperature sensitive situations, for example where the tube is to light shelving, confined spaces or refrigeration units. Independently of the closed loop control therefore the

invention concerns a driver which is arranged to run a tube at tube arc power of 80 to 90% of the tube rated power and at a constant arc current crest factor below 1.7 and preferably in the range 1.5 to 1.3.

The means for providing the reference signal comprises a resistive, divider derived, voltage from a reference voltage. Selection of the appropriate divider is via a jumper link system. The tap position by which the tube is connected to the secondary winding of the arc transformer is preferably also selected by a jumper link selection system. By these means a wide variety of tube types and styles can be used and the exactly right conditions for each can be selected in seconds. In order to adjust the driver for the selected tube type, two header selections must be made. The first selection is used to select one of a number (six to eight for example) of resistor pairs which determine the tube arc current. The second selection is used to select one of a number of taps from the transformer secondary driving the tube arc. This second selection is necessary in order to ensure compliance with the tube operating arc voltage. With this arrangement the design is capable of driving tubes within the range 10 to 40 watts and all that is required to tailor the system to a specific tube is the correct selection of the arc current resistor pair and the correct selection of the transformer tap position.

The arc current flow circuit includes no dissipating device forming an arc current limiting element and this leads to higher efficiency. Efficiencies in the range 80 to 85 per cent are normally achieved with the circuit described.

The drive voltage adjustment means comprises a low differential current source having a voltage output V2 and a switched mode power supply unit, arranged to receive the supply voltage V and having an output voltage V1 arranged to be supplied to the low differential current supply unit. The voltages V2 and V1 are measured by the switched mode supply unit which is arranged to hold the current source differential V2 minus V1 constant. The current source is

programmed by the error signal and the switched mode supply unit is programmed from the current source. The switched mode power supply unit again gives high efficiency of operation. The switched mode approach also allows the unit a wide operating voltage range of 22 to 33 the volts DC for a nominal input voltage of 24 volts.

The high efficiency enables the use of the driver in confined spaces where excessive heat generation would be a problem and in energy saving situations.

A strike oscillator is provided for providing a strike voltage, higher than the arc drive voltage, to the tube arc at start up. Additionally a heater circuit is provided for providing a current through the electrodes to heat these for a short period before each strike up attempt. For example a strike up attempt may consist of electrode preheating for a period e.g. approximately 1.5 seconds followed by the application of a high voltage strike pulse across the tube arc. According to another feature of the invention means are provided for detecting whether or not the tube strikes. If the tube strikes the strike oscillator is disabled and the arc transformer driver enabled and the closed loop arc current control will become operative. If the tube fails to strike the arc transformer driver continues to drive but will be inhibited after a brief pause period of for example approximately 2.5 seconds. The strike sequence will then be reinitiated, that is the preheating followed by the application of strike voltage is repeated. Means are provided for repeating this sequence for a predetermined number of strike attempts, for example 6 to 8, following which the attempt sequence will be terminated. If striking does not occur during this sequence the unit will shut down and remove potential from the tube terminals. A shut down would, for example, result with a worn out tube or if the tube were absent. A shut down may be reset by removal and reapplication of power.

Should a tube be removed during operation or become extinguished for any other reason then the system is arranged

to re-enter restrike mode whereby the strike attempt sequence will restart. If the tube is replaced within the predetermined duration (e.g. 25 seconds) then the tube will be restruck. If the tube is not replaced the system will shut down. This feature enables careful tube changing whilst the system is running provided that one is aware of the potential hazards involved.

Brief Description of the Drawings

One embodiment of fluorescent tube driver and lighting system, in accordance with the invention, will now be described, by way of example only, with reference to the accompanying drawings of which:-

Figure 1 is a block circuit diagram of a driver and tube,

Figure 2 shows a plot of arc current and arc voltage provided by the driver of Figure 1,

Figure 3 show details of the circuitry of Figure 1 and is divided into parts 3a to 3f which fit together as seen in Figure 3,

Figure 4 shows the bobbin of the arc transformer of Figure 1, and

Figure 5 shows the bobbin of the electrode transformer of Figure 1.

Detailed Description of one Embodiment

Referring to the block diagram of Figure 1, a hot cathode fluorescent tube 12 has electrodes 13, 14 and is arranged to be driven from a 24 volt nominal DC supply 15 as the power source. In order to preheat the electrodes before strike up, respective electrodes 13, 14 are connected in series with secondary windings 16, 17 of an electrode heating transformer 18, the primary winding 20 of which has an intermediate part 19 thereof connected to the DC supply 15. The ends of the primary winding are connected to an electrode

tranformer push/pull driver 21.

A tube arc waveform transformer 22 has a primary winding 23 connected across an arc transformer push/pull driver 24 and has a secondary winding 25 one end 26 of which is connected via line 27 and a resistor Rs to the electrode 14 to provide the tube arc current supply. An arc transformer jumper tap selection unit 28 connects a selected tap off point of the secondary winding 25 via line 30 to the electrode 13.

Lines 31, 32 connected across the resistor Rs provide an input measure of the arc current wave form to the input of an RMS-DC convertor 33, the output of which, on line 34, provides a DC voltage signal (representing the measured RMS arc current which is normally in the range 230 to 285 mA) to one input of an integrating error amplifier 35. The output from this circuit is a DC voltage proportional to the RMS tube arc current on a 1:1 basis ie one volt DC equals one amp RMS of arc current. A reference voltage source 36 provides a reference voltage of 15 volts and this is connected via a resistor 37 to a jumper switch RMS arc current selector header unit 38 with the connection between resistor 37 and unit 38 connected to the other input of the integrating error amplifier 35. The RMS arc current selection header unit 38 comprises a plurality of resistors in parallel connected to earth and the jumper switch allows one of these dividers to be tapped thus providing a selected RMS arc current programme voltage (on the basis of one volt equals one amp) to the other input of the integrating error amplifier. The output (error signal) from the amplifier 35 is connected on line 40 to a programme input 39 of a low differential current source unit 41, the current output of which is connected by line 42 and diode 43 to an intermediate connection of the primary winding 23 of the arc transformer 22. This current I is the drive current to the arc transformer (1.2 to 2 amps). A switched mode voltage source unit 44 has an input voltage V (nominally 24 volts) on line 45 from the DC supply 15 and an output voltage V1 on line 46 which is supplied as an input to

the low differential current source unit 41. The voltages on lines 46 and 42 are fed back to the voltage source unit 44 which is arranged to hold the current source differential V1 minus V2 constant.

A strike oscillator 47 is connected via diode 48 and line 49 to the midpoint of the primary winding 23 of the transformer 22. A strike capacitor Cs is connected between the line 49 and earth and is arranged to be charged up by the strike oscillator.

A system control unit 50 includes a multi-strike attempt timing circuit 51 and a "give up" circuit 52, each connected to receive a start up signal on line 53 from a power up reset/start switch unit 54. The timing circuit 51 has a phase 1 output on line 55A to enable the electrode transformer driver 21 and the strike oscillator 47, and a phase 2 output on line 55B to enable the arc transformer driver 24. The give up circuit 52 has an output on line 56 arranged to give a shut down signal to the circuits 51, 21 and 24. The output of the error amplifier 35 is also connected on line 57 to an input of the multi-strike attempt timing circuit 51 and the give up circuit 52 to indicate whether or not the tube has been struck. A short circuit overload shut down circuit 58 is connected across the lines 31, 32 and arranged to detect a short circuit and when so detected to supply a shut down signal to the programme input of the low differential current source 41.

As indicated at the top of Figure 1 the circuit DC supply 15 is derived from an original DC supply 60 via a reverse polarity over current protection unit 61 and a filtering unit 62.

The system operates as follows. On system power up, the power up reset generator 54 issues a reset/start pulse to the system controller 50.

Initially, the system controller enters phase one which involves enabling the strike oscillator and enabling the tube-end electrode pre-heat system. The strike oscillator is a simple flyback convertor which is used to

charge the strike capacitor, C_s, to approximately 91 volts which is later stepped up by the arc transformer to generate a high tension tube strike potential.

The electrode pre-heat system consists of a push-pull step down transformer configuration generating two galvanically isolated electrode pre-heat voltages.

During phase one which is of approximately 1.5 seconds duration, the main arc transformer push-pull drive system is disabled.

During phase two, the strike oscillator and the electrode pre-heat system are disabled and the arc transformer push-pull drive is enabled. Initially, drive to the arc transformer results in the voltage across C_s being stepped up by the transformer ratio. This results in the generation of a high potential across the tube arc resulting in a tube strike. The result is a decaying alternating voltage across the tube arc as the strike capacitor discharges.

During initial strike period, a current flow is established into the tube arc which has the effect of activating the system arc current control loop.

Current flowing to the arc results in an alternating arc current wave form across Rs, a measure of which is passed to the RMS to DC convertor 33, the output from which is a DC voltage proportional to the RMS tube arc current. The voltage from the RMS output is compared in the error amplifier 35, to a selected programme voltage (at input 39) representing the desired tube RMS arc current. The amplifier output (error signal) on line 40 is utilised to programme the linear low differential current source 41, the resulting output from which is fed to the arc transformer primary winding.

The current flow in the primary winding is stepped down by the transformer ratio to produce an arc current which, in a matter of milliseconds, is adjusted to the value set at the error amplifier programme input 39, by nature of the arc current feedback taken from Rs (as described). This

provides a closed loop servo control system maintaining substantially constant the tube arc current by varying the amplitude of the arc current waveform.

The net effect is that the tube strike is initiated by the discharge of the strike capacitor but maintained by the arc current control loop. By nature of the fact that the tube volt/ampere characteristic is fixed, the desired arc current results in a fixed arc power.

If the tube arc fails to strike on application of the strike voltage, then a signal from the output of the error amplifier, on line 57, which signal is indicative of a strike failure, is utilised to force the system control circuit to re-enter the phase 1 of the strike procedure and thus restart the strike sequence.

Repetitive strike failure is measured by the give up circuitry 52, which after a predetermined period corresponding to a predetermined number of failures commands a system shut down on line 56, whereby both the electrode and arc drive systems are disabled. This action will occur after approximately 6 to 8 strike attempts or approximately 25 seconds.

The arc transformer programmable current source 41 is of linear design and is designed to operate at low differential voltages to attain low dissipation. As the output voltage V2 from this current source will be determined by the tube arc voltage as set by the transformer ratio (V2 is typically about 18 volts), and the current source differential will be hundreds of millivolts (V1 minus V2 is typically about 0.38 volts), the switched mode power supply 44 is employed to efficiently reduce the 22 to 33 volt (nominal 24 volts) supply 15 to the voltage attained at V1. The switched mode power supply unit monitors the current source differential voltage (V1-V2) and holds this value constant irrespective of the voltage of V2 dictated by the tube.

It is important to realise that the current source 41 is programmed by the error amplifier 35 and the switched

mode power supply 44 is programmed from the current source in that order.

The ratio of the arc transformer is selected such that Vp is placed in the optimum operating range of 13 to 18 volts.

The arc transformer push-pull driver 24 is chosen to produce a 90 to 95 per cent duty cycle, symmetrical arc voltage wave form of a frequency 32 KHz nominal. An example of an arc voltage wave form and resulting arc current wave form plotted against time, as achieved by the Figure 1 circuit is shown in Figure 2. The fixed duty cycle of 90 to 95 per cent, attains the low arc current crest factor of typically 1.3 to 1.5 dependent on the tube type. The wave form has sharply defined on off characteristics.

The electrode drive push-pull system results in the production of two electrode drive voltages which again are symmetrical and of frequency 36 KHz nominal.

This system is designed to cope with a wide range of standard "off the shelf" tubes and for this purpose it has the ability to deliver tube arc powers of between 10 and 40 watts and is quickly configurable to the desired tube style by the appropriate placement of the two printed circuit style jumper links 38 and 28 which are used to select tube arc current and tube arc voltage. For example, eight dividers may be provided for generating the arc current programme voltages required for six popular tubes with provision for two spares and four arc transformer tap selection positions are provided in the unit 28. By utilisation of the jumper link selection system, it is possible to select the tube type within seconds. The first selection is used to select one of the number of resistor pairs in the unit 38 which determine the tube arc current. The second selection is used to select one of a number of taps (for example four) from the transformer driving tube arc in the system 28. This second selection is necessary in order to ensure compliance with the tube operating arc voltage. In the circuit described six tubes are catered for with two spare uncommitted tube types.

The six tubes are 18 watt two foot (61cms), 30 watt three foot (91.4cms), 36 watt four foot (121.9cms), 36wpl, 38 watt three foot six inches (106.7cms) and 40wpl. It should be emphasised however that the design is capable of driving any tubes within the range 10 to 40 watts and is by no means limited to the above types.

Figure 3 shows the implementation of the described system which may be related to the block diagram of Figure 1 by reference to the following circuit section descriptions.

Section 1 Switched mode voltage source
Section 2 Low differential current source
Section 3 Integrating Error Amplifier
Section 4 RMS to the DC convertor
Section 5 System control
Section 6 RMS arc current selection header and resistors
Section 7 Arc transformer push-pull driver
Section 8 Strike oscillator
Section 9 Electrode transformer push-pull driver
Section 10 Electrode transformer
Section 11 Arc transformer
Section 12 Arc transformer tap selection
Section 13 Power-up reset circuit
Section 14 Short circuit/overload shut-down

With reference to Figure 3, the 24 volt nominal DC supply is applied to J1-1(+VE) and J1-3(OV). D1 provides protection from reverse connection of the 24 volt supply. The four terminal connection to the tube is made at J2. One electrode should be connected to J2-1 and J2-2 whilst the second electrode is connected to J2-3 and J2-4. The connections and types and values of the parts are shown on the Figure.

Section 1 of Figure 3 forms an efficient step-down switched mode voltage source and Section 2 forms a low differential linear current source. The function of the switching regulator is to hold the current source differential voltage, TP14 to TP15, constant at 380mV thus maintaining low current source dissipation. The switched

mode voltage source operates at approximately 72KHz and is based around a pulse width modulation control device, U4 type IP494.

A voltage of 380mV greater than the voltage at TP15 is generated at U4 pin 2 by the network R27, D11, D10, Q4, R23, U3, R24, R25. This voltage is utilised to program the switched mode supply to issue an output voltage at TP14 of TP15 + 380mV thus maintaining 380mV differential from TP14 to TP15.

The controlled pulse width output from U4 pin 8 and 11 drives the main switching mosfet Q19 via buffer stage Q5 and Q6. Q19 forms the switching element of a flyback step-down configuration which consists of a flyback inductor L2, a back emf catch diode D15 and a storage capacitor C30.

A voltage waveform representative of the tube arc current waveform and derived from R85 is fed to the RMS to DC convertor (Section 4) via the sense + and sense - lines. The convertor is not a true RMS to DC conversion circuit but a quasi design which operates sastisfactorily provided that, as in this case, the input waveshape and duty cycle are fixed. The convertor operates by first of all buffering the signal via voltage follower U7 and removing front edge waveform overshoot via low pass filter R55/C19. The resulting waveform is then applied to the peak detector consisting of U6/D12/R37/C22 and R59 which results in a voltage being developed across C22 which is representative of the peak arc current. A voltage representative of the RMS arc current is then generated by passing the peak voltage via a buffer amp (U5A) to a potential divider R33/R34 which attenuates the signal by the arc waveform duty cycle factor (95% or X 0.95) resulting in a voltage representative of the RMS arc current at TP5.

The integrating error amplifier (Section 3) compares the voltage representing achieved RMS arc current at TP5 with a voltage representing the required RMS current which is formed by the RMS arc current selection header system (Section 6). The header HD1 allows the selection of any one

from eight possible potential dividers.

Both the achieved RMS arc current voltage and the required RMS arc current voltage utilise a scaling factor of 1 volt DC = 1 Amp RMS of arc current.

The output from the error amplifier, U5D pin 14, is used to program the current source (Section 2) which in turn issues a current to the arc transformer primary which is stepped down by the arc transformer to form the arc current.

Section 7 is the arc transformer push-pull driver stage. U9 (an IP494) is a pulse width modulator driver IC but configured to deliver a fixed push-pull duty cycle of 95%. The 95% duty cycle resulting in 5% dead time when neither push or pull drivers are active, ensures that there is no possibility of both push and pull drivers being energised simultaneously due to drive signal overlap. The push-pull signals originating from U9 pins 9 and 10 are buffered via Q15/16/17/18 and passed to the drive mosfets Q21 and Q22 which drive the two arc transformer primary windings. Note that the two driving mosfets Q21 and Q22 drive the primary windings in opposing phase to generate the push-pull operating mode. U9 operates at a frequency of 62 KHz as determined by 1.1/R73 C24 which due to the push-pull drive nature, results in an arc waveform of half this value ie 31KHz.

The electrode transformer push-pull drivers (Section 9) is of similar design to the arc transformer push-pull driver stage. This stage drives the electrode transformer (Section 10) for approximately 1.5 seconds during the strike sequence after which it is inhibited. The operating frequency is 74KHz as determined by 1.1/R71, C23 which results in an electrode waveform frequency of 37KHz.

Section 8 represents the strike oscillator the purpose of which is to charge strike capacitor C32 to approximately 91V. The oscillator is a simple flyback configuration with L1 forming the flyback inductor and operates at 65 to 85KHz.

The complete system is controlled and synchronised by

the system controller (Section 5) which is reset on power-up by the power-up reset circuit (Section 13).

The two phases of the strike sequence are represented by the logic state of the P/$\overline{S \& R}$ line (Prime, strike and run). With P/$\overline{S \& R}$ in the high state, Phase 1 of the strike sequence is initiated with the electrode transformer push-pull driver enabled via DP1C, the strike oscillator enabled due to Q11 being in the "off" state and the arc transformer push-pull driver being disabled due also to Q11 being in the "off" state.

With P/$\overline{S \& R}$ in the low state, Phase 2 of the strike sequence is initiated where the electrode transformer push-pull driver is disabled via DP1C, the strike oscillator is disabled due to Q11 being in the "on" state and the arc transformer driver is enabled due also to Q11 being in the "on" state.

By utilising a signal from the output error amplifier derived by Z2, R12, R16 and Q3, the control circuit is able to detect a tube strike failure and thus time a period by time constant R17/C8 during which multi-strike attempts are made via repeated cycling of Phase 1 and Phase 2 strike procedures. Failure to strike within this period results in a system shut-down by U2A pin 2 switching low into the "give up " state shutting down both electrode and arc drive waveform generators.

Values for the arc current set resistors R40 to R47 are selected such that six tubes may be catered for with two spare uncommitted tube types. The six tubes used in this example are 18W 2 foot (61cms), 30W 3 foot (91.4cms), 36W 4 foot (121.9cms), 36WPL, 38W 31/2 foot (106.7 cms) and 40WPL.

The value of arc current selected for each tube results in a tube arc power which is 82% that of rated tube arc power. This provides a highly desirable combination of tube radiated heat, tube light output and system power consumption. The arc current may however be tailored to the requirements of the individual.

A suitable arc transformer design for the above tube

range is given in Figure 4. The table below shows the required transformer tap selections made on the arc transformer tape selection header and the corresponding RMS arc current values selected via the RMS arc current selection header resulting in 82% of rated arc power.

On comparative test run using a driver D in accordance with the invention as disclosed herein and a 36W rated tube, run at a total tube power of 29.5W, as compared with a known system C run at 50Hz mains voltage and at the 36W rated arc power, with ambient temperature of 21°C to 22.5°C, gave the following results.

	Total Tube Power	Light Output % of Mains	T1	T2	T3	Hottest Component Temperature
C	36W	100	43	19.3	19.3	53.0 (Ballast)
D	29.5W	87	24	15.2	15.2	17.0 (Heatsink)

Where T1, T2, T3 are all temperatures in degrees centigrade above ambient temperature respectively taken at the tube electrodes, one quarter of the tube length from the electrodes, and midpoint of the tube.

Tube Type	RMS Arc Current for 82% Rated Arc Power	Required Transformer Tap Pin Number
18W 61cms	250mA	10
30W 91.4cms	250mA	11
36W 121.9cms	275mA	11
36WPL	285mA	11
38W 106.7cms	285mA	11
40WPL	230mA	12

A design for the electrode transformer is shown in Figure 5.

Both transformers are based around Philips RM10 formers. In order to obtain a high arc transformer operating efficiency, a low loss ferrite material should be utilised. As the arc transformer operates at 32KHz, a suitable low loss ferrite at this frequency is either Philips 3C85 ungapped or Siemens N41 ungapped. The design shown in Figure 4 operates at 170 to 230mT (Milli-Teslas) which ensures freedom from magnetic saturation. A similar grade of ferrite may be utilised for the electrode transformer.

Figure 4 shows the transformer bobbin and pins for forming the arc transformer 22. The windings are not shown but all the primaries are wound in the same direction and all the secondaries are wound in the same direction. The bobbin is a Philips 4322-021-34060 with 12 pins. The windings are as follows:

First primary, 12 turns, 0.75 millimetre diameter ECW
Second primary, 12 turns, 0.75 millimetre diameter ECW
First secondary, 48 turns, 0.375 millimetre diameter ECW
Second secondary, 12 turns, 0.375 millimetre diameter ECW
Third secondary, 24 turns, 0.375 millimetre diameter ECW
Fourth secondary, 26 turns, 0.375 millimetre diameter ECW.

The first primary starts at pin 1 and finishes at pin 3, the second primary starts at pin 4 and finishes at pin 6, the first secondary starts at pin 7 and finishes at pin 9, the secondary starts at pin 9 and finishes at pin 10, the third secondary starts at pin 10 and finishes at pin 11 and the fourth secondary starts at pin 11 and finishes at pin 12.

The primaries must be put on to the bobbin first and interwinding tape should be used between the primaries and secondaries and between secondary one and secondary two and over the outside.

Figure 5 shows the transformer bobbin and pins for the electrode transformer 17. The bobbin is a Philips 4322-021-34730 with 12 pins and all windings are in the same

direction and made from 0.4 millimetre diameter wire.

Winding 1 starts at pin 10, has 48 turns and finishes at pin 3.

Winding 2 starts at pin 12, has 48 turns and finishes at pin 1.

Winding 3 starts at pin 4, has 12 turns and finishes at pin 9.

Winding 4 starts at pin 6, has 12 turns and finishes at pin 7.

Insulating tape rated at 80°C continuous should be used between each winding and on the external winding.

It should be emphasised that the design shown is capable of driving any tube in the range 10 to 40 watts and is by no means limited to the above selection. It can be adapted to operate tubes of higher voltage. All that is required to tailor the system to a specific tube is the correct selection of the RMS arc current program voltage and correct design of the arc transformer winding.

If the arc transformer is required to be modified in order to comply with a specific tube not mentioned, then one should retain the same primary winding as Figure 4, but select the secondary winding such that TP7 (the primary tap) is placed at approximately 17.5 volts with the RMS tube voltage at the desired value.

If V_T = RMS voltage of tube at desired tube power
D = Duty Cycle of drive = 0.95
V_{TP7} = Voltage at TP7 = 17.5V
N_S = Number of secondary turns
N_P = Number of primary turns = 12

Then $NS = \frac{V_T N_P}{V_{TP7}} \times \frac{1}{D}$

If the RMS arc current is required to be modified to a value not available from the existing values, then a spare

resistor/header position should be utilised to set the desired arc current program voltage ie R41 and the value for R41 calculated as follows:

If R_{41} = Value of R41
V = Voltage representing RMS arc current
1 VDC = 1V RMS of arc current
R_{61} = Value of R61 = 20k

$$R_{41} = \frac{R_{61}}{(15/V-1)}$$

While one embodiment of the system has been described in detail for use with a low voltage 24 volt nominal source, the concepts can be applied to a system run from other voltages or from any conventional mains voltage source converted to produce a DC voltage supply, and with appropriate change of component values.

CLAIMS

1 A fluorescent tube driver arranged to be supplied by a voltage source (15) and having a tube driver output with a frequency of oscillation in the range 15 to 50 KHz, the driver comprising an arc waveform transformer (22), the primary winding (23) of which is supplied with a variable drive current derived from the voltage source, and the secondary winding (25) of which is adapted to be connected to the electrodes (13, 14) of a fluorescent tube (12), such that in use an alternating tube arc current (Figure 2) will flow through the secondary winding and tube, and including a closed loop control system (31-44) characterised in that the closed loop control system is arranged to maintain substantially constant the tube arc current by varying the amplitude of arc current waveform.

2 A driver according to claim 1 characterised in that the voltage source is a low voltage source (less than 50 volts nominal).

3 A driver according to claim 2 characterised in that the low voltage source is a 24 volt nominal supply.

4 A driver according to any of claims 1 to 3 characterised in that the frequency of oscillation is substantially 32 KHz nominal.

5 A driver according to any of claims 1 to 4 characterised in that the arc current is selected for a particular tube such that the tube arc power is less than 90 per cent of the rated tube power.

6 A driver according to any of claims 1 to 5 characterised by an arc transformer push/pull driver (24) for the arc transformer, which driver is selected to give a symmetrical arc wave form having a substantially constant wave form duty cycle.

7 A driver according to claim 6 characterised in that the duty cycle is in the range 90 to 95 per cent.

8 A driver according to claim 6 or claim 7 characterised in that it is arranged, for any particular tube setting, to maintain at a constant value the arc crest

factor, the constant value being in the range 1.3 to 1.5.

9 A driver according to any of claims 1 to 8 characterised in that the arc current flow circuit includes no dissipating device forming an arc current limiting element.

10 A driver according to any of claims 1 to 9 characterised in that the secondary winding (25) of the arc transformer is arranged to be connected to the fluorescent tube (12) from a selected one of a plurality of tap points on the secondary winding and the selection of the tap point is by a jumper link selection system (28).

11 A driver according to any of claims 1 to 10 characterised in that the drive voltage adjustment means comprises a low differential current source (41) having a voltage output V2 and switched mode power supply unit (44) arranged to receive the supply voltage V and having an output voltage of V1 arranged to be supplied to the low differential current supply unit, the outputs V2 and V1 being measured by the switched mode supply unit which is arranged to hold the current source differential V2 minus V1 constant.

12 A driver according to claim 11 characterised in that the current source unit (41) is programmed by the error signal and the switched mode supply unit (44) is programmed from the current source unit in that order.

13 A driver according to any of claims 1 to 16 including a strike oscillator (47) arranged at start up to supply a strike voltage to the tube arc, which voltage is higher than the normal running arc voltage, characterised by means (50, 51, 57) for detecting whether or not a strike has occurred and arranged to initiate a re-strike attempt if an attempted strike has failed, and means (52) arranged to initiate shut down after a predetermined number of strike attempts or a predetermined time period.

14 A circuit according to claims 13 characterised by means (57) adapted to detect removal or failure of a tube and to reinitiate multi-strike attempts.

15 A lighting system including a tube driven by a driver

according to any of the preceding claims.

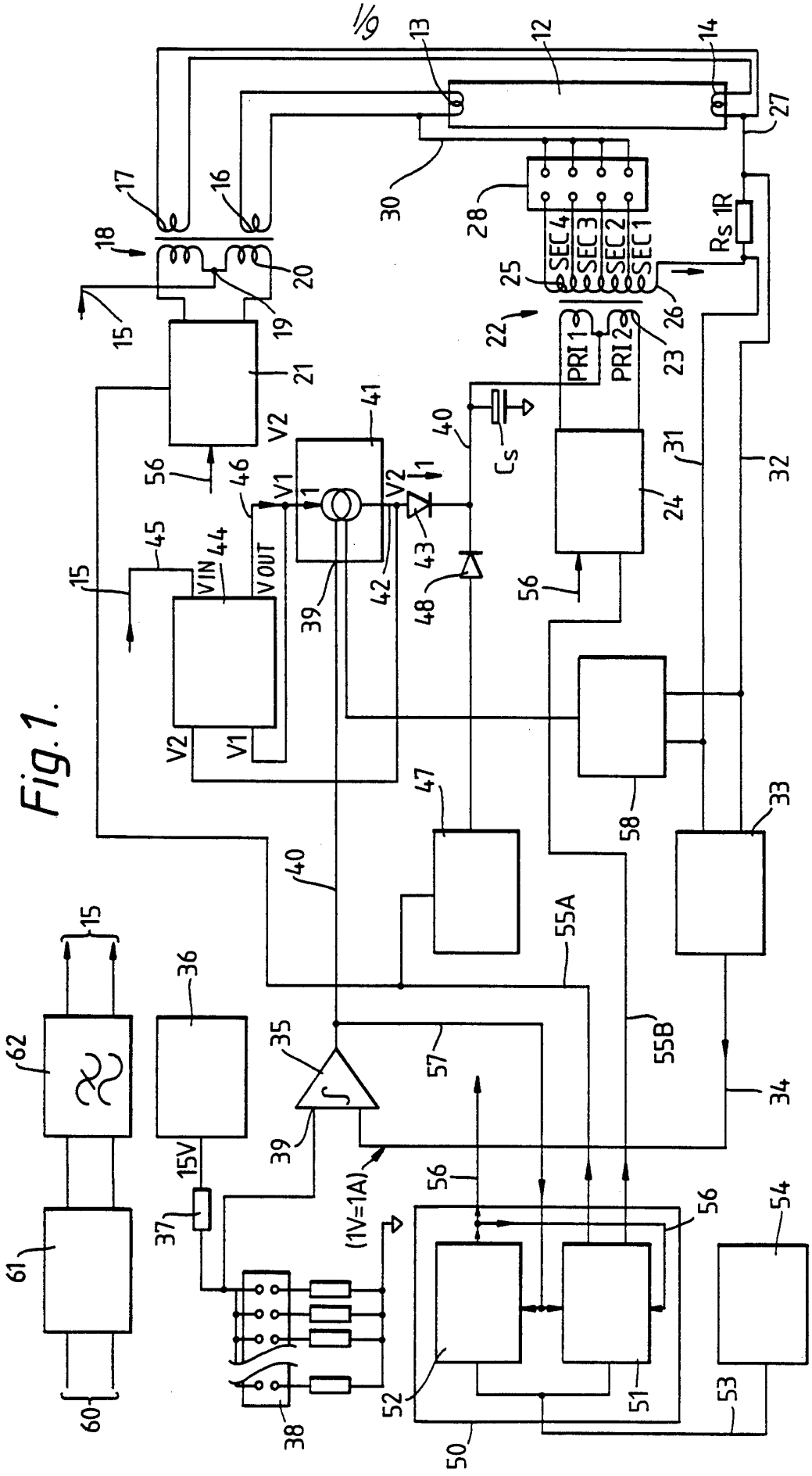

Fig.1.

Fig. 2.

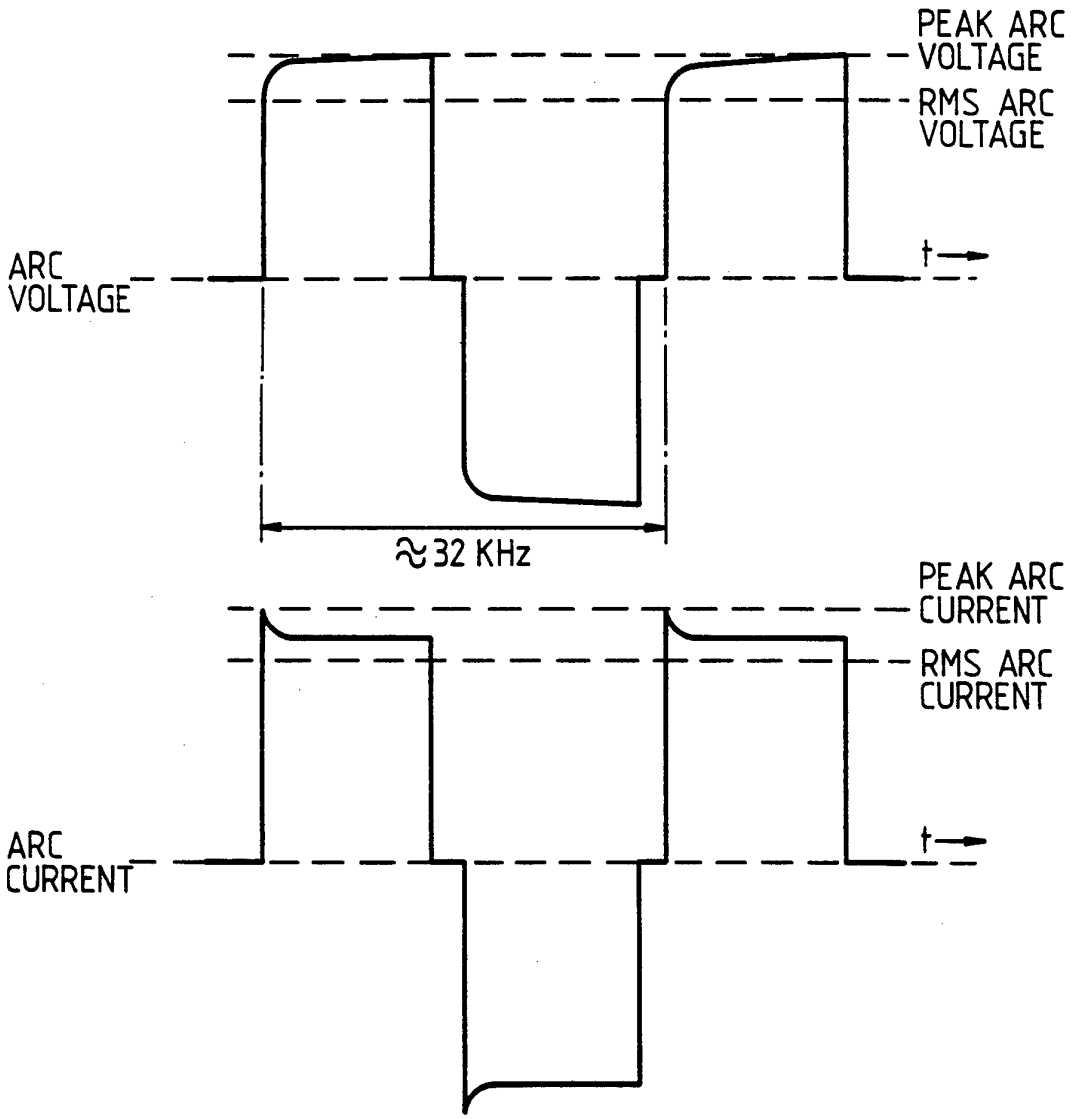
PEAK ARC VOLTAGE
RMS ARC VOLTAGE
ARC VOLTAGE
t
≈32 KHz
PEAK ARC CURRENT
RMS ARC CURRENT
ARC CURRENT
t

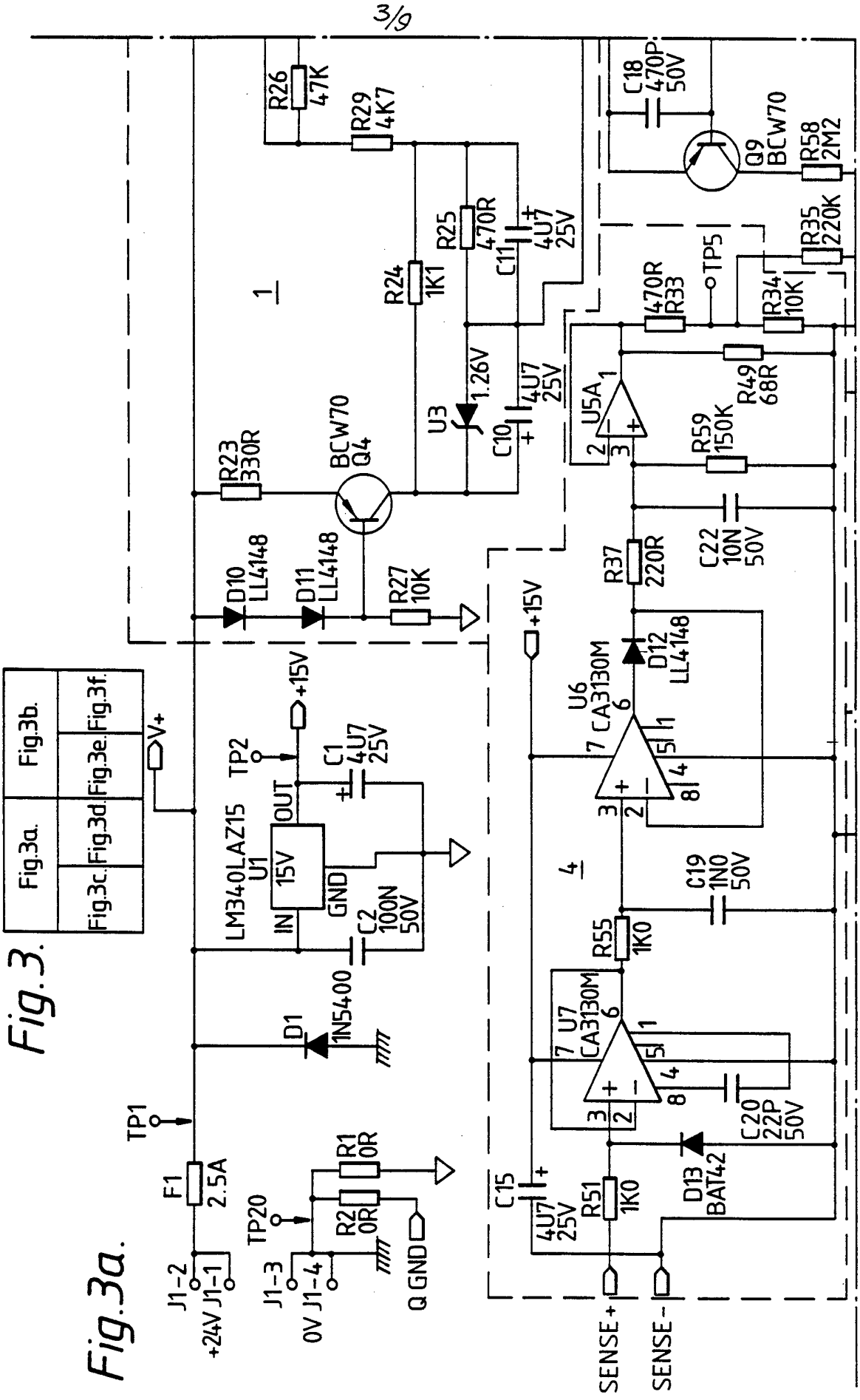
Fig.3a.
Fig.3.
Fig.3a.
Fig.3b.
Fig.3c.
Fig.3d.
Fig.3e.
Fig.3f.
V+
+15V
TP1
TP2
TP20
F1
2.5A
J1-2
+24V J1-1
J1-3
0V J1-4
R1
0R
R2
0R
Q GND
LM340LAZ15
U1
15V
IN
OUT
GND
C1
4U7
25V
C2
100N
50V
D1
1N5400
R26
47K
R29
4K7
R24
1K1
R25
470R
C11
4U7
25V
U3
1.26V
C10
4U7
25V
R23
330R
BCW70
Q4
D10
LL4148
D11
LL4148
R27
10K
C18
470P
50V
Q9
BCW70
R58
2M2
R35
220K
TP5
R34
10K
470R
R33
U5A
R59
150K
R49
68R
C22
10N
50V
R37
220R
D12
LL4148
U6
CA3130M
C19
1N0
50V
R55
1K0
U7
CA3130M
C20
22P
50V
D13
BAT42
C15
4U7
25V
R51
1K0
SENSE+
SENSE-
1
4

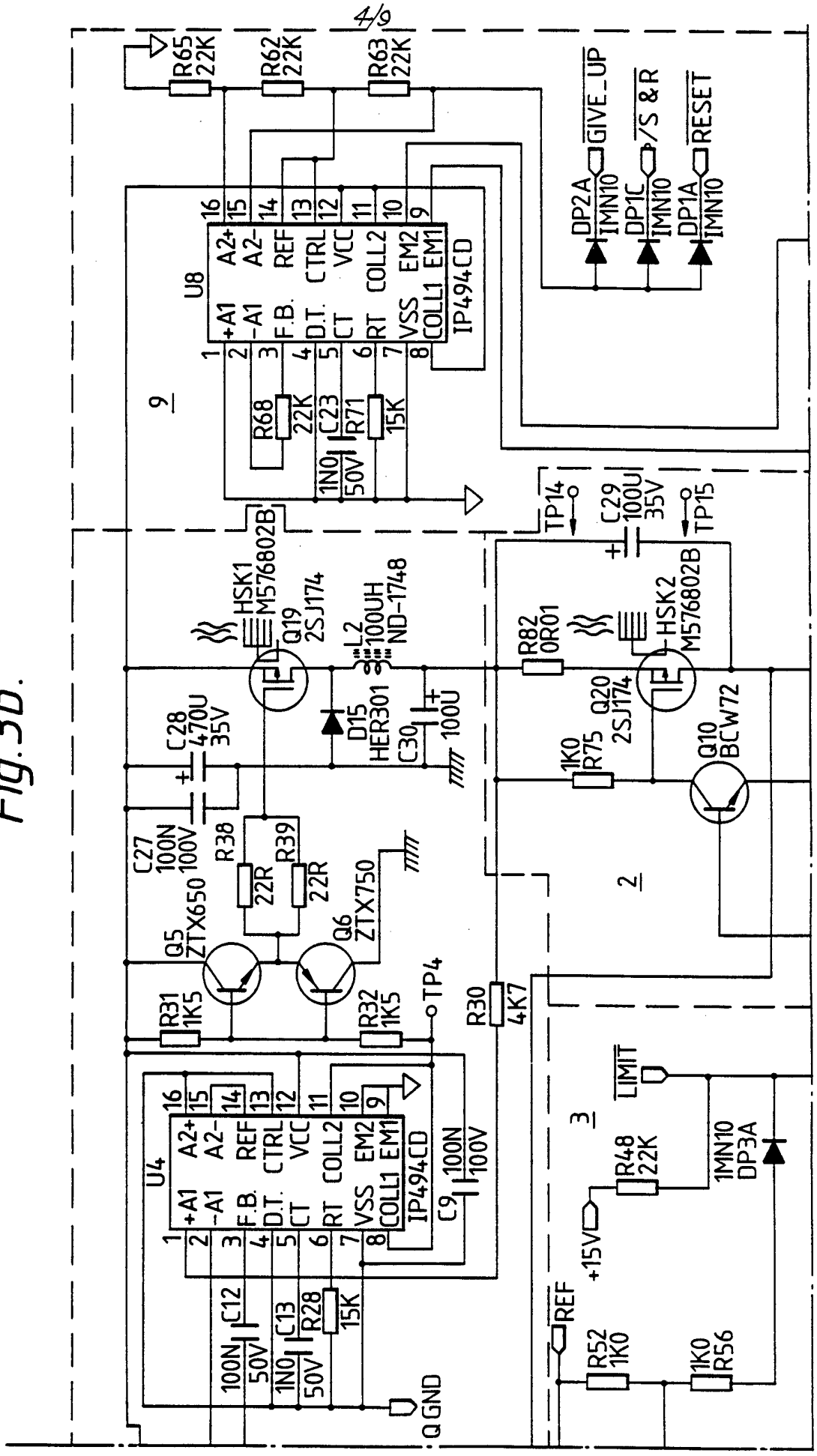
4/9
R65 22K
R62 22K
R63 22K
U8
IP494CD
R68 22K
C23 1N0 50V
R71 15K
DP2A IMN10 GIVE_UP
DP1C IMN10 /S &R
DP1A IMN10 RESET
TP14
C29 100U 35V
TP15
HSK1 M576802B
Q19 2SJ174
L2 100UH ND-1748
HSK2 M576802B
R82 0R01
Q20 2SJ174
C28 470U 35V
D15 HER301
C30 100U
1K0 R75
Q10 BCW72
C27 100N 100V
R38 22R
R39 22R
Q5 ZTX650
Q6 ZTX750
R31 1K5
R32 1K5
TP4
R30 4K7
U4
IP494CD
C9 100N 100V
LIMIT
R48 22K
1MN10 DP3A
+15V
REF
C12 100N 50V
C13 1N0 50V
R28 15K
R52 1K0
1K0 R56
GND
9
2
3

Fig. 3b.

Fig.3c.

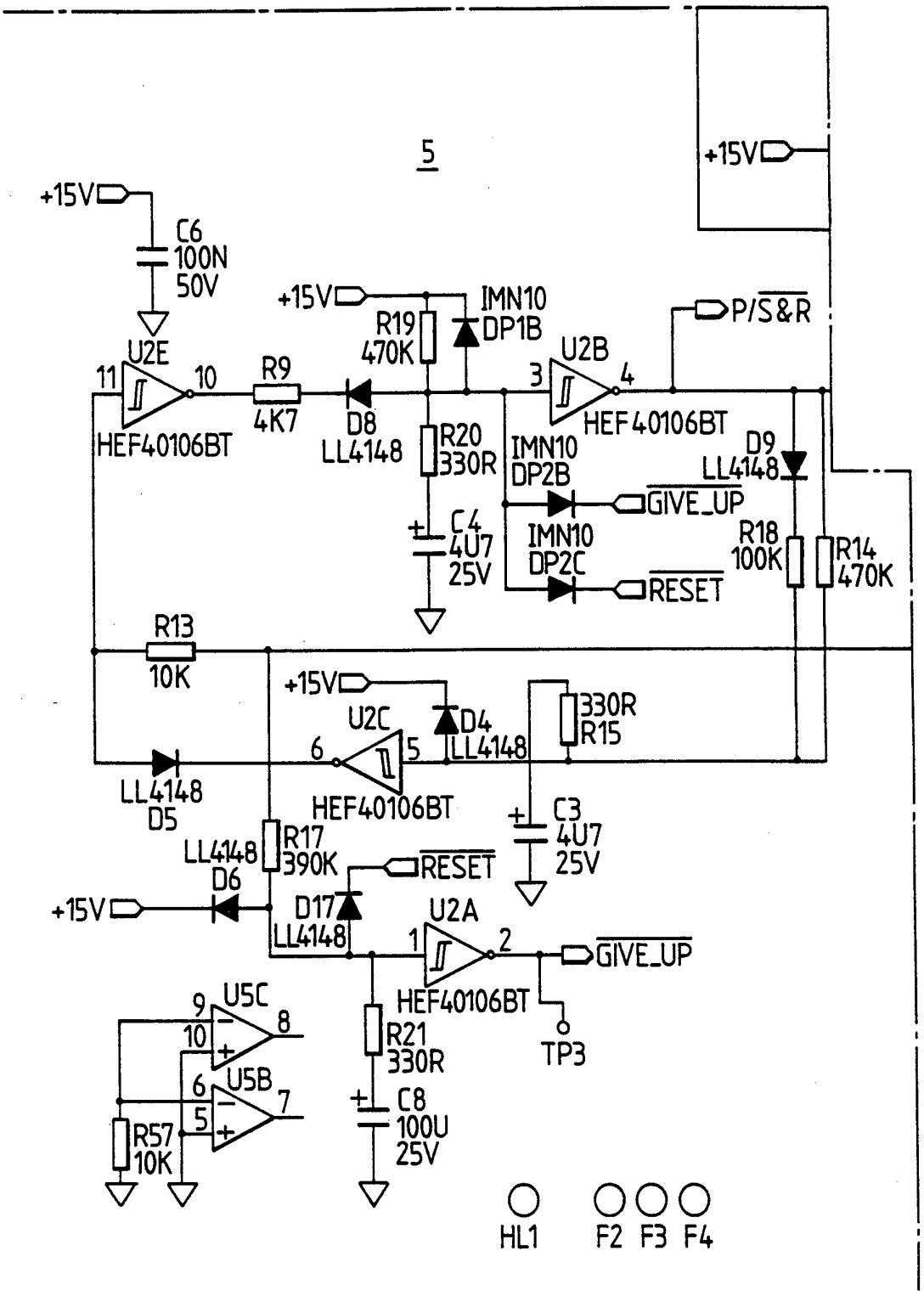
5
+15V
C6
100N
50V
U2E
HEF40106BT
R9
4K7
D8
LL4148
R19
470K
IMN10
DP1B
R20
330R
C4
4U7
25V
U2B
HEF40106BT
P/S&R
IMN10
DP2B
GIVE_UP
IMN10
DP2C
RESET
D9
LL4148
R18
100K
R14
470K
R13
10K
LL4148
D5
U2C
HEF40106BT
D4
LL4148
330R
R15
C3
4U7
25V
LL4148
D6
R17
390K
RESET
D17
LL4148
U2A
HEF40106BT
GIVE_UP
TP3
U5C
U5B
R57
10K
R21
330R
C8
100U
25V
HL1
F2
F3
F4

Fig.3e.

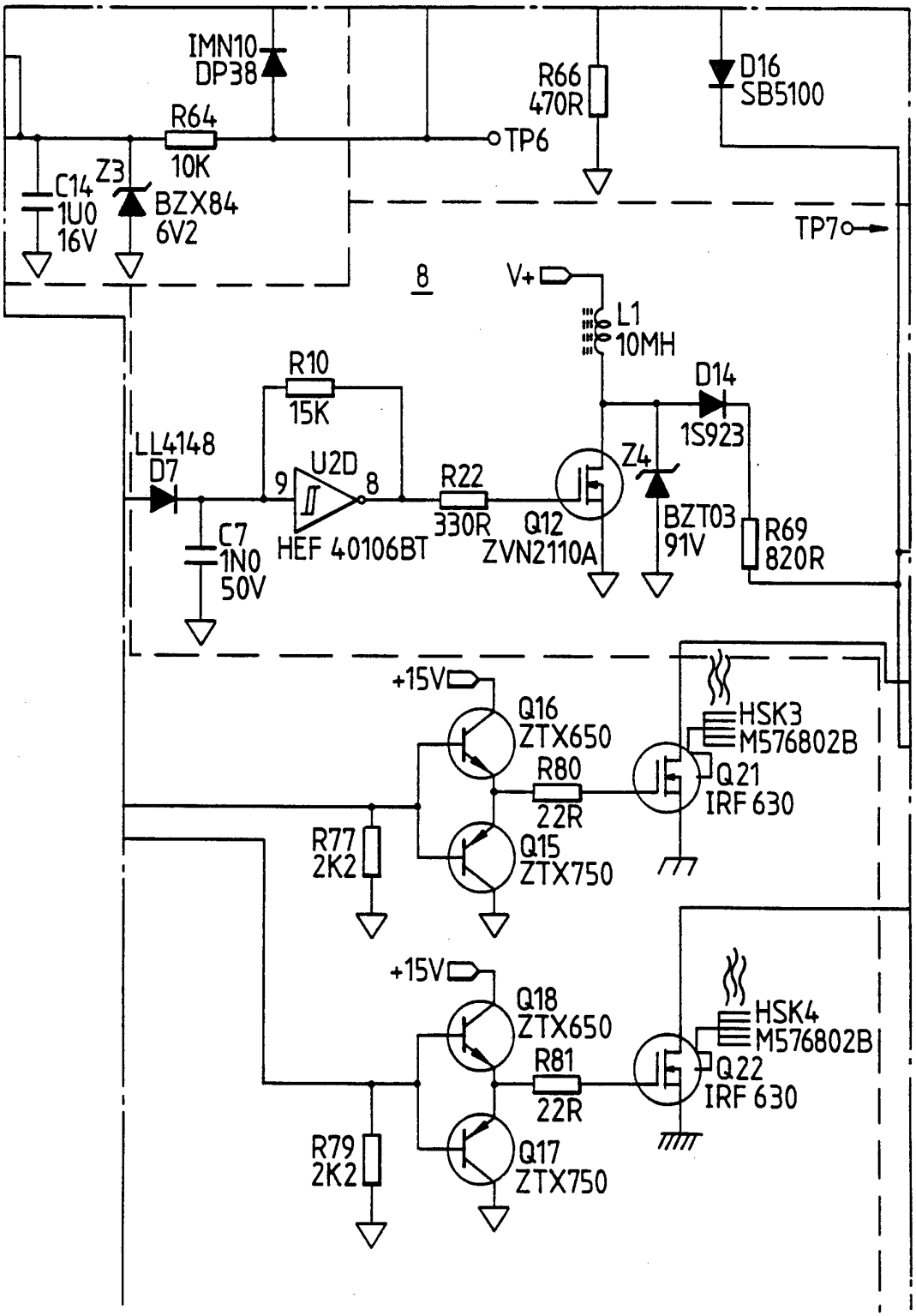
IMN10
DP38
R64
10K
C14
1U0
16V
Z3
BZX84
6V2
R66
470R
TP6
D16
SB5100
TP7
8
V+
L1
10MH
R10
15K
D14
1S923
LL4148
D7
U2D
9
8
HEF 40106BT
R22
330R
Q12
ZVN2110A
Z4
BZT03
91V
R69
820R
C7
1N0
50V
+15V
Q16
ZTX650
R80
22R
Q15
ZTX750
R77
2K2
HSK3
M576802B
Q21
IRF 630
+15V
Q18
ZTX650
R81
22R
Q17
ZTX750
R79
2K2
HSK4
M576802B
Q22
IRF 630

Fig. 3d.

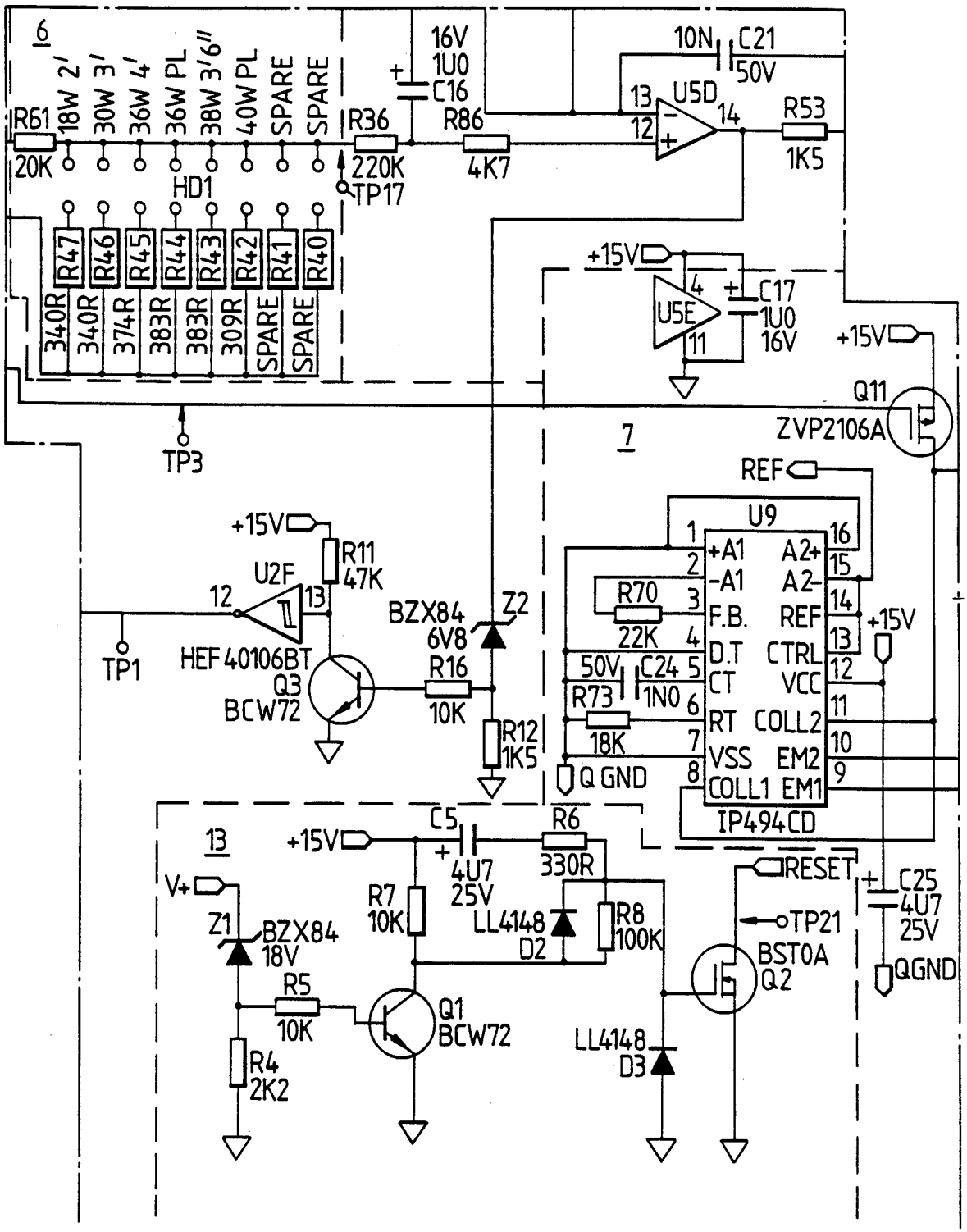
6
R61
20K
18W 2'
30W 3'
36W 4'
36W PL
38W 3'6"
40W PL
SPARE
SPARE
HD1
R47
R46
R45
R44
R43
R42
R41
R40
340R
340R
374R
383R
383R
309R
SPARE
SPARE
R36
220K
TP17
16V
1U0
C16
R86
4K7
10N
C21
50V
U5D
13
12
14
R53
1K5
+15V
U5E
4
11
C17
1U0
16V
+15V
Q11
ZVP2106A
TP3
7
REF
U9
1
2
3
4
5
6
7
8
+A1
-A1
F.B.
D.T
CT
RT
VSS
COLL1
A2+
A2-
REF
CTRL
VCC
COLL2
EM2
EM1
16
15
14
13
12
11
10
9
IP494CD
R70
22K
50V
C24
1N0
R73
18K
Q GND
+15V
+15V
R11
47K
U2F
12
13
TP1
HEF 40106BT
Q3
BCW72
BZX84
6V8
Z2
R16
10K
R12
1K5
13
+15V
C5
4U7
25V
R6
330R
V+
Z1
BZX84
18V
R7
10K
LL4148
D2
R8
100K
RESET
TP21
BST0A
Q2
C25
4U7
25V
QGND
R5
10K
R4
2K2
Q1
BCW72
LL4148
D3

Fig.3f.

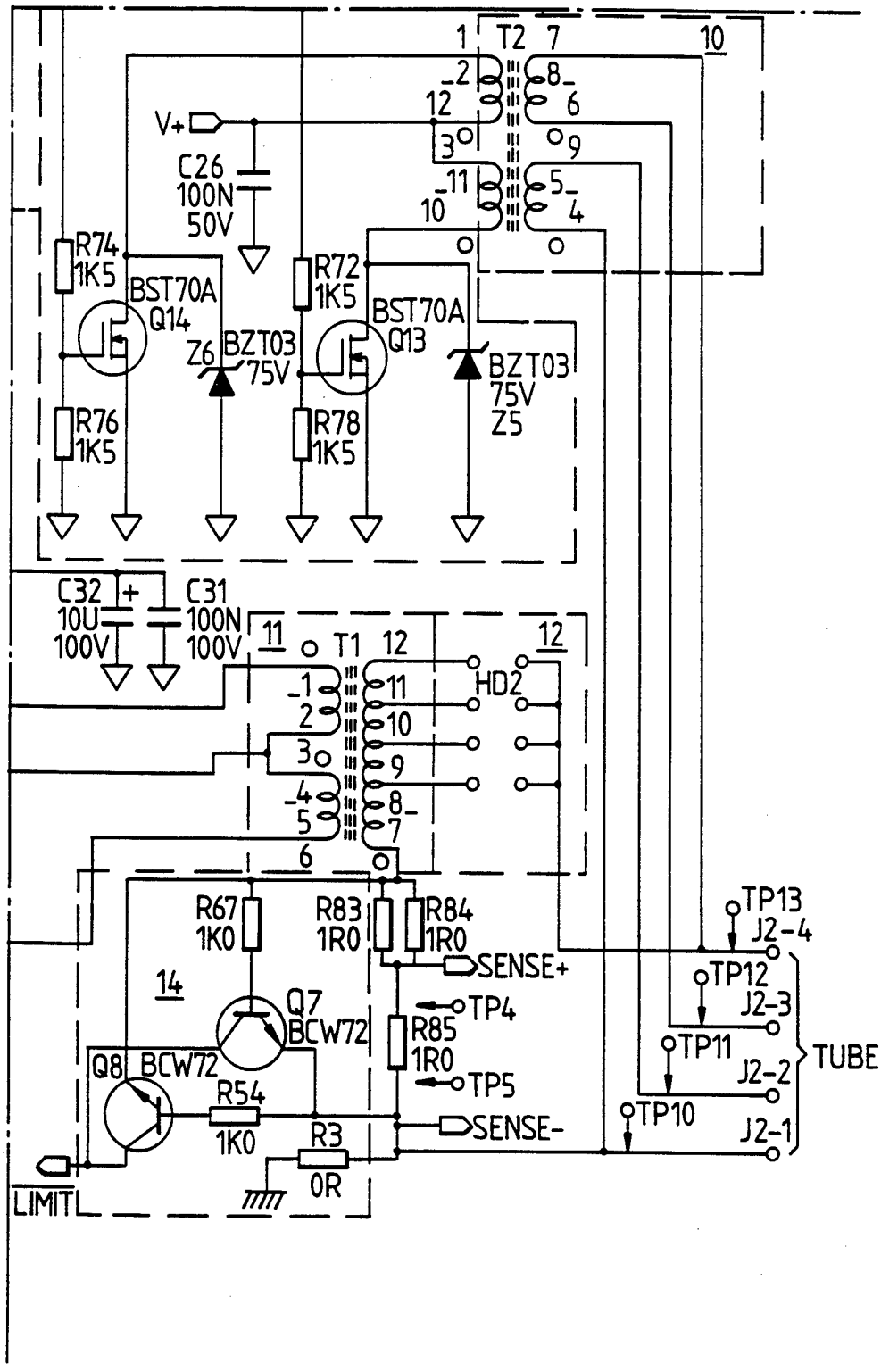
T2
T1
V+
C26
100N
50V
R74
1K5
BST70A
Q14
Z6 BZT03
75V
R72
1K5
BST70A
Q13
BZT03
75V
Z5
R76
1K5
R78
1K5
C32
10U
100V
C31
100N
100V
HD2
R67
1K0
R83
1R0
R84
1R0
SENSE+
Q7
BCW72
TP4
R85
1R0
Q8 BCW72
R54
1K0
TP5
SENSE-
R3
0R
LIMIT
TP13
J2-4
TP12
J2-3
TP11
J2-2
TP10
J2-1
TUBE

Fig.4.

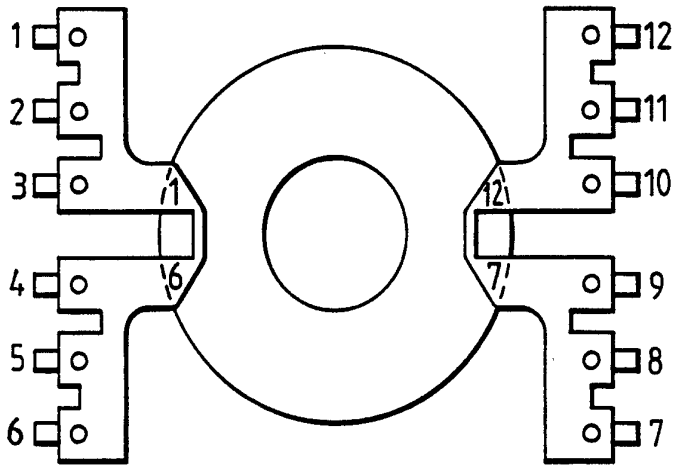

Fig.5.

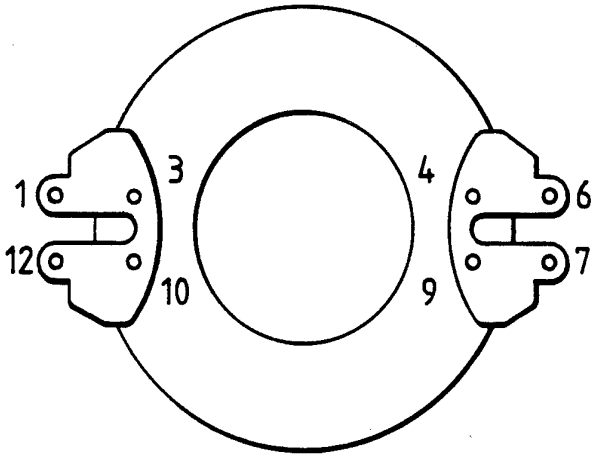

INTERNATIONAL SEARCH REPORT

Inte. ational application No.
PCT/GB 93/01618

A. CLASSIFICATION OF SUBJECT MATTER

IPC5: H05B 41/29, H05B 41/36
According to International Patent Classification (IPC) or to both national classification and IPC

B. FIELDS SEARCHED

Minimum documentation searched (classification system followed by classification symbols)

IPC5: H05B

Documentation searched other than minimum documentation to the extent that such documents are included in the fields searched

Electronic data base consulted during the international search (name of data base and, where practicable, search terms used)

C. DOCUMENTS CONSIDERED TO BE RELEVANT

Category*	Citation of document, with indication, where appropriate, of the relevant passages	Relevant to claim No.
A	EP, A2, 0429402 (MARELLI AUTRONICA S.P.A.), 29 May 1991 (29.05.91), abstract --	1-15
A	EP, A1, 0439861 (N.V. PHILIPS' GLOEILAMPENFABRIEKEN), 7 August 1991 (07.08.91), abstract --	1-15
A	US, A, 4385262 (CRAIG S. CAMBIER ET AL), 24 May 1983 (24.05.83), abstract --	1-15
A	US, A, 4723098 (CALVIN E. GRUBBS), 2 February 1988 (02.02.88), abstract --	1-15

[X] Further documents are listed in the continuation of Box C. [X] See patent family annex.

* Special categories of cited documents:
"A" document defining the general state of the art which is not considered to be of particular relevance
"E" erlier document but published on or after the international filing date
"L" document which may throw doubts on priority claim(s) or which is cited to establish the publication date of another citation or other special reason (as specified)
"O" document referring to an oral disclosure, use, exhibition or other means
"P" document published prior to the international filing date but later than the priority date claimed
"T" later document published after the international filing date or priority date and not in conflict with the application but cited to understand the principle or theory underlying the invention
"X" document of particular relevance: the claimed invention cannot be considered novel or cannot be considered to involve an inventive step when the document is taken alone
"Y" document of particular relevance: the claimed invention cannot be considered to involve an inventive step when the document is combined with one or more other such documents, such combination being obvious to a person skilled in the art
"&" document member of the same patent family

Date of the actual completion of the international search	Date of mailing of the international search report
9 December 1993	13. 12. 93

Name and mailing address of the International Searching Authority
European Patent Office, P.B. 5818 Patentlaan 2
NL-2280 HV Rijswijk
Tel. (+31-70) 340-2040, Tx. 31 651 epo nl,
Fax (+31-70) 340-3016

Authorized officer
Anders Axberger

INTERNATIONAL SEARCH REPORT

Int. ational application No.
PCT/GB 93/01618

C (Continuation). DOCUMENTS CONSIDERED TO BE RELEVANT

Category*	Citation of document, with indication, where appropriate, of the relevant passages	Relevant to claim No.
A	US, A, 4862040 (OLE K. NILSSEN), 29 August 1989 (29.08.89), abstract ---	1-15
A	US, A, 4958108 (JEFFREY A. JORGENSEN), 18 Sept 1990 (18.09.90), abstract -- ---	1-15

SA 77554

INTERNATIONAL SEARCH REPORT

Information on patent family members

16/10/93

International application No.
PCT/GB 93/01618

Patent document cited in search report	Publication date	Patent family member(s)	Publication date
EP-A2- 0429402	29/05/91	JP-A- 3147293	24/06/91
EP-A1- 0439861	07/08/91	JP-A- 4212296	03/08/92
		US-A- 5150014	22/09/92
		NL-A- 9000202	16/08/91
US-A- 4385262	24/05/83	JP-C- 1606803	13/06/91
		JP-B- 2031480	13/07/90
		JP-A- 58097297	09/06/83
US-A- 4723098	02/02/88	AU-B- 552569	05/06/86
		AU-A- 7724981	28/04/82
		CA-A- 1179430	11/12/84
		EP-A,B- 0067999	05/01/83
		US-A- 4477748	16/10/84
		US-A- 4658187	14/04/87
		WO-A- 8201276	15/04/82
		AU-B- 596079	26/04/90
		AU-A- 4841585	24/04/86
		EP-A- 0178852	23/04/86
		JP-A- 61096699	15/05/86
US-A- 4862040	29/08/89	NONE	
US-A- 4958108	18/09/90	NONE	