(12) STANDARD PATENT (11) Application No. **AU 2020200403 B2**
(19) AUSTRALIAN PATENT OFFICE

(54) Title
Case bracket and electric equipment

(51) International Patent Classification(s)
H02G 3/10 (2006.01) ***H05K 7/14*** (2006.01)
H05K 5/02 (2006.01)

(21) Application No: **2020200403** (22) Date of Filing: **2020.01.21**

(30) Priority Data

(31) Number	(32) Date	(33) Country
201910214112.X	**2019.03.20**	**CN**

(43) Publication Date: **2020.10.08**
(43) Publication Journal Date: **2020.10.08**
(44) Accepted Journal Date: **2021.08.05**

(71) Applicant(s)
Sungrow Power Supply Co., Ltd.

(72) Inventor(s)
Shen, Zhanliang;Huang, Zhifeng

(74) Agent / Attorney
FB Rice Pty Ltd, Level 23 44 Market Street, Sydney, NSW, 2000, AU

(56) Related Art
US 2018/0110346 A1
AU 2012101568 A4
CN 205960987 U
CN 205051594 U
CN 208074534 U
CN 208401798 U

2020200403 21 Jan 2020

ABSTRACT

A case bracket and electrical equipment is provided according to the present application. The case bracket includes a main body frame, a handle portion provided on the main body frame and a hanging device provided on the main body frame. In the case bracket according to the present application, the hanging device and the handle portion are both provided on the main body frame to achieve an integrated setting, thereby effectively improving the mounting efficiency of the case bracket, simplifying the number of parts and reducing costs.

2020200403 16 Jul 2021

CASE BRACKET AND ELECTRIC EQUIPMENT

FIELD

[0001] The present application relates to the technical field of mounting brackets, and in particular to a case bracket. The present application also relates to an electrical equipment having the case bracket

BACKGROUND

[0002] In the conventional technology, an electrical structure is usually mounted in a case body of a case, such as an inverter case. A handle is usually provided on a side wall of the case for facilitating staff carrying. A hanging device is usually provided on a rear wall of the case. The inverter is connected to a wall hanging plate through the hanging device, so as to achieve the hanging mounting of the inverter.

[0003] In such conventional technology, mounting locations may be provided on a side and a rear wall of the case, and a handle and a hanging device may be separately mounted by the staff.

[0004A] Any discussion of documents, acts, materials, devices, articles or the like which has been included in the present specification is not to be taken as an admission that any or all of these matters form part of the prior art base or were common general knowledge in the field relevant to the present disclosure as it existed before the priority date of each of the appended claims.

[0004B] Throughout this specification the word "comprise", or variations such as "comprises" or "comprising", will be understood to imply the inclusion of a stated element, integer or step, or group of elements, integers or steps, but not the exclusion of any other element, integer or step, or group of elements, integers or steps.

SUMMARY

[0005] A case bracket is provided by the present application for improving the mounting efficiency of the case bracket. A case having the case bracket is further provided by the present application.

[0006] Also disclosed herein is an electrical equipment, comprising a case body, wherein the electric equipment further comprises a case bracket fixedly connected to the case body and configured to allow the case body to be hung up. The case bracket includes a main

body frame, a handle portion provided on the main body frame, and a hanging device provided on the main body frame.

[0007] The main body frame includes a mounting portion for fixedly connecting to a case body. The main body frame further comprises two support legs fixedly connected to the mounting portion. The two support legs are arranged along the length direction of the mounting portion. Two hanging devices are provided. The two hanging devices are respectively mounted on sides, away from the mounting portion, of the two support legs.

[0008] The two hanging devices are detachably connected to the two support legs, and the two hanging devices are connected to the two support legs by threads.

[0009] The handle portion is an operation hole provided in the mounting portion.

[0010] Preferably, the operation hole is provided along a length direction of the mounting portion.

[0011] Preferably, the operation hole is an oblong hole.

[0012] According to the present disclosure, there is also a case in which the hanging device is a hanging protrusion or a hanging recess configured to allow the case body to be hung up.

[0013] According to the present disclosure, there is also a case in which the hanging device and the support leg are formed as an integral structure.

[0014] According to the present disclosure, there is also a case in which, an end of the hanging device facing away from the mounting portion is a support surface, and the support surface protrudes outward from a side of the case.

[0015] As mentioned above, the hanging devices are detachably connected to the two support legs.

[0016] Preferably, the main body frame further includes a reinforcing rib plate having two ends connected to the support leg and the mounting portion, respectively.

[0017] According to the present disclosure, an electrical equipment includes a case body and a case bracket, and the case bracket is fixedly connected to the case body and configured to achieve the hanging of the case body, and the case bracket is the case bracket according to any one of the above.

[0018] Preferably, the electrical equipment is an inverter or a combiner box.

[0019] Preferably, two case brackets are provided, and the two case brackets are

202020403 05 Feb 2021

symmetrically arranged on opposite sides of the case body.

[0020] In the above technical solution, the case bracket according to the present application includes a main body frame, a handle portion provided on the main body frame, and a hanging device provided on the main body frame.

[0021] From the above description, it can be known that, in the case bracket according to the present application, the hanging device and the handle portion are both provided on the main body frame to achieve an integrated setting, thereby effectively improving the mounting efficiency of the case bracket.

BRIEF DESCRIPTION OF THE DRAWINGS

[0022] For clearer illustration of the technical solutions according to embodiments of the present application or conventional techniques, hereinafter are briefly described the drawings to be applied in embodiments of the present application or conventional techniques. Apparently, the drawings in the following descriptions are only some embodiments of the present application, and other drawings may be obtained by those skilled in the art based on the provided drawings without creative efforts.

[0023] Figure 1 is a schematic view showing the structure of a case bracket according to a first embodiment of the present application;

[0024] Figure 2 is a schematic view showing the structure of the case bracket shown in Figure 1 when the case bracket supports the case;

[0025] Figure 3 is a schematic view showing the structure of the case bracket shown in Figure 2 in a supporting state;

[0026] Figure 4 is a structural position view of the case shown in Figure 2 and a wall hanging plate;

[0027] Figure 5 is a structural position view of the case when the case as shown in Figure 2 is vertically mounted;

[0028] Figure 6 is a structural position view of the case when the case as shown in Figure 2 is horizontally carried;

202020040 3 05 Feb 2021

[0029] Figure 7 is a three-dimensional structure view of the case shown in Figure 2;

[0030] Figure 8 is a three-dimensional structural view of a case bracket according to a second embodiment of the present application;

[0031] Figure 9 is a three-dimensional structural view of a case bracket according to a third embodiment of the present application; and

[0032] Figure 10 is a structural position view of the case shown in Figure 8 and the wall hanging plate.

[0033] Reference numerals in Figures 1 to 10.

1	case body,	2	main body frame,
3	operation hole,	4	reinforcing rib plate,
5	hanging device,	6	mounting portion,
7	hanging recess,	8	supporting plate,
9	support leg,	10	wall hanging plate,
11	limiting hole,	12	case body bracket,
13	case bracket.		

DETAILED DESCRIPTION

[0034] A case bracket is provided by the present application for improving the mounting efficiency of the case bracket. A case having the case bracket is further provided by the present application.

[0035] In order to make those skilled in the art to better understand the solution of the present application, the present application will be further described in detail below in conjunction with the drawings and specific embodiments.

[0036] Please refer to Figures 1 to 10.

[0037] In an embodiment, a case bracket includes a main body frame 2, a handle portion provided on the main body frame 2, and a hanging device 5 provided on the main body frame 2.

202020403 05 Feb 2021

[0038] In a preferred embodiment, the hanging device 5 may be a conventional hook. The hanging device 5 may be a hanging protrusion or a hanging recess 7 that allows the case body to be hung up. The case body is connected to the wall hanging plate 10 through the hanging recess 7 to achieve the hanging of the case. Specifically, the wall hanging plate 10 is provided with a limiting hole 11 for limiting the hanging device 5. The structure of the hanging device 5 may be adaptively designed according to the structure of the wall hanging plate 10, which is not limited to two embodiments. The wall hanging function may be achieved by a single case bracket 13, or two case brackets 13 on opposite sides of the case body 1 together with other parts.

[0039] In a preferred embodiment, the handle portion may be one or more hanging ring mounted on the main body frame 2, which depends on actual requirements. The handle portion may be handled by human hands for carrying and mounting the case.

[0040] In a preferred embodiment, the main body frame 2 includes a mounting portion 6 for fixedly connecting with the case body 1. Specifically, the mounting portion 6 may be detachably connected to the case body 1. In an actual application, when the case bracket 13 may be integrally formed with the casing of the case body 1, the mounting portion 6 is a part of the casing of the case body 1, that is, the mounting portion 6 is not required to be individually provided.

[0041] The handle portion is a handle protrusion protruding outward from the mounting portion 6, and the handle protrusion and the mounting portion 6 are formed as an integral structure. Specifically, during processing, the integral structure of the handle protrusion and the mounting portion 6 may be formed by extrusion.

[0042] In order to improve the processing efficiency of the case bracket 13, preferably, the handle portion is an operation hole 3 provided in the mounting portion 6, and specifically, the number of the operation hole 3 may be one, two or more. Considering that an operator usually uses both hands when carrying the case, as shown in Figure 6, preferably, the number of the operation holes 3 are two. In order to facilitate arranging the operation holes 3 and reducing the overall area, the operation holes 3 are preferably provided along a length direction of the mounting portion 6.

[0043] As shown in Figures 1 to 3, in order to avoid the situations of the local stress

2020200403 05 Feb 2021

concentration of the operation hole 3 and scratching the operator, the operation hole 3 is preferably an oblong hole.

[0044] Specifically, when the case bracket 13 is mounted, the case body 1 is vertically placed and supported by the case body bracket 12 of the case body 1, and then the case bracket 13 is mounted on the case body 1 through a locking member. Specifically, the locking member is preferably a threaded fastener.

[0045] From the above description, it can be known that, in the case bracket according to the specific embodiment of the present application, the hanging device 5 and the handle portion are both provided on the main body frame 2 to achieve an integrated setting, and the main body frame 2 is directly mounted with the case body, that is, achieving the mounting of the handle portion and the hanging device 5 with the case, thereby the mounting efficiency of the case bracket 13 is effectively improved.

[0046] Further, the main body frame 2 further includes two support legs 9 fixedly connected to the mounting portion 6. The two support legs 9 are arranged along the length direction of the mounting portion 6. Two hanging devices 5 are provided and are respectively mounted on the two support leg 9. With the setting of the support legs 9, it is convenient for the hanging device 5 to better achieve the hanging, the overall structural layout is more reasonable, and interference between operations is avoided.

[0047] In order to improve the processing efficiency of the case bracket 13 and reduce the labor intensity of the staff in assembling the case bracket 13, the hanging device 5 and the support leg 9 are preferably formed as an integral structure.

[0048] Preferably, an end of the hanging device 5 facing away from the mounting portion 6 is a support surface, and the support surface protrudes outwards from a side of the case body. When the case body is laid flat, as shown in Figure 7, the case body 1 may be supported by the end of the hanging device 5. Specifically, in order to prolong the service life of the case bracket 13, a support plate 8 is preferably provided on the support surface.

[0049] In another embodiment, as shown in Figures 8 to 10, for example, the second case body bracket shown in Figure 8 and the third case body bracket shown in Figure 9, the hanging device 5 is detachably connected to the support leg 9. Specifically, in order to facilitate disassembly of the hanging device 5, the hanging device 5 and the support leg 9 are

2020200403 05 Feb 2021

separated into two parts. Preferably, the hanging device 5 is connected to the support leg 9 by threads.

[0050] In order to improve the use stability of the case bracket 13 and prolong the service life of the case bracket 13, preferably, the main body frame 2 further includes a reinforcing rib plate 4 having two ends connected to the support legs 9 and the mounting portion 6, respectively. The shape and number of the reinforcing rib plates 4 are determined according to the actual requirements, which are not specifically limited in this application.

[0051] Preferably, the main body frame 2 is formed as an integral structure. More preferably, the case bracket 13 is formed as an integral structure, thereby reducing the number of the parts of the case bracket 13, and the handle portion is simply the operation hole 3, which avoids the situation of individually providing a handle structure, reduces costs, and reduces assembly difficulty.

[0052] The case bracket 13 according to the present application integrates multiple functions such as carrying, wall hanging and supporting, which is easy to operate, convenient to widespread use, simplifies the number of the parts and reduces costs.

[0053] Electrical equipment according to the present application includes a case body 1 and a case bracket 13 which is fixedly connected to the case body 1 and used to achieve the hanging of the case body 1, and the case bracket 13 is any one of the above case brackets 13. The specific structure and technical effects of the case bracket 13 have been described above. The case body according to the present application includes the above case bracket 13 and also has the above technical effects.

[0054] Specifically, the electrical equipment may be an inverter or a combiner box. Of course, in specific applications, the case bracket 13 may also be used for hanging other electrical devices.

[0055] In order to ensure the stability of the hanging of the case, preferably, two case brackets 13 are provided, and the two case brackets 13 are symmetrically arranged on opposite sides of the case body 1. More preferably, as shown in Figure 10, after hanging, the length direction of the mounting portion 6 is arranged perpendicular to the horizontal direction.

2020200403 05 Feb 2021

[0056] The above embodiments are described in a progressive manner. Each of the embodiments is mainly focused on describing its differences from other embodiments, and references may be made among these embodiments with respect to the same or similar sections among these embodiments.

[0057] Based on the above description of the disclosed embodiments, the person skilled in the art can carry out or use the present application. It is obvious for the person skilled in the art to make many modifications to these embodiments. The general principle defined herein may be applied to other embodiments without departing from the spirit or scope of the present application. Therefore, the present application is not limited to the embodiments illustrated herein, but should be defined by the broadest scope consistent with the principle and novel features disclosed herein.

2020200403 16 Jul 2021

THE CLAIMS DEFINING THE INVENTION ARE AS FOLLOWS:-

1. An electrical equipment, comprising a case body, wherein the electric equipment further comprises a case bracket fixedly connected to the case body and configured to allow the case body to be hung up;

wherein the case bracket comprises: a main body frame, a handle portion provided on the main body frame, and a hanging device provided on the main body frame;

wherein the main body frame comprises a mounting portion for fixedly connecting to a case body;

wherein the main body frame further comprises two support legs fixedly connected to the mounting portion;

wherein the two support legs are arranged along the length direction of the mounting portion, two hanging devices are provided, the two hanging device are respectively mounted on sides, away from the mounting portion, of the two support legs;

wherein the handle portion is an operation hole provided in the mounting portion; and

wherein the two hanging devices are detachably connected to the two support legs, and the two hanging devices are connected to the two support legs by threads.

2. The electrical equipment according to claim 1, wherein the operation hole is provided along a length direction of the mounting portion.

3. The electrical equipment according to claim 1, wherein the operation hole is an oblong hole.

4. The electrical equipment according to any one of claims 1 to 3, wherein the main body frame further comprises a reinforcing rib plate having two ends connected to the support leg and the mounting portion, respectively.

5. The electrical equipment according to claim 1, wherein the electrical equipment is an inverter or a combiner box.

6. The electrical equipment according to claim 1, wherein two case brackets are provided, and the two case brackets are symmetrically arranged on opposite sides of the case body.

2020200403 21 Jan 2020

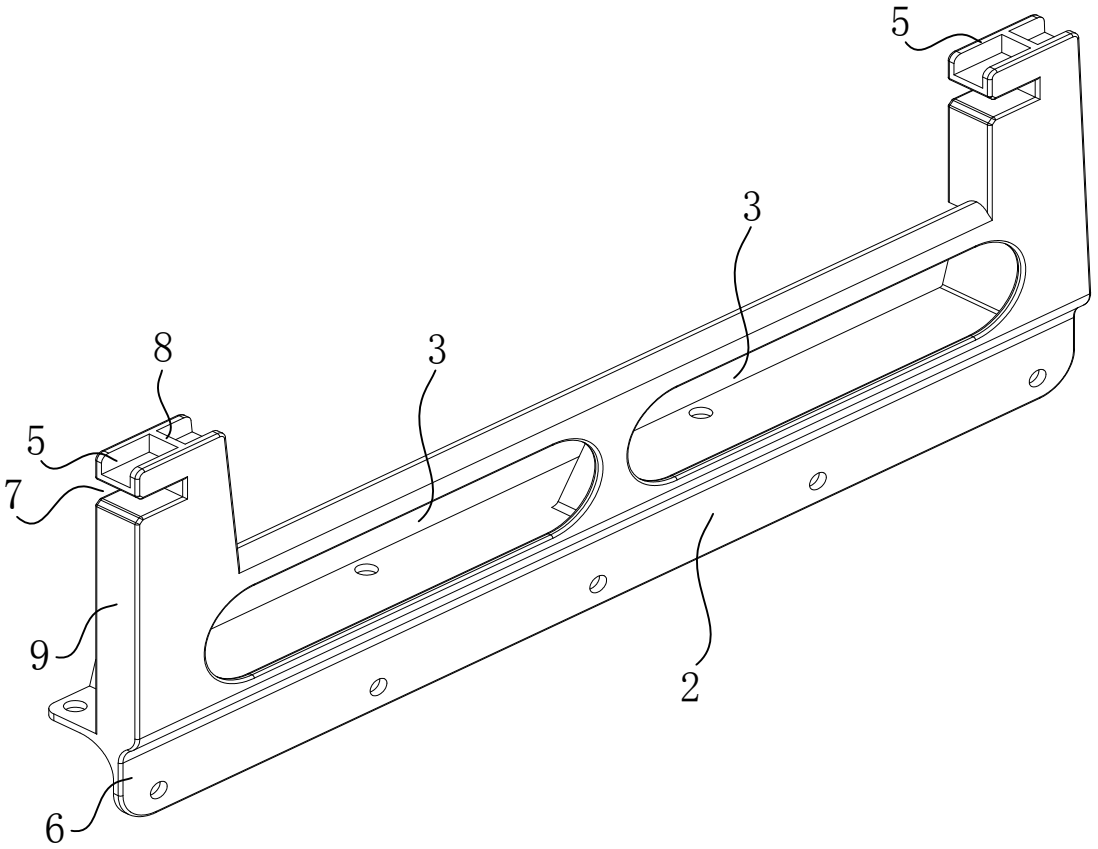

Figure 1

2020200403 21 Jan 2020

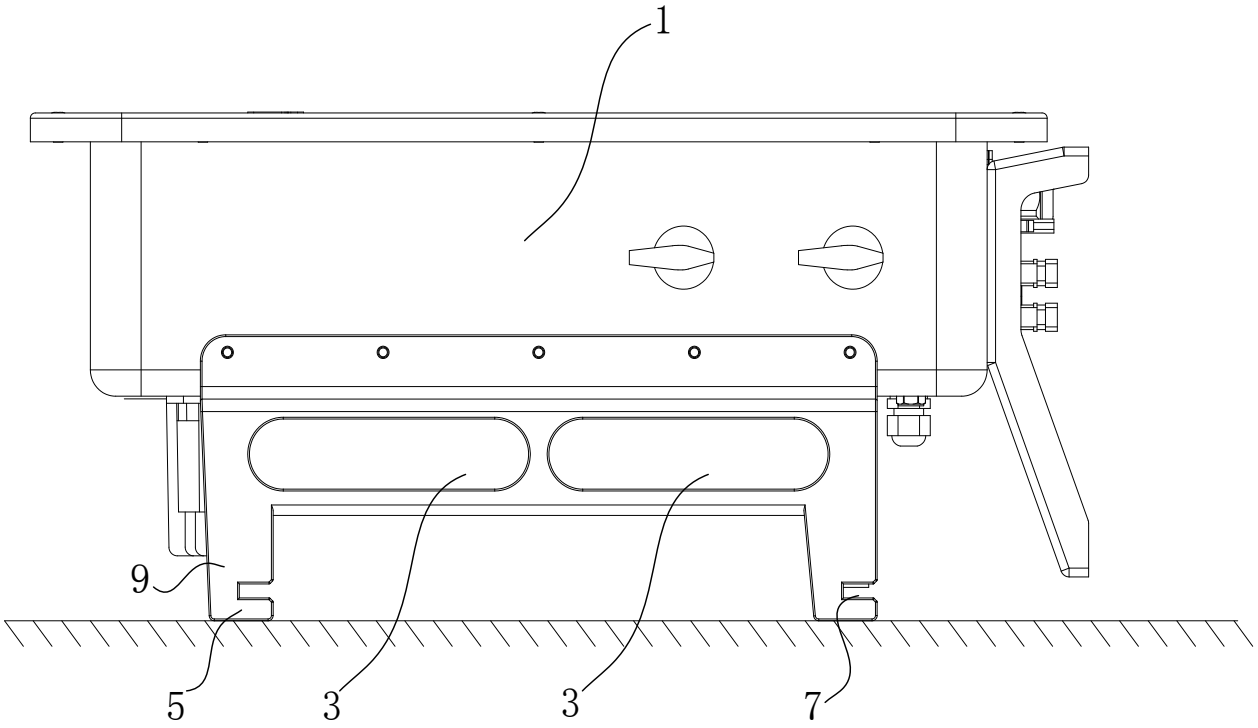

Figure 2

2020200403 21 Jan 2020

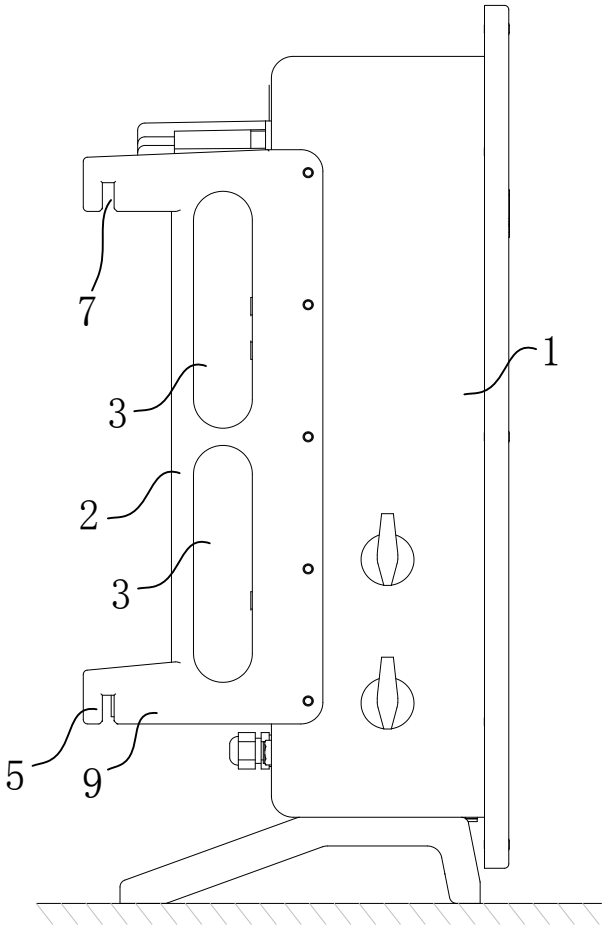

Figure 3

2020200403 21 Jan 2020

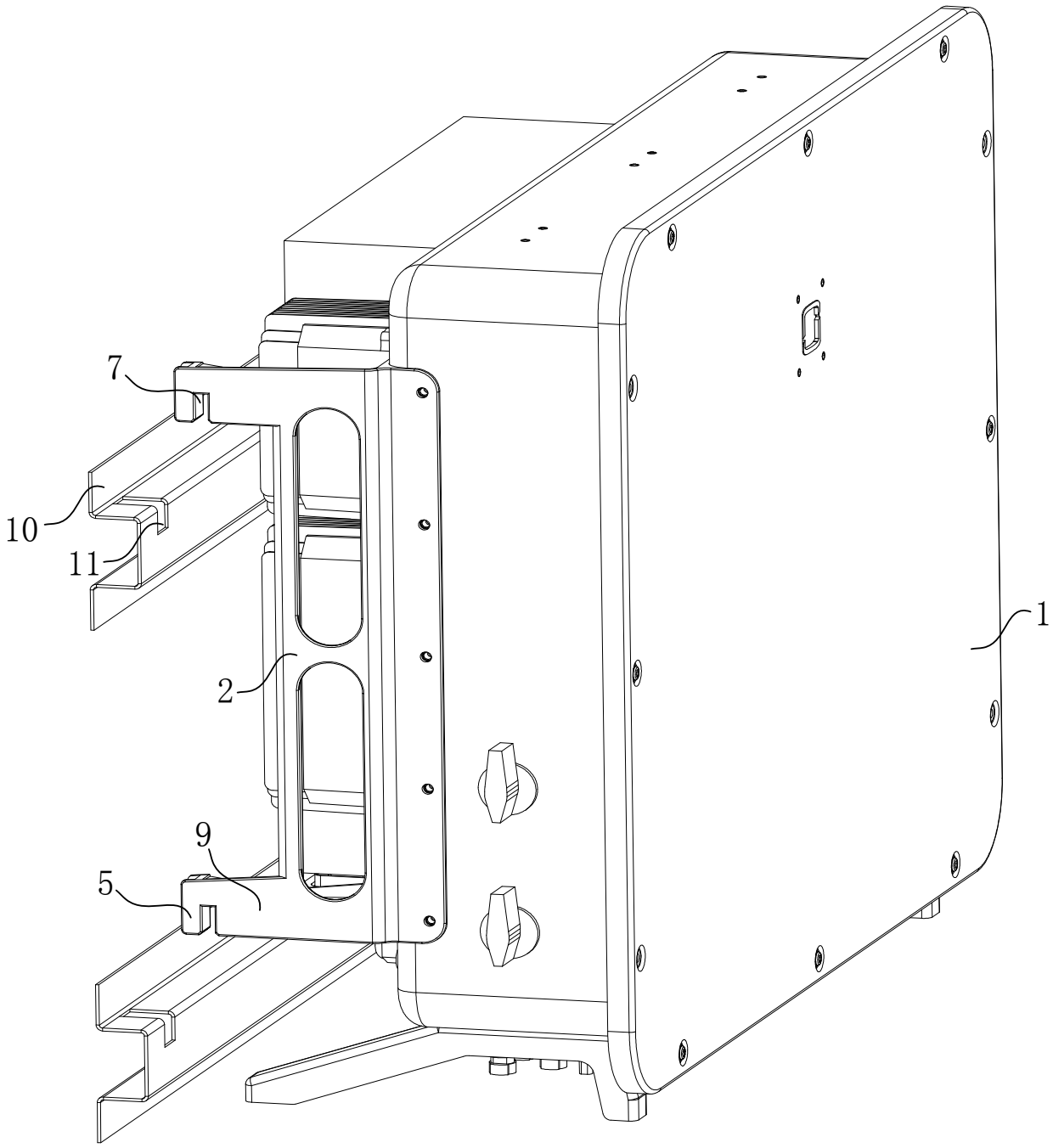

Figure 4

2020200403 21 Jan 2020

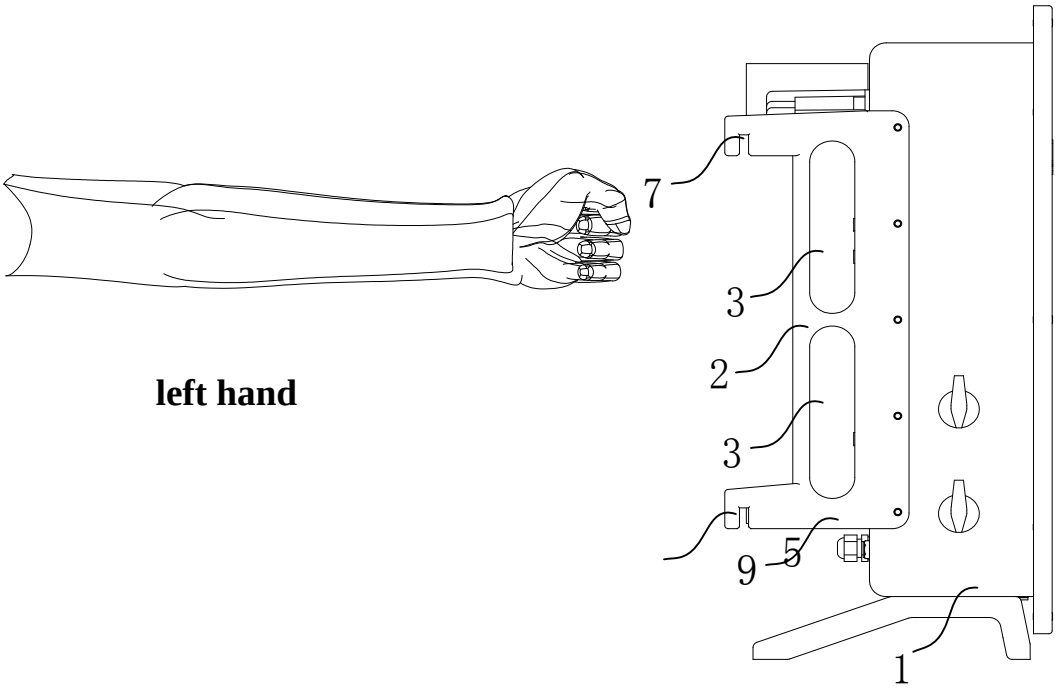

left hand

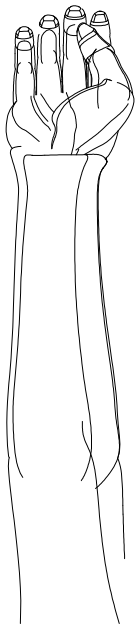

right hand

Figure 5

2020200403 21 Jan 2020

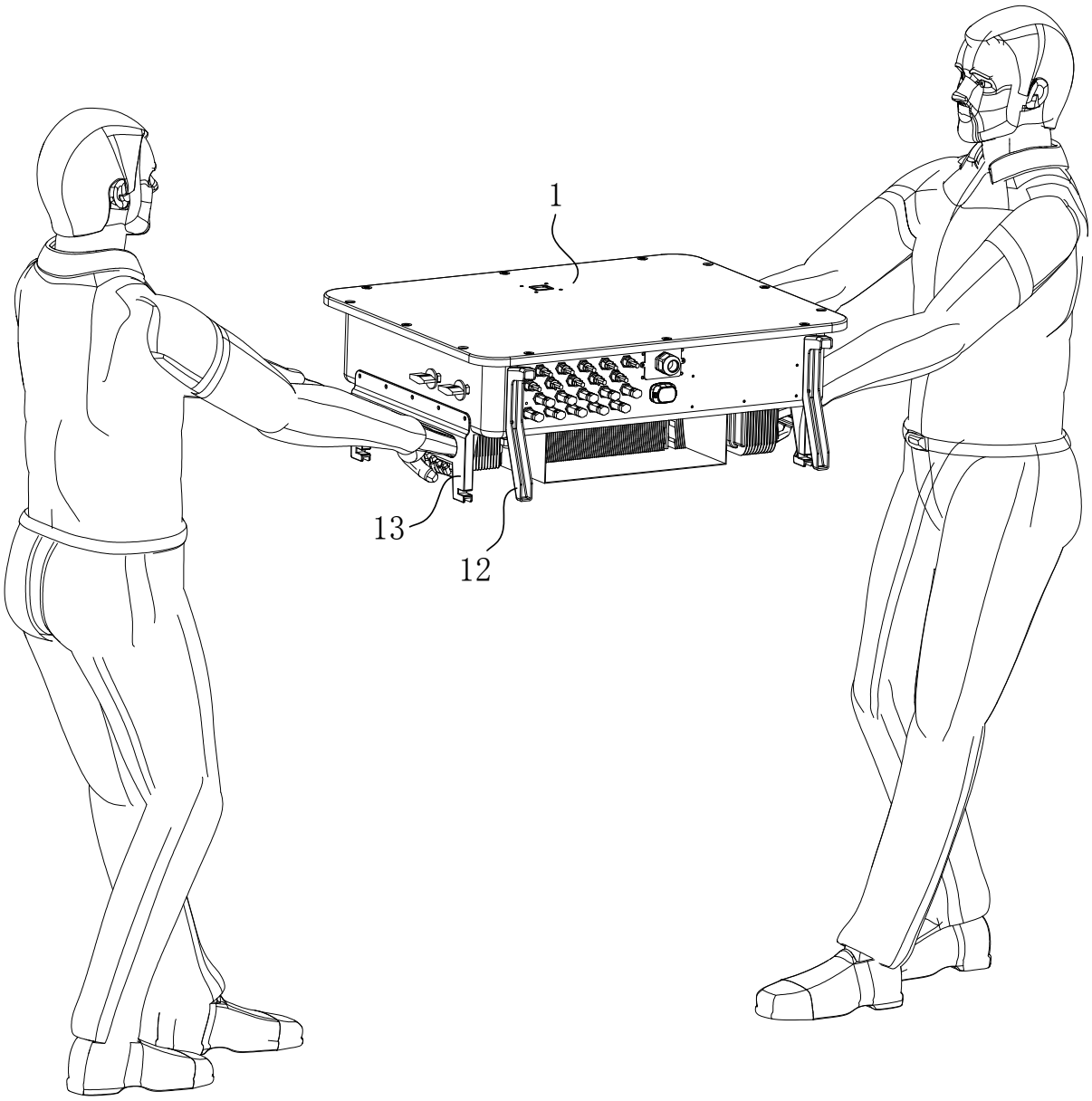

Figure 6

2020200403 21 Jan 2020

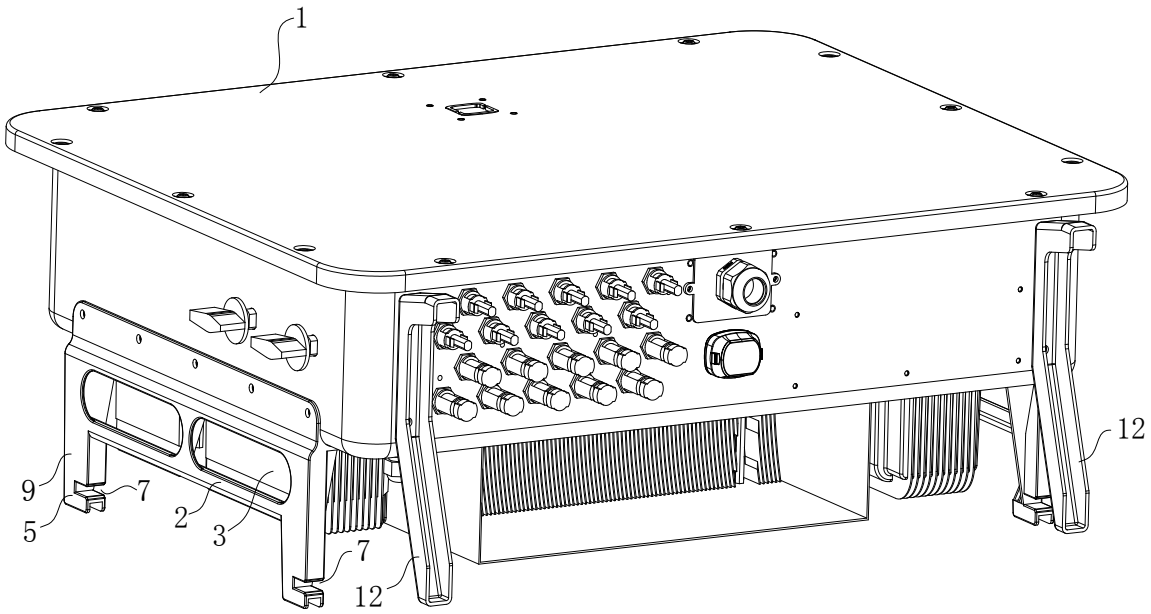

Figure 7

2020200403 21 Jan 2020

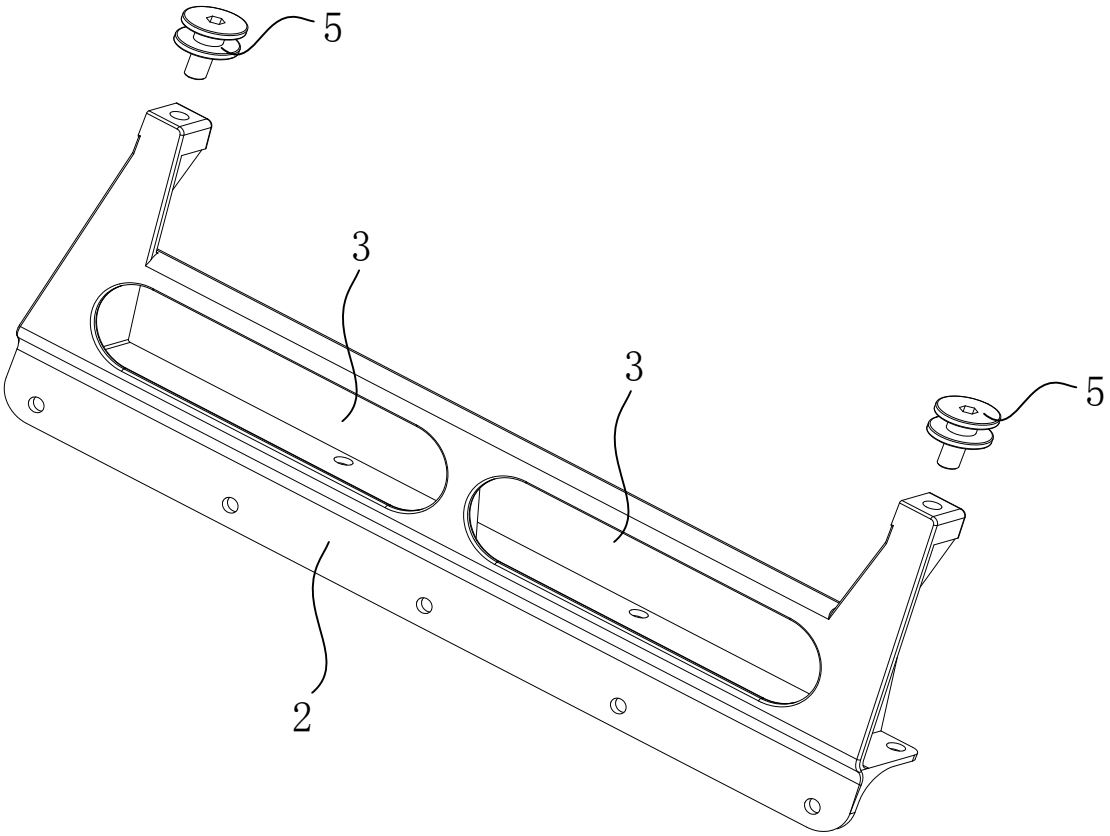

Figure 8

2020200403 21 Jan 2020

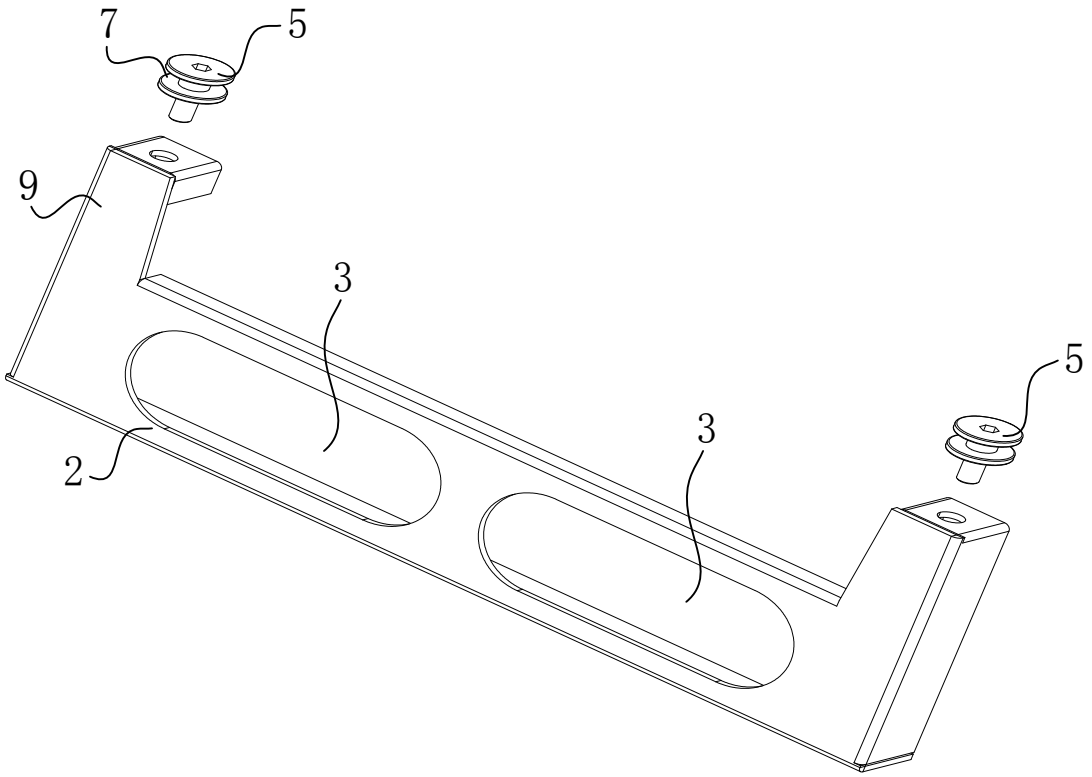

Figure 9

2020200403 21 Jan 2020

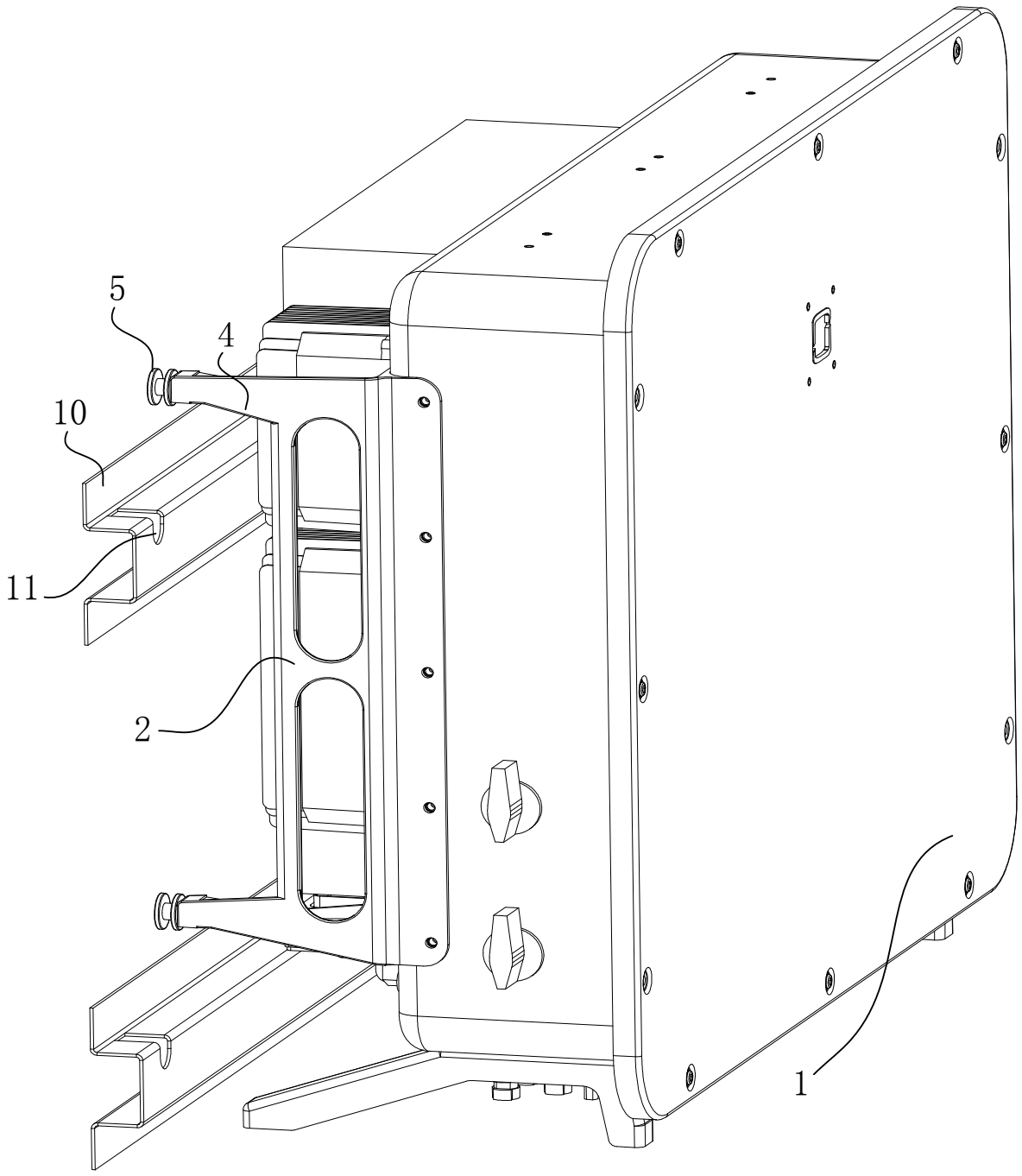

Figure 10