Jan. 5, 1965 E. B. CHILDS 3,164,012

METHOD AND APPARATUS FOR TESTING THE SPRAY PATTERN OF A SPRAY NOZZLE

Filed Aug. 14, 1961

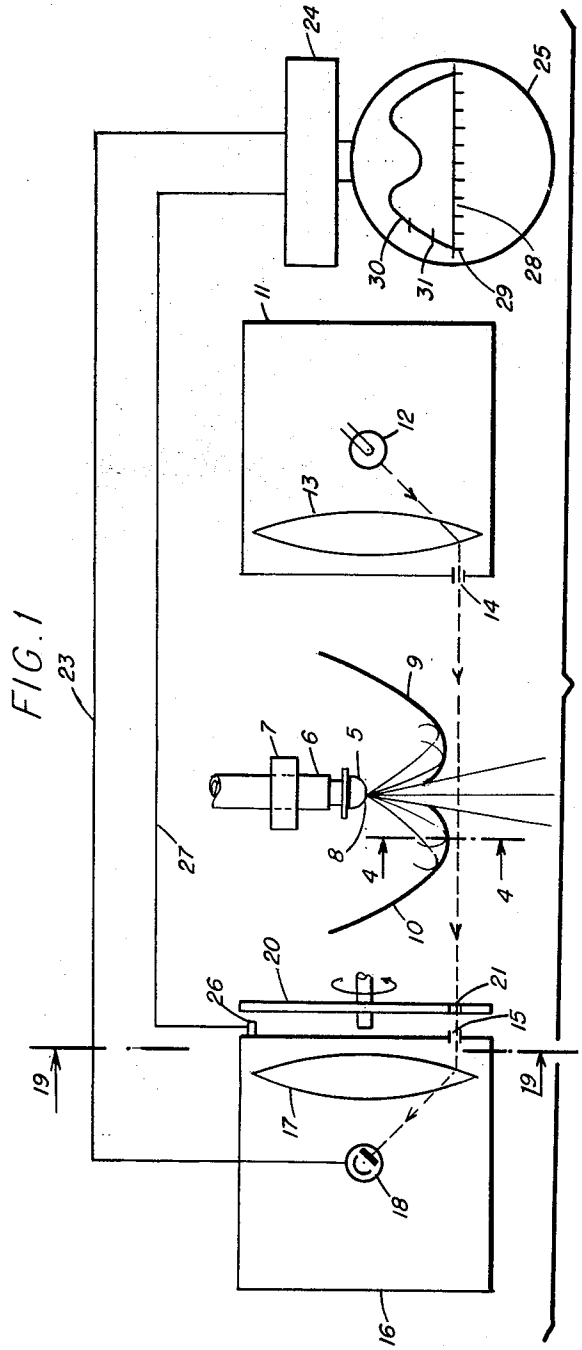

FIG. 1

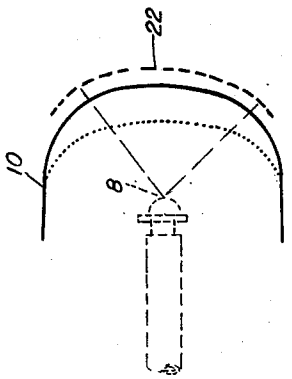

FIG. 4

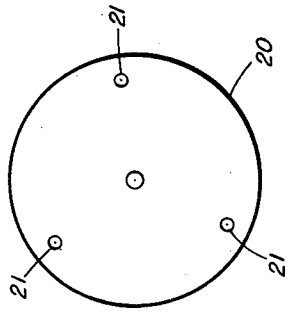

FIG. 3

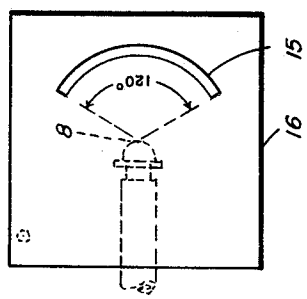

FIG. 2

INVENTOR.

ELBERT BARTH CHILDS

BY

Myron J. Buckhart

United States Patent Office 3,164,012 Patented Jan. 5, 1965

3,164,012

METHOD AND APPARATUS FOR TESTING THE SPRAY PATTERN OF A SPRAY NOZZLE

Elbert Barth Childs, Hastings on Hudson, N.Y., assignor to Socony Mobil Oil Company, Inc., a corporation of New York

Filed Aug. 14, 1961, Ser. No. 131,333
3 Claims. (Cl. 73—119)

This invention has to do with the examination of new or of used nozzles utilized in the atomization of fuel oils, and particularly with such nozzles as are utilized in domestic heating furnaces and similar installations.

The invention is applicable, of course, to a quite general class of nozzles, including not only the pressure-atomizing nozzles of the domestic furnace burner, but also air atomizing nozzles for similar use, pressure atomizing nozzles for use in Diesel-type engines, and with suitable modifications, for the examination of the pattern of any operation of liquid spraying, including such operations as the atomization of heavy fuel oils, the spraying of paint, and the like.

For the purposes of this specification, discussion will be limited to the pressure atomizing nozzle for domestic furnace burners, but only for simplification, and without intention of limiting thereto.

Imperfections in the minute bore of a nozzle, dirt in the bore, wear of the bore, machining burrs or scratches at entrance or exit of the bore, all may give rise to imperfect spray patterns. Over and beyond this, spray patterns usually must have specific characteristics for different types of burners. In a so-called "gun-type" burner, fitted with a combusion head, where the tip of the nozzle is within the air-tube, the combustion air is relatively concentrated in an annular flow, and the proper spray for this situation is one where there is more oil near the outer edges of the spray pattern than toward the center. In other types of gun type burners, the air flow is rather uniform, and the spray pattern should be more uniform.

The object of this invention is to provide a competent and efficient method and instrument for the examination of such spray patterns.

A further object is the provision of such an instrument which is capable of examination of the efficiency of any operation of spraying a liquid.

Another object is the provision of such an instrument which may be highly portable. Other objects will hereinafter appear.

The spray pattern tester of this invention may be understood by consideration of the drawings which are made a part of this application.

In these drawings,

FIGURE 1 is a highly diagrammatic showing of the entire insturment,

FIGURE 2 shows a detail in diagram of one light box,

FIGURE 3 similarly shows the scanning disc, and

FIGURE 4 similarly shows the spray shield.

In FIGURE 1, 5 is a spray nozzle undergoing test, mounted in feed pipe 6 which is so positioned by support 7 that the orifice of the nozzle is located at point 8. The support 7 is so designed that the nozzle may be readily rotated about its longitudnial axis so that the spray pattern in any position may be examined. The spray of the nozzle is "sliced" into a vertical segment by two spray shields 9 and 10, which permit passage of only a predetermined width of spray, symmetrical about the vertical plane passing through point 8.

Upon one side of this assembly is a light box 11 containing a light source (preferably a point source), 12, and a lens means 13. The side of light box 11 which faces the nozzle has in it a slot, 14 (explained in detail below), through which a beam of light passes in front of and

through the nozzle spray, to pass through a similar slot 15 into light box 16, and thence through lens means 17 to fall on photo sensitive cell 18.

Passing to FIGURE 2, we have a view, taken at plane 19—19 of the wall of light box 16 which faces the nozzle 5. The nozzle-facing wall of light box 11 is similar. The slot 15 is found to be in the form of an arc, whose center corresponds to the point 8 at which the orifice of the nozzle is located. The length of the slot 15, along the arc, is sufficient to cover the nozzle type being examined. Usually 120° will be sufficient.

Now, with light source 12, slot 14, slot 15 and photocell 18 all in exact alignment corresponding to point 8, we have an arcuate beam of light passing through the nozzle spray, as shown in FIGURE 1. To scan this beam, there is used a scanning wheel or disc 20, driven by a constant speed motor (not shown), and equipped with one or more openings 21. (See FIGURE 3.) This scanning disc 20 is so mounted and sized that its axis is on the line drawn through point 8, light source 12, and photocell 13, and the opening 21 passes along the arc of slots 14 and 15.

Turning to FIGURE 4, it is noted that spray shield 10 is also arcuately formed about this line passing through point 8, in an arc of less radius than the arc of slots 14 and 15, indicated by a dashed line 22. Spray shield 9 is of similar shape and the two may be joined, if desired, at top and bottom to form a hood around nozzle 5.

Now as the opening 21 in disc 20 scans the vertical "slice" of the spray, the intensity of light falling on photocell 18 will vary with the density of the spray "slice" from point to point along the arc of slots 14 and 15. The radius of this arc is dependent upon the type of nozzle to be examined, but for the usual nozzle used in domestic furnace burners should be of the order of 2 inches. The scanning of this spray "slice" thus gives rise to a signal proportional to the density of the spray. This signal may be conducted, in known manner, by connection 23 to an oscilloscope control assembly of known type, 24 for display upon the screen of an oscilloscope 25.

For synchronizing, a magnetic pickup 26 is mounted adjacent disc 20 to observe the passage of some selected point on that disc, and the impulse generated thereby is passed through connection 27 to oscilloscope control assembly 24, and used there for synchronizing the oscilloscope display in known manner.

Upon the face of the oscilloscope 25 there is shown a trace such as might be secured from a nozzle spray which is more concentrated at the periphery than in the center. If desired, a base line 28 may be drawn with "pips" 29 to indicate degrees of arc, and on spray density trace 30, similar "pips" 31 may be indicated for analytical purposes.

Other means of calibrating the pattern on the oscilloscope screen may be used, and any means of making a permanent record of the oscilloscope pattern, such as photographing the screen, may be used.

Not only is the shape of the pattern shown upon the screen useful, but also its behaviour. Some nozzles will be found to operate in an irregular manner, giving rise to variations in the shape of the pattern, or instantaneous variations in density (height) caused by droplets. In fact, some manifestations such as these may extend beyond the condition of the burner to the condition of the liquid itself, and much useful information concerning the entire spraying system may be gained from the use of this instrument.

I claim:

1. An instrument for examining the pattern of the spray formed by a nozzle for the spraying of a liquid comprising: means to mount said nozzle with its spray-forming orifice at a preselected position, means to segregate for

examination a central portion of said spray restricted in one dimension but extending throughout the whole of the spray pattern in the direction normal to the restricted dimension, light beam means to pass transversely through the spray at points in a path disposed along its unrestricted dimension, and means to sense variations in the intensity of light transmitted through said spray at said points as a measure of the density of said spray at said points.

2. An instrument for examining the pattern of the spray formed by a nozzle for the spraying of a liquid comprising: means to mount said nozzle with its orifice at a preselected position, shield means spaced away and forwardly from the orifice position, said shield means being shaped to permit passage of only a horizontally restricted vertical central portion of the nozzle spray, means to pass a beam of light transversely through said spray portion at a point beyond the shield, means to observe variations in light intensity caused by variations in spray density, and means to successively scan the spray portion through its vertical extent with said light beam.

3. A method for examination of the spray pattern formed by a nozzle for the spraying of a liquid comprising: establishing a spray of liquid from said nozzle, selecting for examination a section of said spray restricted in one dimension while rejecting the remainder, successively measuring the relative density of the spray at points distributed across its unrestricted dimension by passing a beam of light through such points and measuring variations in the intensity of the transmitted beam of light.

References Cited in the file of this patent

UNITED STATES PATENTS

2,629,255	Hartridge	Feb. 24, 1953
2,791,901	Rich	May 14, 1957

FOREIGN PATENTS

944,462	Germany	June 14, 1956