(No Model.)

G. E. DAVIS.

LUBRICATOR.

No. 590,611. Patented Sept. 28, 1897.

Fig. 1.

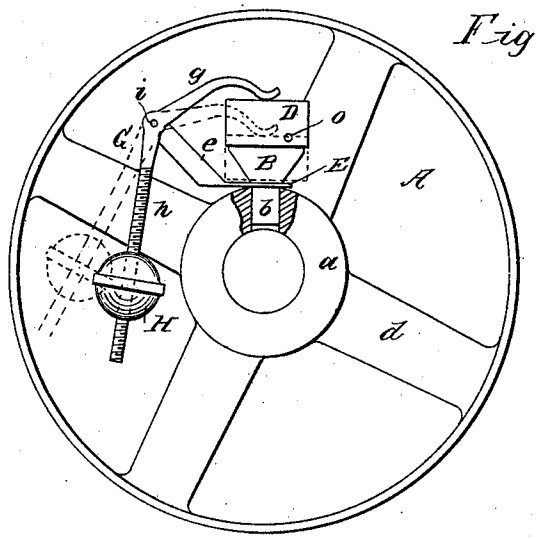

Fig. 3.

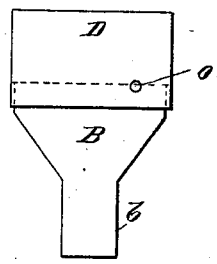

Fig 2

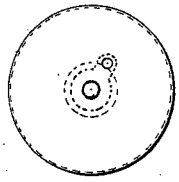

Fig. 4.

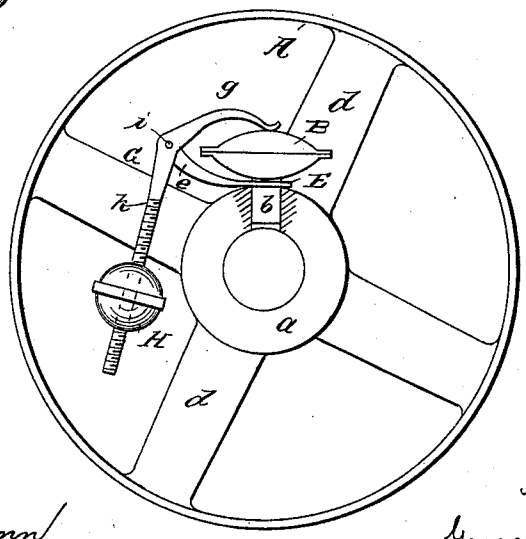

Attest.
F. A. Lehmann
Geo. H. Snyder

Inventor.
George E. Davis
by
M. M. Cady
Atty.

THE NORRIS PETERS CO., PHOTO-LITHO., WASHINGTON, D. C.

UNITED STATES PATENT OFFICE.

GEORGE E. DAVIS, OF DUBUQUE, IOWA, ASSIGNOR OF TWELVE TWENTY-FIFTHS TO L. L. LIGHTCAP, OF SAME PLACE.

LUBRICATOR.

SPECIFICATION forming part of Letters Patent No. 590,611, dated September 28, 1897.

Application filed November 9, 1896. Serial No. 611,524. (No model.)

To all whom it may concern:

Be it known that I, GEORGE E. DAVIS, a citizen of the United States, residing in the city and county of Dubuque and State of Iowa, have invented certain new and useful Improvements in Lubricators; and I do hereby declare the following to be a full, clear, and exact description of the invention, such as will enable others skilled in the art to which it appertains to make and use the same.

My invention has relation to lubricating devices for loose pulleys and the like, with special reference to those lubricators operated by centrifugal force; and it consists, chiefly, in securing a lubricating-cup within a pulley and pivoting a lever upon the pulley in such a manner that one arm of the lever shall come in contact with the lubricator and securing to the other arm of the lever an adjustable weight or feed, which when the pulley is in motion causes a variable pressure on the lubricator, according to the rapidity of the travel of the pulley, and feeds the lubricant upon the shaft of the pulley.

For the better understanding of my invention and its mode of operation attention is invited to the following specification and accompanying drawings, forming a part hereof, in which—

Figure 1 shows a perspective of a lubricating-cup and the operating device in position on the pulley-hub and their relation to each other. Fig. 2 shows a plan view of the under side of the cover of the cup; Fig. 3, a side elevation of the cup, and Fig. 4 shows a side elevation of a different form of cup and lever attached.

Like letters of reference show corresponding parts in all of the drawings.

Referring to the drawings, A designates a loose pulley, and *a* the hub of the same. Through hub *a* is drilled a hole in which is inserted the funnel *b* of a lubricator-cup B. This cup B is a cylindrical vessel terminating at its lower end in a funnel *b*, as shown in Fig. 3. Over the cup B is placed a cap or cover D, into which the cup telescopes, and in the cup is placed the lubricant, which is preferably grease of the consistency of paste.

In placing the cap D in position on the cylindrical part of the cup when the cap is nearly filled with the grease it is necessary to allow the air to escape from between the top surface of the cup and the upper surface of the grease in the cap, and in order to do this there is provided a hole *o*, located near the edge of the cap, as shown in Fig. 1.

When the cap is empty, there will still be some unused grease in the cup and funnel, and to prevent this grease from being drawn out by suction when the cap is removed there is provided in the top of the cap a small hole *n* and a valve *p*, opening inward, which keeps the grease from coming out of the top of the cap and admits the air to the inside of the cup when it is being removed. This valve is shown in Fig. 2.

Around the neck of the cup B is fitted a collar E, having an arm or bracket *e* extending at an angle upward to the height of the cup, to which is attached a lever, presently to be described. The lever G might be pivoted to one of spokes *d* of the pulley A; but the above-described manner is preferable, as it holds the cup steady and also is in a convenient position for attachment of the lever.

The lever for operating the lubricator consists of an angle-iron G, having two arms *g* and *h*. Said lever is pivoted at *i* to the arm *e* of the bracket. The arm *g* projects outward and impinges on the top of the cover D of the lubricating-cup. The arm *h* is screw-threaded at its outer end, and there is screwed thereon a weight H.

In Fig. 4 a cup of the form of an ellipse is shown, which is made of some flexible material, but it will be seen that the lever operates the same whatever the form of the grease-cup, provided that the arm *g* can come in contact with the lubricator to force the lubricant upon the shaft of the pulley.

The mode of operating my device is as follows: The lever is adjusted to the speed of the pulley and the consistency of the grease by screwing the weight H up or down on the arm *h*. When the pulley is in motion, the centrifugal force will cause the weight to approach the rim of the pulley, and the greater the rapidity of the pulley the farther out the weight will be carried. This action will force

the arm *g* upon the top of the cup and force the grease down upon the shaft of the pulley. The pressure upon the lever will be a variable one, according to the rapidity of the travel of the pulley and the length or distance between the weight and the pivot of the lever. In this manner the lubricant will be forced upon the shaft according to its need or according to the speed of the pulley.

The lever-arm *g* will operate in Fig. 4 upon the upper side of the lubricator the same as it does on the top of the cap in Fig. 1.

Having now described my invention, what I claim, and desire to secure by Letters Patent, is—

1. A lubricator for pulleys, operated by centrifugal force, consisting of a cup within the pulley for holding the lubricant, a fulcrum, a lever pivoted to the fulcrum and adapted to come in contact with the cup, whereby the lubricant is forced upon the shaft of the pulley, and a weight attached to said lever, for the purposes shown.

2. A lubricant for pulleys consisting of a cup secured in a pulley, a fulcrum, a lever, pivoted to the fulcrum, and adapted to press upon the cup and a weight of varying resistance adjustably attached to said lever, whereby the feed of the lubricant is controlled by the rapidity of the travel of the pulley, for the purposes shown.

3. A lubricator for pulleys, consisting of a cup secured in the pulley, a cover for said cup, a fulcrum secured around the cup, a lever pivoted to the fulcrum and adapted to press upon said cover and a weight adjustably secured upon one arm of the lever to be operated, as and for the purposes shown.

4. A lubricator for loose pulleys consisting of a cup secured in the hub of the pulley, a cover for said cup telescoping upon said cup and provided with an air-hole through said cover near its bottom, a valve on the inner side of the cover, and a weighted lever adapted to press upon said cover to force the lubricant upon the shaft of the pulley when the pulley is in motion.

5. A lubricant for loose pulleys consisting of a cup B, with funnel *b*, cover D, fulcrum *e*, and lever G, pivoted to said fulcrum having arms *g*, and *h*, and weight H, all combined to operate as and for the purposes shown.

In testimony whereof I affix my signature in presence of two witnesses.

GEORGE E. DAVIS.

Witnesses:
M. M. CADY,
HENRY C. RECHE.