July 25, 1972 L. A. ZWEIG 3,679,483

APPARATUS FOR CLEANING MEMBERS WITH FLUIDS

Original Filed May 2, 1968 7 Sheets-Sheet 1

FIG. 1

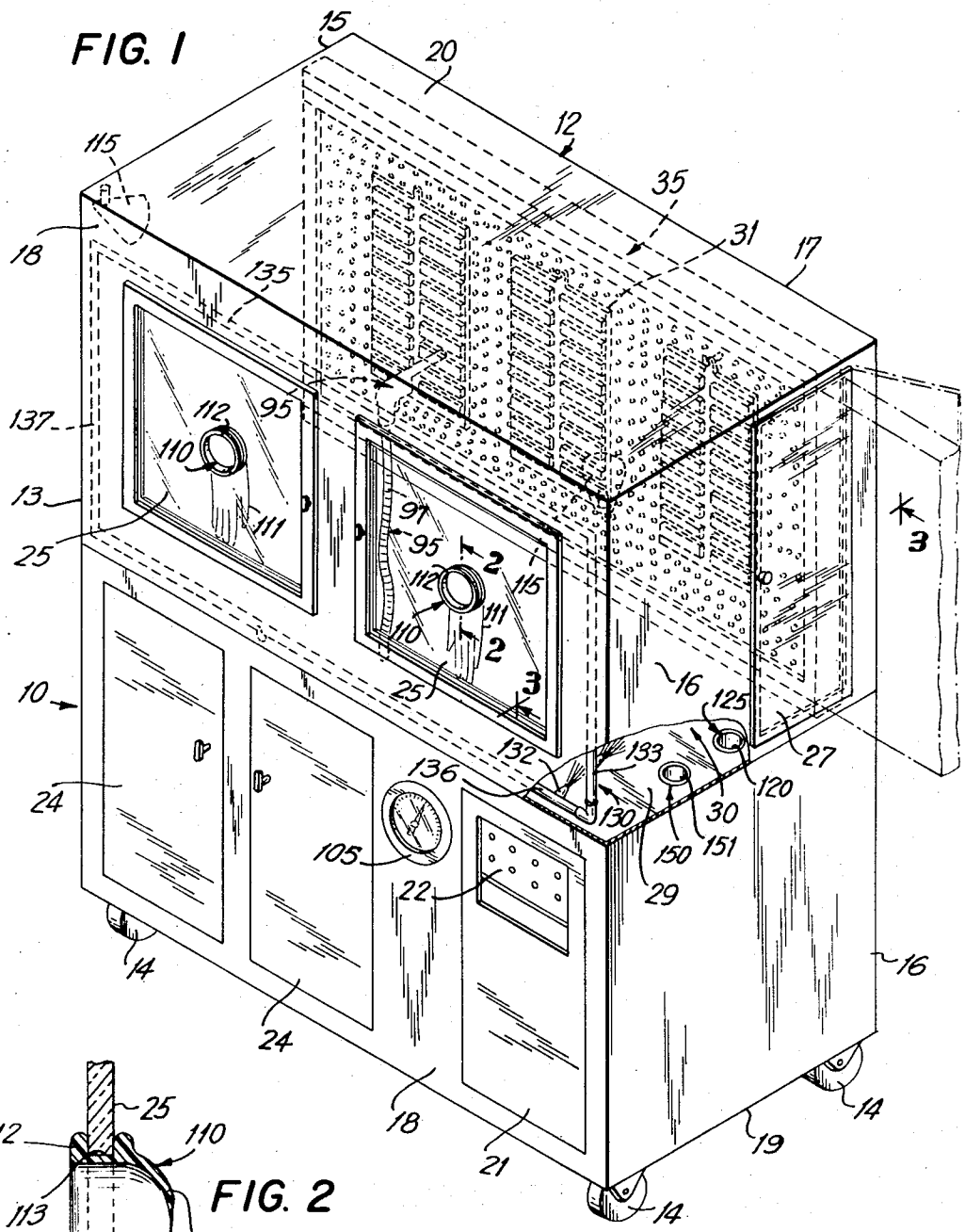

FIG. 2

INVENTOR.
LEON A. ZWEIG

BY

Leonard W. Sewall

ATTORNEY

APPARATUS FOR CLEANING MEMBERS WITH FLUIDS

Original Filed May 2, 1968 7 Sheets-Sheet 2

FIG. 3

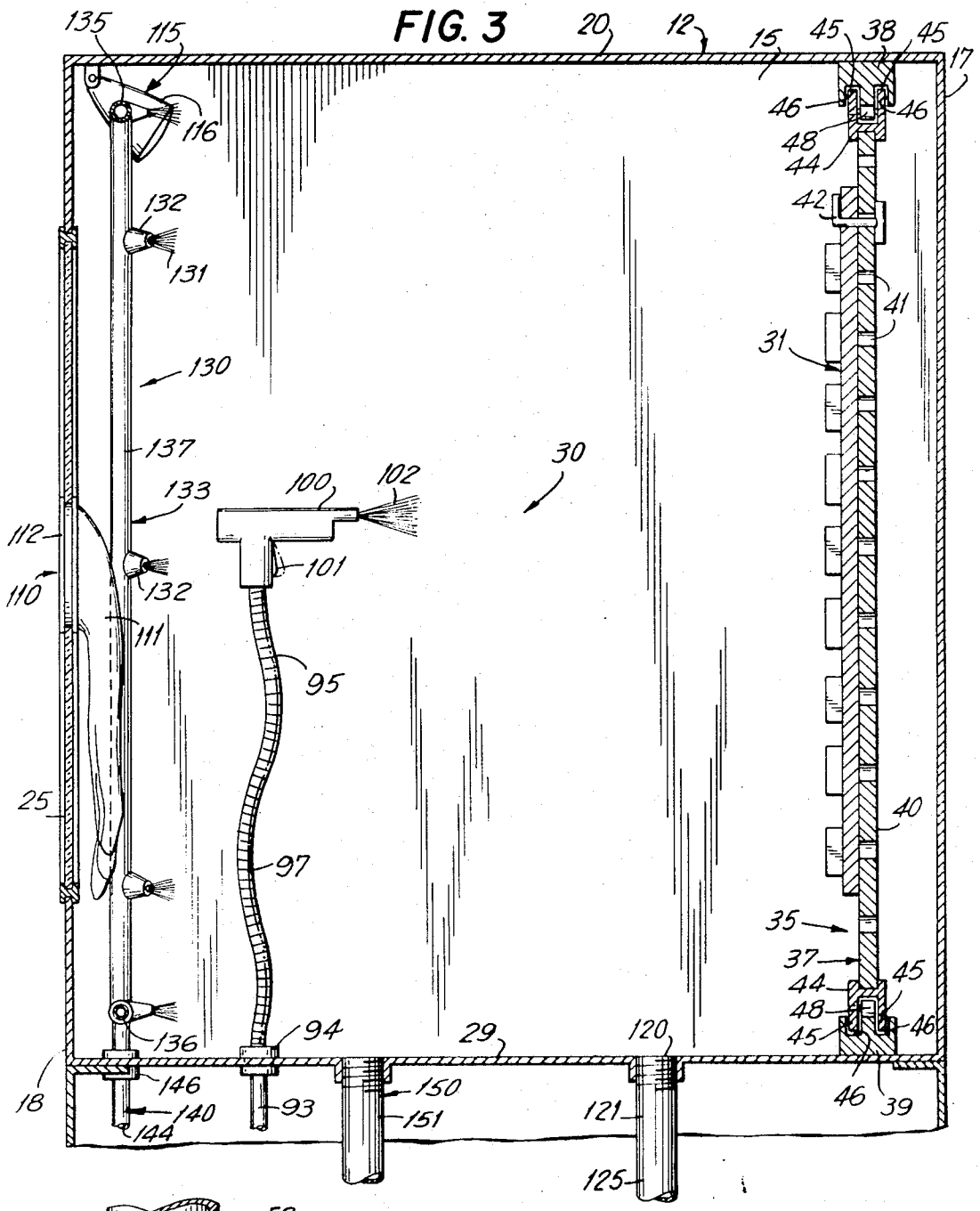

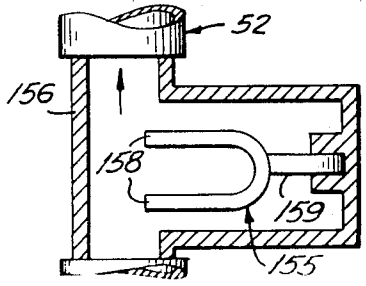

FIG. 5

INVENTOR.
LEON A. ZWEIG
BY
Leonard W. Ainoff
ATTORNEY

APPARATUS FOR CLEANING MEMBERS WITH FLUIDS

Original Filed May 2, 1968 7 Sheets-Sheet 3

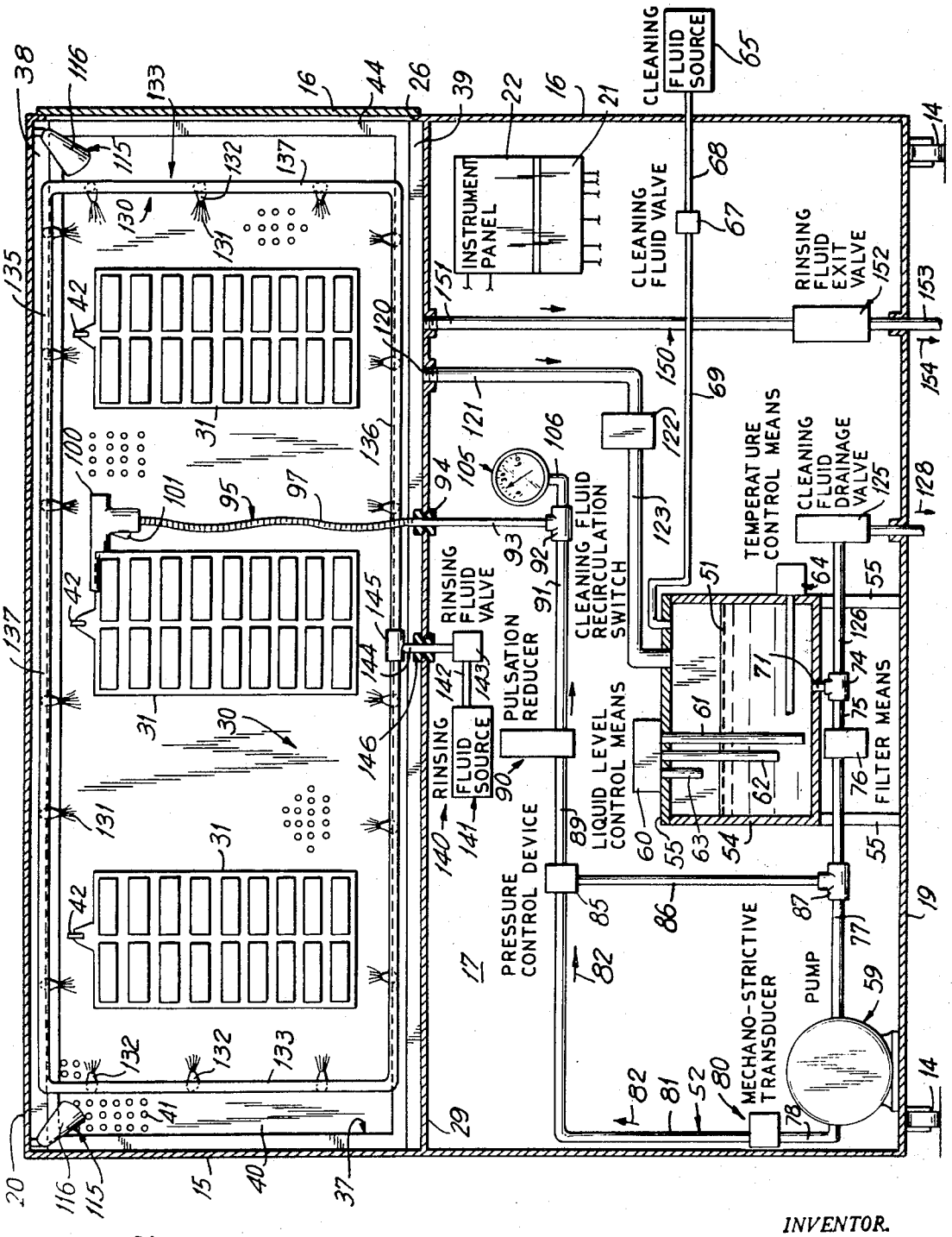

FIG. 4

INVENTOR.
LEON A. ZWEIG

BY Leonard W. Senff
ATTORNEY

APPARATUS FOR CLEANING MEMBERS WITH FLUIDS

Original Filed May 2, 1968 7 Sheets-Sheet 4

FIG. 7

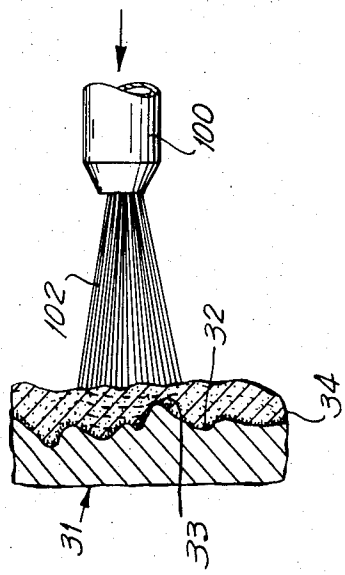

FIG. 6

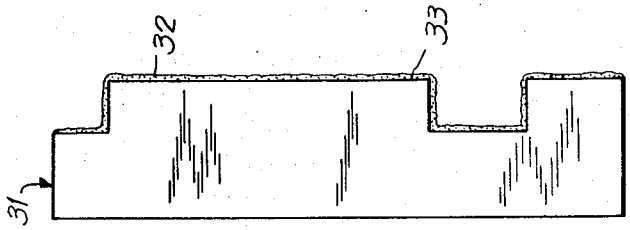

INVENTOR.
LEON A. ZWEIG

BY
Leonard W. Serafin
ATTORNEY

APPARATUS FOR CLEANING MEMBERS WITH FLUIDS

Original Filed May 2, 1968 7 Sheets-Sheet 5

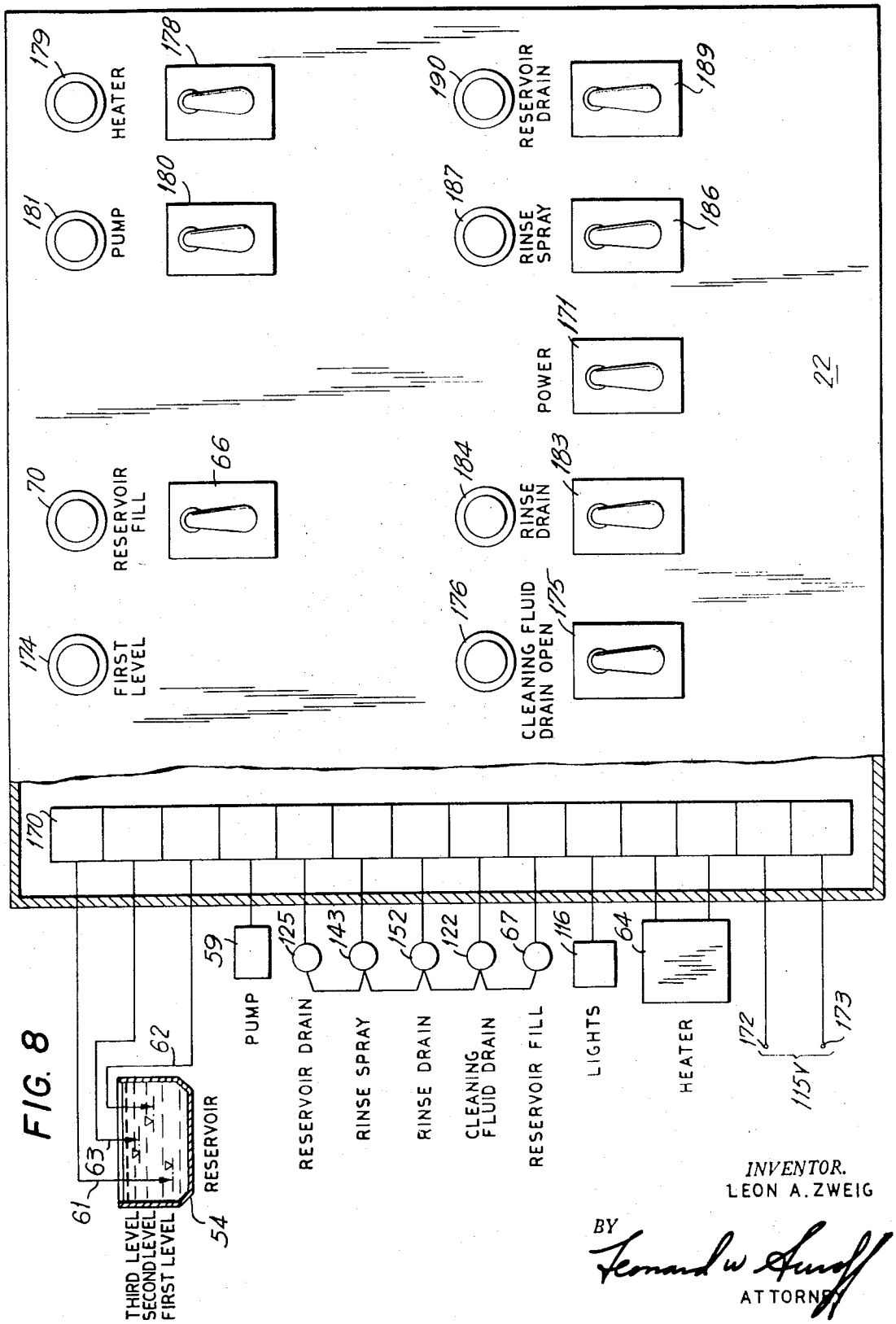

FIG. 8

INVENTOR.
LEON A. ZWEIG

BY Leonard W. Sandoff
ATTORNEY

APPARATUS FOR CLEANING MEMBERS WITH FLUIDS

Original Filed May 2, 1968 7 Sheets-Sheet 6

FIG. 9

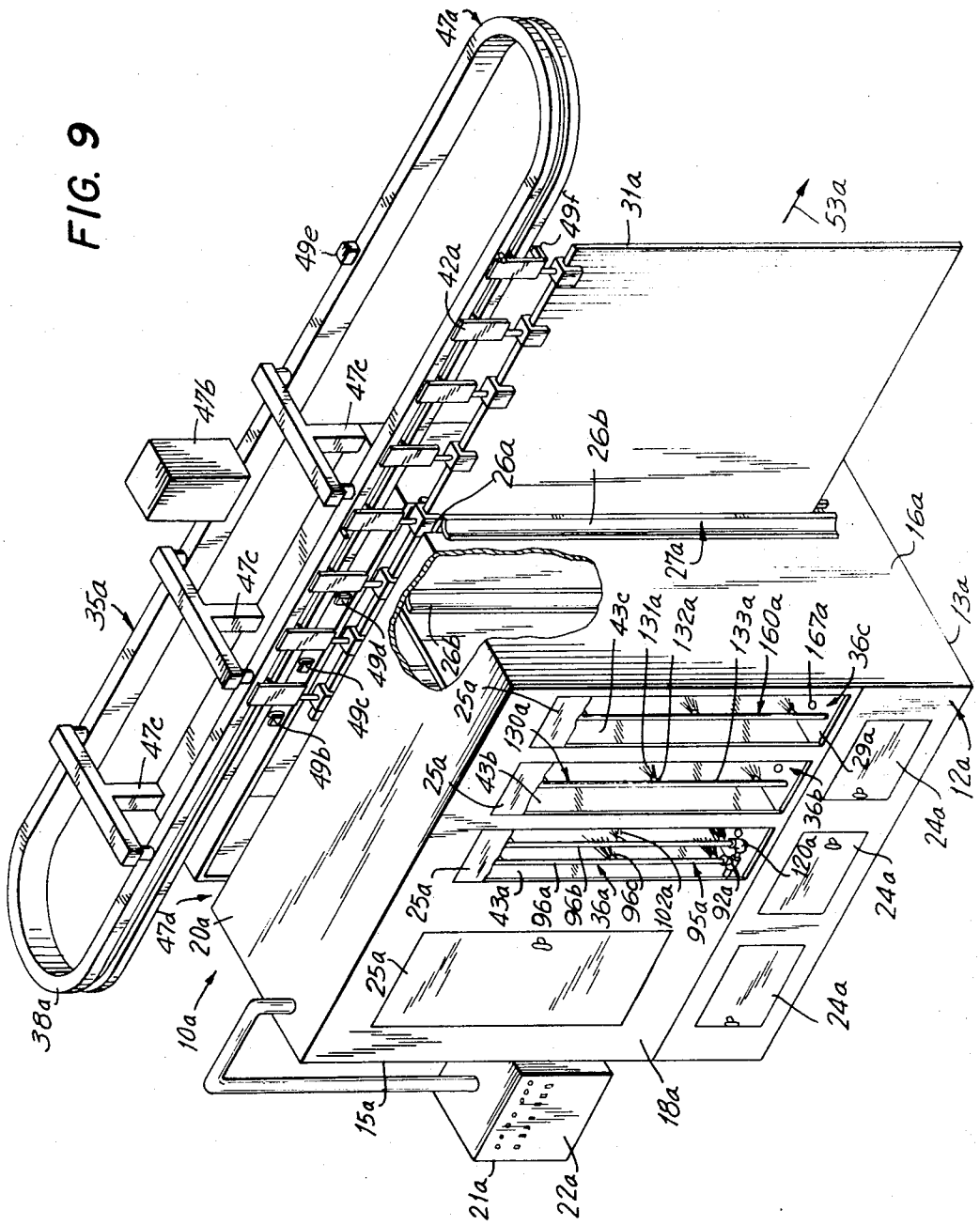

INVENTOR.
LEON A. ZWEIG

BY Fernand W. Smoot
ATTORNEY

APPARATUS FOR CLEANING MEMBERS WITH FLUIDS

Original Filed May 2, 1968 7 Sheets-Sheet 7

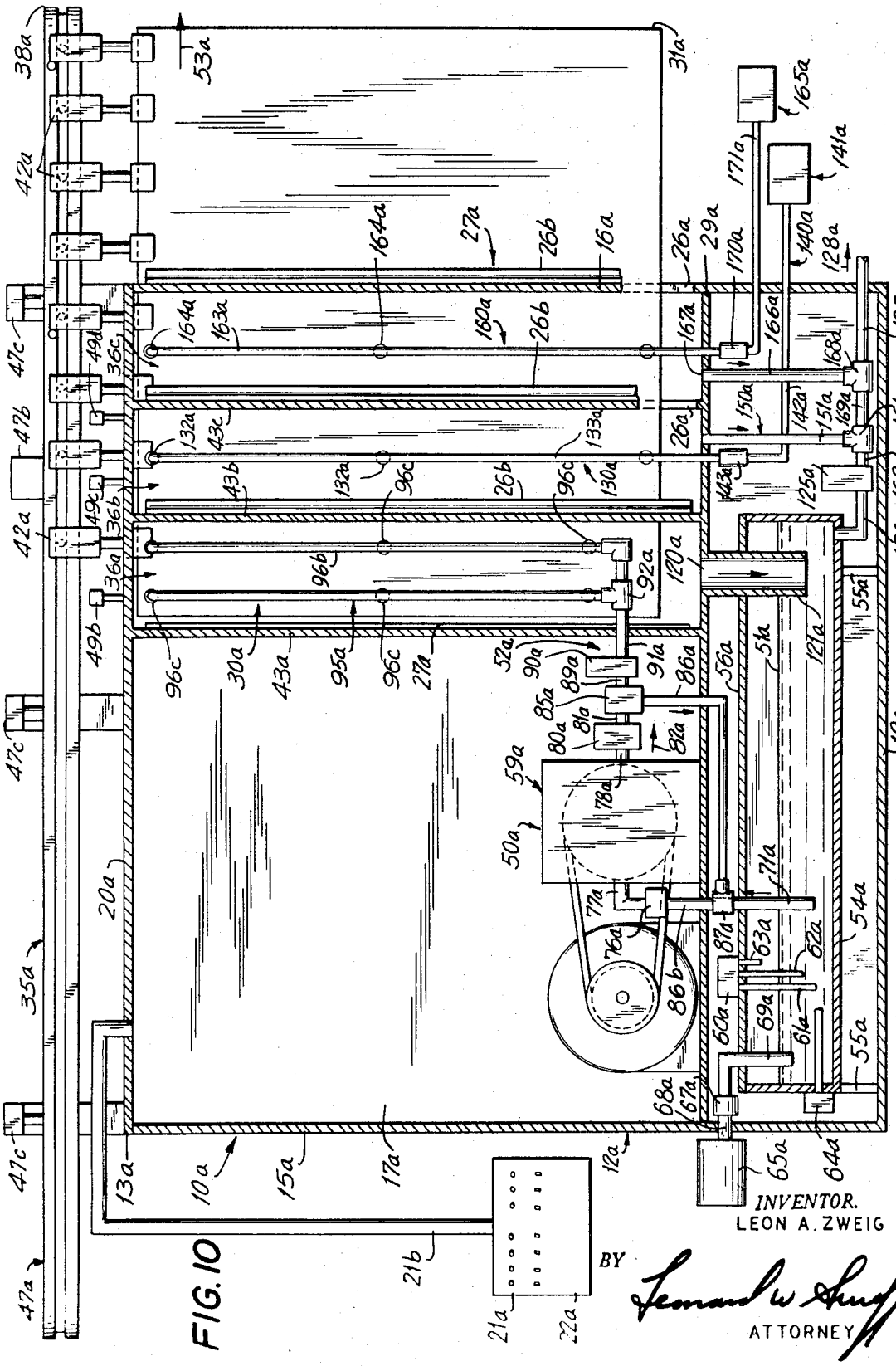

FIG. 10

INVENTOR.
LEON A. ZWEIG
BY
Leonard W. Suroff
ATTORNEY

United States Patent Office

3,679,483

Patented July 25, 1972

1

3,679,483

APPARATUS FOR CLEANING MEMBERS WITH FLUIDS

Leon A. Zweig, Chicago, Ill., assignor to Bell Tech Systems, Inc., Chicago, Ill.

Original application May 2, 1968, Ser. No. 726,081, now Patent No. 3,542,592, dated Nov. 24, 1970. Divided and this application Mar. 31, 1970, Ser. No. 24,201

Int. Cl. B08b 3/02

U.S. Cl. 134—46 9 Claims

ABSTRACT OF THE DISCLOSURE

The present invention discloses apparatus for cleaning a variety of objects, such as printing plates or dies, having thereon foreign deposits, with a cleaning fluid. The equipment includes a chamber within which the member to be cleaned is supported and sequentially sprayed with cleaning fluid under controlled pressure and any remaining foreign deposits removed by a rinsing fluid. The fluids are supplied by nozzles either mounted in fixed spaced relation to the supported member or manually controlled by a spray gun for directing the fluid. Apparatus for continually supplying the cleaning and rinsing fluids through the nozzle of the spray gun or fixed mounted nozzles is provided with a complete system which automatically controls the relationship of the temperature, pressure, supply, recirculating and other automatically inter-related operations of the system. The cleaning fluid may also be energized with sonic energy waves to further enhance its cleaning effectiveness.

CROSS-REFERENCE TO RELATED APPLICATIONS

This is a division of application Ser. No. 726,081, filed May 2, 1968, now Pat. No. 3,542,592.

BACKGROUND OF THE INVENTION

Field of the invention

This invention relates broadly to cleaning of members having foreign deposits thereon, and particularly to an improved method and apparatus for removing foreign deposits in the form of printing inks and other impacted material from printing plates or die members.

Prior art of the invention

Heretofore, there has been utilized in the industry various means for cleaning of rubber, metallic and/or plastic printing plate members subsequent to their usage and generally prior to storage. Essentially in the printing of various objects a variety of plates are used that are subject to be reused at a future date and it is therefore important that subsequent to their reuse and prior to storage that they be intimately cleaned so as to prevent the hardening and caking of any of the inks or other materials used as the printing medium. To date these printing members, coated with inks, have been generally cleaned by the normal practice employed commercially to date, which has been to manually scrub the members with brushes, or soaking them in liquids at elevated temperatures, as well as combinations of both. In addition, detergents or solvents are generally necessary for cleaning of all types of links. Thus, due to the number of plates that many companies utilize, often in the thousands, maintenance can be a most time consuming and economically expensive operation. Since production runs continually necessitate changes to new plates, this requires a continuous cleaning of great numbers of plates that have to be attended to in order to be assured that at the subsequent usage they are available in a clean state for immediate use

2

without any deterioration due to inks that have been left to remain there for prolonged periods of time.

OBJECTIVES OF THE INVENTION

It is the general object of the present invention to avoid and overcome the foregoing and other difficulties of and objections to prior art practices by the provision of a cleaning system that utilizes pressurized cleaning liquid in sufficient quantities and at proper pressures and velocities to obtain the removal of foreign deposits from members without necessitating emersion thereof and which cleaning may be accomplished short periods of time.

Another object of the present invention is to provide apparatus for cleaning which employs energized cleaning fluid having sonic energy waves contained therein which sonically vibrates the surface or material to be cleaned, thereby to loosen the boundary layer of adhering material between the foreign deposits, as for example in the form of inks, from the underlying object to be cleaned, such as a printing plate member.

Another object of the present invention is to provide apparatus which is operative to automatically remove the ink laden deposits from the to be cleaned member with cleaning fluid on a substantially automatic basis.

Another object of the present invention is to provide a cleaning system whereby the printing member to be cleaned may be automatically placed within a cleaning chamber and the cleaning fluid may be directed thereagainst either manually or automatically for a sufficient period of time to obtain the desired effective cleaning and thereafter the printing member may be dried for a selected period of time.

Another object of the present invention is to provide a cleaning system for automatically cleaning soiled printing members with a cleaning fluid that is introduced into a cleaning chamber for a selected period of time at a selected temperature and velocity to obtain the desired cleaning effects and thereafter the printing members are rinsed to flush away any adhering foreign deposits.

Another object of the present invention is to provide apparatus for the removal of hardened ink deposits from a surface of a printing member in a rapid manner and with the exertion of a minimum of physical energy by the person affecting such removal.

Another object of the present invention is to provide apparatus which avoids the possibility of damage, such as, scoring, scratching or chipping, of the regions of the member that is cleaned.

SUMMARY OF THE INVENTION

The aforesaid objects of the present invention, and other objects which will become apparent as the description proceeds, are achieved by providing a series of features, steps and elements assembled and working together in interrelated combination to provide the cleaning effects of the present invention. Actual tests have demonstrated that by the application of the cleaning methods and apparatus of this invention, cleaning results are obtainable which are a multiplicity of times greater than heretofore known or practiced, with accompanying substantially less wear on the surfaces of the cleaned member and consequent longer life of the member, together with the attainment of unexcelled precision cleaning results.

In accordance with one preferred embodiment of the invention a housing is provided that contains substantially all of the various integrated assemblies of the invention. Chamber means is contained in the housing means and is of a size preferably adapted to contain several members to be cleaned at the same time. Support means is provided for retaining the member during the cleaning process. To facilitate the positioning of the member in the housing the

support means includes a sliding rack which slides out through a side door on the housing means and extends far enough out to permit the operator of the equipment to either secure thereto or remove from the rack the member or members to be cleaned.

To apply the cleaning fluid under high pressures cleaning fluid applicator means is provided which extends into the chamber means and is designed to be manually controlled by the operator such that it is in the form of a flexible conduit having a hand nozzle gun at one end thereof. So that the operator may properly control the hand nozzle gun a transparent front door is provided that has connecting means associated with it in the form of a pair of rubber gloves spaced apart which the operator can place his hands into and which permits him movement up to approximately at least his elbow so that he may pick up the hand gun and properly direct the pressurized jet of cleaning fluid against any particular member or members that he desires to be cleaned. Illuminating means for providing light is also provided to assist the operator in determining when a member is sufficiently cleaned so that he might commence the rinsing cycle. Contained in the housing means is also cleaning fluid supply means which is capable of constantly supplying a heated cleaning fluid under controlled pressure in sufficient quantities. Drainage means is also provided in communication with the housing to permit the removal of spent cleaning fluid and its recycling for future use. Since the cleaning fluid might contain a detergent that is costly, the equipment permits recirculating of the cleaning fluid numerous times by providing a filter device, before the cleaning fluid is recycled.

Rinsing fluid applicator means is also contained in the chamber means for spraying jets of rinsing fluid onto the member for removing and flushing away foreign deposits not removed by the cleaning fluid, or to clean it off to the extent that any detergents are no longer present on the surface thereof. Rinsing fluid supply means is provided in communication with the rinsing applicator means and is also contained within the housing means. In addition rinsing fluid drainage means to permit the removal of the spent rinsing fluid is also provided.

In accordance with another embodiment of the invention a more automated system is provided such that the member once again may be removed and placed in position exteriorly of the housing means so that the operator need not be inconvenienced to try and place the member therein. This embodiment contains a chamber means that is essentially subdivided into a separate cleaning chamber means, rinsing chamber means and drying chamber means, each one in communication with the other and having a common passage extending therethrough. Means are provided for conveying the member through the respective chambers and in order to indicate when to cycle the respective instrumentation associated with each chamber cycle control means is provided so as to program the individual cycles automatically such that they are activated and deactivated as the member progressively moves therethrough. In like manner cleaning fluid applicator means, rinsing fluid applicator means and drying means are associated with the respective chambers such that we properly clean each member.

Each of the above embodiments is adapted to be used with energizing means such that the cleaning effectiveness may be further enhanced by introducing sonic energy waves into the cleaning fluid prior to its engagement with the cleaning member. Thus, the invention comprehends the provision of means for energizing the cleaning fluid in sufficient volume and under sufficient pressure to effectively result in an energized fluid stream that is sprayed from one or more nozzles and strikes the surface of the member to be cleaned. The energy is in the droplets contained within the cleaning fluid is released, causing, depending on the degree of energy contained in the stream, either an implosive type action which produces a cavitational type effect on the surface to remove the ink or other foreign matter or an actual microfatigue of the foreign deposit from the member. The energized fluid has no deleterious effect on the printing plate member itself or the backing. Tests indicate that repeated cleaning of a single printing member, as many as twenty or more times, has no damaging effect on the printing member.

Since the invention finds ideal application for the removal of foreign deposits, whether or not completely dry, such as are found on printing or die members, the method and apparatus of this invention will be particularly described for the purpose of illustration in connection with the cleaning of printing members.

BRIEF DESCRIPTION OF THE DRAWINGS

Although the characteristics features of this invention will be particularly pointed out in the claims, the invention itself, and the manner in which it may be made and used, may be better understood by referring to the following description taken in connection with the accompanying drawings forming a part hereof, wherein like reference numerals refer to like parts throughout the several views and in which:

FIG. 1 is a perspective view of one form of cleaning apparatus in accordance with this invention, certain parts of its cabinet walls being broken away to reveal some of the apparatus contained therein;

FIG. 2 is a sectional view of the connecting means taken along line 2—2 of FIG. 1;

FIG. 3 is an enlarged longitudinal section of the upper half of the cabinet taken along line 3—3 of FIG. 1;

FIG. 4 is a diagrammatic view of the relationship of the various component parts thereof of the apparatus;

FIG. 5 is an enlarged sectional view of one form of mechano-strictive transducer to introduce energy waves into the cleaning fluid;

FIG. 6 is a side view of a member adapted to be cleaned by the present invention;

FIG. 7 is an enlarged view of a portion of the member of FIG. 6, showing the foreign deposits contained thereon;

FIG. 8 is a wiring diagram of the electrical components included in the cleaning device of FIG. 1;

FIG. 9 is a view similar to FIG. 1, illustrating another embodiment of the invention; and

FIG. 10 is a view similar to FIG. 4, illustrating the relationship of the parts contained in the apparatus of FIG. 9.

DISCUSSION OF THE INVENTION

Referring to the drawings and particularly to FIGS. 1–4 thereof, we have in assembled relation the cleaning device **10** of the present invention.

Housing means

The various integrated operating components of the apparatus of this invention are contained within, supported by or mounted on housing means **12** in the form of a cabinet **13** mounted on suitable rollers **14** as on in FIGS. 1 and 4, and which permits movement and transportation of the complete apparatus. The cabinet **13** presents end walls **15** and **16**, a back wall **17**, a front wall **18**, a bottom wall **19** and a top wall **20**. The cabinet **13** also presents as part thereof, an instrument case **21** which is contained on the front wall **18**. The instrument case **21** contains associated instrumentation and control devices whose control knobs and indicators appear on the front of an instrument panel **22** and within convenient view and reach of the operator.

The front wall **18** presents one or more hinged doors **24** through which there is apparatus components contained within and supported by the bottom wall **19** of the cabinet and may be conveniently reached for adjustment or repair. The front wall **18** of the cabinet may also present one or more front panels or doors **25** of a transparent material, such as clear plastic or glass, which may be mounted by hinges or on a track for

sliding, through which extend connecting means **110**, which is hereinafter discussed in more detail. The end wall **16** is provided with an entrance and exit opening **26** (see FIG. 4) having a chamber door **27** which acts to close the opening and is used in conjunction with the cleaning system of the invention. The cabinet **13** further includes a horizontal trough **29** below which the instrumentation is generally contained.

Chamber means

In general, the apparatus of this invention includes chamber means **30** which is utilized to contain the member **31**, during the various stages of the cleaning cycle, and the chamber means **30** is generally defined in this embodiment of the invention by the end walls **15** and **16**, back wall **17**, front wall **18**, the top wall **20** and the trough **29** extending in a horizontal plane substantially across the entire cabinet **14**. The trough **29** is contoured or tilted to collect the cleaning and rinsing fluids for removal from the chamber means **30**, and is mounted in sealed relationship to the cabinet walls, except as for the cleaning fluid drainage means **125**, and rinsing fluid drainage means **150**, as are provided therein and hereinafter discussed in detail.

Support means

To permit the members or objects to be cleaned, support means **35** is provided within the chamber means **30**, and includes a rack **37**, as best seen in FIG. 3, for removably supporting one or more members **31**, three being shown. As seen with respect to FIG. 1, when the chamber door **27** is open the rack **37** may be slid in or out from the cabinet and in this manner the versatility of the equipment is substantially enhanced. The rack **37** is adapted to be moved relative to the chamber means such that the members **31** may be secured and removed therefrom exteriorally of the cabinet **13**. In this manner the operator without having to enter the chamber **30** can place and remove the members from the rack.

As seen in FIG. 3, the rack **37** includes supports in the form of an upper track **38** and a lower track **39** secured in any conventional manner to the top wall **20** and trough **29**, respectively. The spacing between the upper track **38** and lower track **39** is such as compared to the size of the opening **26** in the end wall **16**, which has the door **27** secured thereto, such that the rack **37** may on its sliding track be removed therefrom. The rack **37** includes a center portion **40** which may be in the form of a peg board having a plurality of apertures **41** so that the members **31** may be mounted thereon at various spacings by means of hooks **42**. The rack **37** also includes a rail **44** surrounding it, which rail **44** as seen in FIG. 3, has complimentary fingers **45** so as to be slidably engagable with the upper and lower tracks **38** and **39** respectively. The tracks have a channel which is formed by complementary grooves **46**. The relative movement is facilitated by providing rollers **48** spaced between the tracks **38** and **39** and the rails **44** which permit slidability with a minimum of applied force.

Cleaning fluid supply means

As shown schematically in FIG. 4, the cleaning fluid supply means **50** is connected by means of conduit means **52** to the cleaning fluid applicator means **95**, the latter contained in the chamber means **30** and adapted to be manually controlled by the operator. The cleaning fluid supply means **50** is adapted to provide cleaning fluid **51** at sufficient pressures, and quantities in the order of 3 to 6 gallons per minute and in the range of from 200 pounds per square inch to 700 pounds per square inch, through the conduit means **52** which is connected to a series of tubes connected to various integrated portions of the system as hereinafter discussed. The components of the cleaning fluid supply means **50** is substantially contained in the lower portion of the cabinet **13** and

controlled by the instrument panel **22** on the front wall **18** thereof, and associated electro-mechanical components illustrated in the electrical schematic in FIG. 8.

To maintain a sufficient supply of the cleaning fluid **51** a reservoir **54** is provided in the form of a tank which should be of sufficient volume to insure an adequate storage of the cleaning fluid therein. The tank and reservoir may be of various capacities and in the present embodiment is capable of holding 20 gallons of cleaning fluid. The reservoir **54** by means of supports **55** is mounted on the bottom wall **19** in any conventional manner and may have a cover **56**. The cleaning fluid reservoir **54** has a liquid level control device **60** responsive to three values, hereinafter referred to as the first, second and third values, for convenience. The control device **60** has a first, second and third immersion elements **61**, **62** and **63** respectively, corresponding to each of said values. The liquid level control device **60** may be of the type manufactured by Warrick Co., designed to control the height of fluid in the reservoir **54** to stop the pump means **59** when the level of the cleaning fluid is below a certain first value and can start the pump means when the level is above the higher predetermined second value. The liquid level control device **60** is also responsive to a certain maximum capacity filling or third value and to stop the flow of cleaning fluid into the reservoir **54** when the third value is reached. In addition the liquid level control device **60** is also responsive to stop the temperature control means **64** when the cleaning fluid **51** is below the second value and to start the temperature control means **64** when the cleaning fluid is above the higher predetermined second value.

At the start of the cleaning operation, the reservoir **50** is substantially filled with the cleaning fluid **51** to provide an ample supply of liquid to use in cleaning the member **31**. The flow is initiated from the cleaning fluid source **65** by initially contacting the control button switch **66** (see FIG. 8) which opens the cleaning fluid valve **67** and the cleaning fluid from the supply source **65** flows through the filling tube **68** first to the valve **67** and thereafter through the filling tube **69** into the reservoir tank **50**.

As soon as the liquid in the reservoir **50** has reached the second level, as sensed by the first element **61** the system is open. The temperature control means **64** may be of any conventional type as for example, that manufactured by Chromalox, Edwin L. Wiegand Co., Pittsburgh, Pa., Model B, and is electrically connected such that the light bulb **70** on the instrument panel **22** of the apparatus as shown in FIG. 1, will indicate when the heater is on.

The flow of liquid will continue until the liquid control means reaches the second level, as indicated by the second element **62**, this permits the operator to start the pump means **59** operating and at the same time to start the temperature control means **64**, so that the cleaning fluid **51** is heated to an elevated temperature which may generally be in the range of 50 to 190 degrees Fahrenheit. The tank **54** will continue to be filled until the third level is reached and the control device **60** is activated by the third element **63** which is electrically connected to the filling value **67** and the latter will be automatically closed when the third level is reached.

The cleaning fluid exits through output tube **71** that is connected to a cleaning fluid strainer or filter means **76** which acts as a filtering device to remove particle debris which have been removed from the members during the cleaning process and may be of a commercial type as manufactured by Hayward Manufacturing Co., Inc., Model 72. The straining means **76** is connected to the pump means **59** by the connecting tube **77** and the pump means is adapted to pump the fluid at a rate of four gallons per minute and in the range of from 200 to 700 pounds per square inch. The pump may be of

a commercial type as purchased from Hypro, four cylinder piston pump, Model C5540E.

The pump tube **78** extends from the pump means **59** and is connected to the energizing means **80** in the form of a mechanostrictive transducer which is adapted to impart sonic energy waves to the cleaning fluid as it passes through the conduit means **52**. The energizing means is discussed hereinafter in greater detail with respect to FIG. 5.

The cleaning fluid continues through exit tube **81**, in the direction of arrow **82**, and enters the pressure control device **85** which is designed and acts as a pressure relief valve which is in communication with the conduit means **52** and is responsive to pressure in the conduit means, such that when the pressure is above a predetermined value it is automatically recycled through the recycle tube **86** back into the connecting tube **77** by the T joint **87** and in through the pump means **59**. This occurs when the liquid level of the reservoir **54** has reached the second value and the pump means **59** starts operating but the operator has not utilized his hand gun such that pressure is building up in the system and in this way the pressure control device **85** recycles the cleaning fluid through the system without any possibility of danger due to excessive back pressure. The pressure control device **85** is a commercial unit as manufactured by Hypro Inc. Valve, Model No. B3390–13.

After leaving the pressure control device **85** through the tube **89** the fluid goes through the pulsation reducer means **90** which prevents any major fluctuations and is in communication with the conduit means **52** to reduce any pressure surges occurring in the conduit means. The pulsation reducer means **90** is of a commercial type and may be of the type supplied by Birdwell Pulsation Reducer Snyder Texal, Model No. 800. The fluid leaves the pulsation reducer **90** through the tube **91**, which by tee joint **92** is coupled to the feed tube **93** which enters the chamber means **30** through a grommet **94** or other sealing element and is coupled to the cleaning fluid applicator means **95** by means of flexible conduit **97** which terminates in the hand gun **100**. In addition a pressure gauge **105** which is mounted on the front panel **21** is connected via pressure tube **106** such that the operator continuously sees the pressure in the system which may be indicated in the terms of gravity forces so that he has a better appreciation of the availability of the energy in the cleaning fluid for the desired end purpose.

The cleaning fluid **51** used, is preferably a solvent to oils and greases, and may have a beneficial effect on the rubber plated metals or materials from which the member is constructed, such as alkaline detergents for rubber printing plates. Water with a detergent has been found to be satisfactory. Numerous other cleaning fluids may be used which possess high solvent capabilities and low corrosion characteristics, which are compatible with the material from which the member is composed. The cleaning fluid should in part be in liquid form, and adapted to be cavitated by the application of sonic vibrations thereto.

Cleaning fluid applicator means

Cleaning fluid applicator means **95** is provided within the chamber means **30**, and adapted to be manually controlled by the operator. The cleaning fluid applicator means **95** includes the flexible conduit **97** connected at one end to the nozzle gun **100** adapted to be hand held and having a trigger **101** which activates the valve contained in the nozzle gun **100** to permit the flow of a jet **102** of cleaning liquid therefrom. At its opposite end the flexible conduit **97** is connected to the cleaning fluid supply means **50** through the trough **29**. The seal **94** provides a liquid tight chamber. The flexible conduit **97** may be of sufficient length so as to permit the operator to manually direct the jet **102** of cleaning fluid against the members contained on the support rack **37**. This permits the operator to concentrate on any particular area of the member that requires more cleaning than another and also permits the operator to selectively clean specific members that may be more encrusted with particular ink or other deposits contained thereon.

Connecting means

As seen in particular with reference to FIGS. 1–3 connecting means **110** is in communication with the cleaning fluid applicator means **95** for manual control of the cleaning hand nozzle gun **100**, such that the operator while substantially positioned exteriorly of the chamber means **30** has proper control of the hand nozzle gun **100**. The connecting means **110** includes at least one flexible member in the form of a glove **111** extending through the front door **25**, two gloves being shown in FIG. 1, one through each of the respective doors, whereby the hand of the operator may be placed therein for holding and operating the hand nozzle gun **100**. The gloves **111** are provided with a skirt **112**, as seen in FIG. 2, which is adapted to have an annular groove **113** so that it may be positioned within an opening **114** provided in the respective front doors. The operator merely inserts his hand in the glove which is long enough to permit him to grab hold of the nozzle gun **100** and to permit proper manipulation thereof. The gloves **111** are spaced apart a distance, and are of sufficient length to permit the switching of the nozzle gun **100** from the left hand to the right hand and vice versa, without having to open the front doors **25**.

Illuminating means

As seen in FIG. 4 illuminating means **115** is provided in the form of a pair of spot lights **116** which are directed at the rear of the chamber means **30** such that the operator when looking through the clear front doors **25** may easily see when the foreign deposits have been sufficiently removed from a particular member so that he might then commence the cleaning of the next member or so that the rack **40** may be removed from the chamber **30** for the placement of the next group of members thereon.

Cleaning fluid drainage means

After the cleaning fluid **51** has been directed by the operator against the member **31** for the period of time desired the spent cleaning fluid is then available for recycling through the reservoir **54**. To accomplish this the trough **29** is angled such that the spent cleaning fluid collects in a corner thereof and exits through the trough into opening **120** connected to cleaning fluid drainage tube **121** (FIG. 4) and in turn to a return valve **122**, which in turn is connected to a reentry tube **123** into the reservoir **54**. When the cleaning cycle is in process the solenoid valve **122** is in its open position so that the cleaning fluid **51** automatically flows through drainage tube **121** and reentry tube **123** into the tank. If desired it is possible to dispense with the recycling of the cleaning fluid into the reervoir means for reuse in cleaning.

At the completion of the cleaning cycle and after the cleaning fluid has been used for a number of applications it is possible to drain the reservoir means **54** of the cleaning fluid and accumulated foreign deposits, and in which case the cleaning fluid drainage valve **125** is opened and the cleaning fluid in the reservoir **54** flows out through the tee joint **74** into exit tube **126** through valve **125**, and out through the outward flow tube **127** in direction of arrow **128**, this tube may be connected directly to a drain if desired.

Rinsing fluid applicator, supply and drainage means

To continuously remove any debris remaining after the cleaning fluid cycle is performed it is preferable for most members to apply a rinsing fluid thereto to flush away foreign deposits not previously removed, or redeposited thereon by the dirty cleaning fluid. This is accomplished preferably by a number of spraying jets directed at the member from which the deposits are to be removed. The

rinsing fluid applicator means **130** is in communication with and mounted in the chamber means **30** in fixed space relation to the member **31** for spraying jets **131** of rinsing fluid onto the member. The rinsing fluid applicator means **130** comprise one or more nozzles **132** and a manifold **133** on which the nozzles **132** are carried in spaced relation to and directed at the back wall **117** of the chamber means **30**. The manifold **133** as seen in FIGS. 1 and 3 is generally contained around the front doors **25** of the chamber means **30** and includes an upper branch **135**, a lower branch **136** and one or more intermediary branches **137** connected together and secured to the cabinet walls in any conventional manner. The nozzles **132** are sufficiently spaced from the member **31** to properly direct their spray thereagainst and obtain the desired final cleaning job.

In association with the rinsing fluid applicator means **130** we have a rinsing fluid supply means **140** which continuously operates from a fluid source **141** through a fluid tube **142** into a valve **143** and then through a connection branch **144** which enters the chamber means **30** via seal **146** and by means of a T joint **145** is connected to the manifold **133**, through the trough **29**. The number may vary as desired. In addition the rinsing fluid may also be applied through the same means as the cleaning fluid, namely the hand directed nozzle gun.

In communication with the chamber means rinsing fluid drainage means **150** is provided for continuously removing spent rinsing fluid therefrom. A fluid removal tube **151** is provided that is connected to the trough **29** in a conventional manner at one end thereof and at its opposite end with a rinsing fluid drainage valve **152** which has a tube **153** extending therefrom and exiting from the cabinet **13**. The rinsing fluid drainage valve **152** is only opened when a cleaning cycle is complete and the cleaning fluid recirculation valve **122** is closed so that the liquid exiting from the chamber means **30** is sure to flow through the rinsing fluid drainage means **150**, in the direction of arrow **154**.

Energizing means

Energizing means **80** may be utilized in conjunction with the invention for enhancing the cleaning effectiveness thereof by introducing energy waves into the stream of cleaning fluid prior to it exiting from the fluid applicator means **95**. The energy waves are introduced in the sonic frequency range, and for the purposes of this invention the sonic frequency range is defined between 60 cycles per second to 1,000,000 cycles per second, and the energy is generally audible in the range of 60 cycles per second to 16,000 cycles per second and inaudible to the operator in the frequency range of 16,000 cycles per second to 1,000,000 cycles per second. A frequency range of from approximately 5,000 to 40,000 cycles per second has been found most suitable.

The energizing means **80** is in communication with the conduit means **52** and preferably placed in position after the cleaning fluid leaves the pump means **59**, and if desired may even be embodied within the nozzle of the hand held nozzle means **100**. As illustrated in FIG. 6, a mechano-strictive transducer which may be in the form of a tuning fork **155**, of a selected frequency is coupled to a T **156** with the prongs **158** thereof extending into the conduit **52**, a preselected amount so as to be engaged by the stream of liquid flowing therethrough in the direction of arrow **82**. The tuning fork is selected to operate in a defined frequency range so that for a pressure selected in the range of approximately 300 to 700 pounds per square inch we have an optimum transmission of the energy waves to the fluid. The flow of the fluid in the conduit means **52** cause a vibration of the prongs **158** which is transmitted through the neck portion **159** to the T **156** and in turn conduit **52** with vibratory waves set up in the conduit means **52** and introduced into the fluid. In this manner without any electrical energy sonic energy may be introduced into the cleaning fluid.

If desired the conduit may be designed to extend through an ultrasonic motor as illustrated in U.S. Pat. No. 3,165,-299, or through other commercially available equipment that is capable of introducing energy waves of sufficient amplitude to transmit the waves through the fluid.

Applicant has found that the energy waves are maintained in the fluid until such time that they strike the foreign deposits on the member and have the effect of coupling this energy to said foreign deposits and particularly the boundary layer as illustrated in FIGS. 6 and 7, which energy waves act to effectively fatigue the bonding agent between the foreign deposits **32** and member **31** such that they are easily removed therefrom. Accordingly, it is necessary that the proper frequency pressure and intensity of energy waves are selected from the particular application and which combination may be varied depending upon the type of member or type of foreign material to be removed.

Accordingly, with respect to the cleaning of the surface **33** of the member **32** sonic energy waves in the frequency range of 500 cycles per second to 1,000,000 cycles per second can be applied for treatment of the member to produce beneficial cleaning effects therein. The path of waves may be of a continuous or pulsed wave pattern which when properly transmitted to the selected portion of the member in accordance with the present invention, is capable of inducing a microfatigue action thereof.

By employing sonic vibrations it is possible to put considerable quantities of wave energy into the foreign deposits without any damage to the underlying material. This means that, looking at any small part of the foreign deposit, the passing of the energy wave carried by the jet stream causes a rapid oscillation of compression and tension stresses in the structure. This results in the microfatigue which acts to break away or loosen the bond between the surface **33** of the member **31** and the layer of foreign deposits **32**.

Essentially the foreign deposits are composed of a number of particles and retained by a bonding layer **34** to the member **31**. When the energizing means **80** is energized the vibratory energy of the sonic motor will create a series of elastic energy waves in the jet stream **102** of the cleaning fluid which appear as wave fronts moving in spaced relation to each other, a wavelength apart. These waves are coupled and transmitted to the foreign deposits **32** by means of the jet stream **102**. Each moving wave is carried along the jet stream **102** for transmission to the foreign deposits **32**. The spacing between the waves in the foreign deposits structure might be further apart than in the fluid medium of the jet stream because of the difference in the speed of sound in the fluid medium and the foreign deposits. The wave is purely physical, or mechanical in nature in that each complete wave includes an area of compression in one half of the wave and a corresponding area of tension or rarefaction in the other half of the wave. Thus, it may be understood that soundwaves in passing through any material create a series of alternate areas of pressure and tension, in which particle motion is extremely slow, yet the magnitude of acceleration is high. This means that looking at any small part of the boundry layer, the passing of an elastic wave causes a rapid oscillation or compression and tension stresses in the structure to sever the foreign deposit along its boundary layer **34** by a microfatigue action.

Operation

While the practical application of one embodiment of this invention has been heretofore explained in connection with the cleaning of printing plate members, this invention finds more general application to the cleaning of numerous types of intricate articles and objects which defy satisfactory cleaning by immersion in a bath of cleaning fluid as heretofore practiced. As is evident from

the above disclosure, the method and apparatus of this invention can be advantageously and effectively employed in the cleaning of a wide range of intricate objects and articles, such as machinary, bearing assemblies and like devices whose intricate working elements present minute pores, cavities, passages or interstices containing impacted debris or other foreign material which must be thoroughly removed.

In accordance with this invention the member **31** or object to be cleaned is supported in the chamber means **30** and a nozzle of the cleaning fluid applicator means **95**, is connected to a cleaning fluid supply means **50**, and by means of which cleaning fluid under controlled pressure is applied to the supported member. The action produced is of such intensity as to penetrate into, and loosen the debris of impacted within the pores, cavities, passages and interstices of the member, while cleaning fluid pressure is applied to the face of the member to effectuate the removal of the debris or foreign material therefrom. The thorough cleaning of all the pores, cavities, passages and interstices of the object is thus effected by the combined action of the fluidized energy forces.

Operator experience in the use of this apparatus will reveal the time required by a particular operator to effect the cleaning of a particular type of member, or the time when a particular type of member should be subjected to cleaning fluid pressure. The cleaning time interval thus established may be indicated to the operator when cleaning subsequent objects of the same type.

FIG. 8 is a partially schematic representation of the related electrical components as mounted on the instrument panel **22** to perform the related functions for which the apparatus is designed. The instrument panel contains a series of switches and associated lights that are wired together in any conventional manner by one skilled in the art to obtain the desired results. The various solenoid switches and other components are shown wired to a terminal board **170** mounted on the rear of the instrument panel **22** and the terminal board **170** is thereafter connected to the switches, lamps and relays (not shown).

To commence the operation of the cleaning process the member **31** is positioned within the chamber **30** and the power switch **171** is placed in its on position to permit the current which is **115** volts, from the terminals **172** and **173** to power the equipment. The lights **116** in the chamber **30** are connected to the power switch **171** so that they automatically go on with the power. The operator then engages the tank fill switch **66**, which opens the reservoir fill valve **67** and the light **70** goes on at the same time. If the tank **54** is empty and the fluid is below the first level as indicated by element **61** the light **174** will go on to indicate to the operator that there is not sufficient liquid in the reservoir to start the pump **59** and heater **64**. As soon as the second level is reached the fluid engages element **62** and the light **174** goes off indicating to the operator that there is sufficient fluid in the tank **54**. If there is any delay and the fluid reaches the third level and engages the element **63** the valve **67** is automatically closed preventing the cleaning fluid from continuing therein. The cleaning fluid drain valve **122** is normally open and connected to switch **175** and light **176**. This pemits the cleaning fluid to be returned to the reservoir during the cleaning cycle. The element **62** is wired to the heater **64** and pump **59** and associated switches **178** and **180** such that if the cleaning fluid is below the second level then the power is available to start or continue operating the pump or heater. To heat the cleaning fluid the heater switch **178** is activated which energizes associated light **179**, and the heater **64** immersed in the tank **54** is powered to heat the cleaning fluid. The pump switch **180** is engaged and the associated light **181** is on with the pump **59** pumping fluid through the conduit means. The operator only has to pick up the hand gun **100** and pull the trigger **101** and the fluid is discharged therefrom for cleaning the member **31**.

After completion of the cleaning of the member **31** the pump switch **180** is closed such that the rinsing cycle may start. In addition the cleaning fluid drain is closed by closing switch **175** to prevent the rinsing fluid from flowing into the reservoir **54**. To begin the rinse cycle the rinse grain valve **152** is now opened by engaging switch **183** which turns on light **184**. The rinse spray valve **143** is then opened by engaging switch **186** which lights up **187** and permits rinsing fluid from source **141** to be discharged in the chamber. When the rinsing cycle is complete then the switches for the rinse spray **186** and rinse drain **183** are closed.

To remove the cleaning fluid from the reservoir **54** the reservoir drain switch **189** is engaged which lights up indicating light **190** and opens valve **125** to empty the tank. When this is completed the switch **189** is closed shutting the valve **125**. The power switch **171** may then be closed.

ANOTHER EMBODIMENT OF THE INVENTION

FIGS. 9 and 10 illustrate another embodiment of the cleaning apparatus **10*a*** of the present invention.

Housing means

The various integrated operating components of the apparatus **10*a*** are contained within, supported by or mounted on housing means **12*a*** in the form of a cabinet **13*a*** having end walls **15*a*** and **16*a*** a back wall **17*a***, front wall **18*a***, a bottom wall **19*a*** and a top wall **20*a***. The instrument case **21*a*** is enclosed and is suspended by a cable **21*b*** in the form of a pendent control which extends from the top wall **20*a***, and contains associated instrumentation and control devices whose control knobs and indicators appear on the front of the instrument panel **22*a*** and within convenient reach of the operator.

The front wall **18*a*** presents one or more hinged doors **24*a*** through which there is apparatus components contained within and supported by the bottom wall **19*a*** of the cabinet and may be conveniently reached for adjustment or repair. The front wall **18*a*** may also contain a plurality of doors **25*a***, which may be mounted on respective chambers, hereinafter discussed in detail. The cabinet **13*a*** further includes a horizontal trough **29*a*** below which the instrumentation is generally contained.

Chamber means

The apparatus includes chamber means **30*a*** which is utilized to contain the member **31*a*** during various stages of the cleaning cycle. The chamber means **30*a*** is divided into a cleaning or first chamber **36*a***, a rinsing or second chamber **36*b*** and a drying or third chamber **36*c***. Vertical partitions **43*a*** forms the end wall of the first chamber and partition **43*b*** separates the first chamber **36*a*** and second chamber **36*b***, with partition **43*c*** separating the second and third chambers. The trough **29*a*** is contoured or tilted with respect to each chamber for removal therefrom of the respective fluids. The chambers are adjacent to each other and connected together by a series of vertical openings **26*a*** which act respectively as the entrance and exit opening for the chambers and which openings extend along a substantially common plane and each large enough to permit the passage of the member therethrough.

A chamber door **27*a*** is mounted over each of the respective openings **26*a*** and may be in the form of a pair of flexible flaps **26*b*** adapted to be swung open in the direction of travel of the member **31*a*** entering a respective chamber.

Support means

Support means **35*a*** is provided for sequentially conveying the member **31*a*** through the respective chambers and may be in the form of a conveying means **47*a*** of an endless configuration that extends beyond the cabinet **13*a***, a

sufficient distance to permit the securement and removal of the member therefrom. The conveyor **47a** includes a track **38a** having a motor **47b** mounted thereon in any conventional manner for powering the chain drive contained in the track **38a**. Supports **47c** extend from the top wall **20a** of the cabinet **13a** and are connected to the track **38a** to maintain it in fixed position. A plurality of hooks **42a** extend from the track **38a** and are adapted to grip the member **31a** and support it during the various operations. The hooks **42a** are in vertical alignment with a channel **47d** extending along the top wall **20a** of the cabinet **13a** and which is in alignment with the openings **26a** to permit the member to move progressively through the cabinet **13a**.

Cycle control means

Cycle control means **49a** is provided to be responsive to the entering and exiting of the member **31a** through the chambers for automatically activating and then deactivating the cleaning fluid applicator means **95a**, rinsing fluid applicator means **130a** and drying means **160a** as the member progressively moves therethrough. Switches **49b**, **49c** and **49d** are mounted on the top wall **20a** in association with the first chamber **36a**, second chamber **36b** and third chamber **36c**, respectively. The switches are mounted in the path of the hooks **42a**, one or more of which may be provided with a contact arm **49f** for engagement with the switches. A switch **49e** is mounted on the track **38a** to stop the entire equipment when the member **31a** moving in the direction of arrow **53a** has the associate hook **42a** engage it. The location and number of switches may be varied in accordance with the size of the members and if the equipment is used on a continuous or intermittent basis.

Cleaning fluid supply means

As shown schematically in FIG. 10, the cleaning fluid supply means **50a** is connected by means of conduit **52a** to the cleaning fluid applicator means **95a**, the latter contained in the first chamber **36a**. The cleaning fluid supply means **50a** is adapted to provide cleaning fluid **51a** at sufficient pressures, and quantities in the order of 10 to 40 gallons per minute and under pressure in the range of from 200 pounds per square inch to 700 pounds per square inch, through the conduit means **52a** which is connected to a series of tubes connected to various integrated portions of the system as hereinafter discussed.

The components of the cleaning fluid supply means **50a** is substantially contained in the lower portion of the cabinet **13a** and controlled by the instrument panel **22a**, and associated electromechanical components previously discussed with respect to FIG. 8.

To maintain a sufficient supply of the cleaning fluid **51a** a reservoir **54a** is provided in the form of a tank which should be of sufficient volume to insure an adequate storage of the cleaning fluid therein. The reservoir **54a** by means of supports **55a** is mounted on the bottom wall **19a** in any conventional manner and may have a cover **56a**.

The cleaning fluid reservoir **54a** has a liquid level control or sensing device **60a** responsive to three values, hereinafter referred to as the first, second and third values, for convenience. The control device **60a** has a first, second and third immersion elements **61a**, **62a** and **63a** respectively, corresponding to each of said valves. The liquid level control device **60a** may be of the type manufactured by Warrick Co., designed to control the height of fluid in the reservoir **54a** to stop the pump means **59a** when the level of the cleaning fluid is below a certain first value and can start the pump means when the level is above the higher predetermined second value. The liquid level control device **60a** is also responsive to a certain maximum capacity filling or third value and to stop the flow of cleaning fluid into the reservoir **54a** when the third value is reached. In addition the liquid level control device **60a** when the cleaning fluid **51a** is below the second value and to start the temperature control means **64a** when the cleaning fluid is above the higher predetermined second value.

At the start of the cleaning operation, the reservoir **50a** is substantially filled with the cleaning fluid **51a** to provide an ample supply of liquid to use in cleaning the member **31a**. The flow is initiated from the cleaning fluid source **65a** by initially contacting the proper control switch which opens the cleaning fluid valve **67a** and the cleaning fluid from the supply source **65a** flows through the filling tube **68a** first to the valve **67a** and thereafter through the filling tube **69a** into the reservoir tank **50a**.

As soon as the liquid in the reservoir **50a** has reached the first level, as sensed by the first element **61a** the system is open. The temperature control means **64a** may be of any conventional type as for example, that manufactured by Chromalox, Edwin L. Wiegand Co., Pittsburgh, Pa., and is electrically connected to the instrument panel **22a** of the apparatus as shown in FIG. 9.

The flow of liquid will continue until the liquid control means reaches the second level, as indicated by the second element **62a**, and may automatically start the pump means **59a** operating and at the same time start the temperature control means **64a**, so that the cleaning fluid **51a** is heated to an elevated temperature which may generally be in the range of 50 to 190 degrees Fahrenheit. The tank **54a** will continue to be filled until the third level is reached and the control device **60a** is activated by the third element **63a** which is electrically connected to the filling value **67a** and the latter will be automatically closed when the third level is reached.

If the pumping means **69a** is operating and the cleaning fluid applicator means **95a** is in its on condition and delivering cleaning fluid against the member **31a** the level of liquid in the reservoir will drop and when it reaches a level below the third value the filling valve **67a** may be opened and a new supply of cleaning fluid placed therein.

The cleaning fluid exits through output tube **71a** that is eventually connected to a cleaning fluid strainer or filter means **76a** which acts as a filtering device to remove particle debris which have been removed from the members during the cleaning process and may be of a commercial type as manufactured by Hayward Manufacturing Co., Inc. The straining means **76a** is connected to the pump means **59a** by the connecting tube **77a** and the pump means is adapted to pump the fluid.

The pump tube **78a** extends from the pump means **59a** and is connected to the energizing means **80a** in the form of a mechanostrictive transducer which is adapted to impart sonic energy waves to the cleaning fluid as it passes through the conduit means **52a**. The energizing means may be as discussed with respect to FIG. 6.

The cleaning fluid continues through exit tube **81a**, in the direction of arrow **82a** and enters the pressure control device **85a** which is designed and acts as a pressure relief valve which is in communication with the conduit means **52a** and is responsive to pressure in the conduit means, such that when the pressure is above a predetermined value it is automatically recycled through the recycle tube **86a** back into the connecting tube **86b** by the T joint **87a** and in through the pump means **59a**. Tube **71a** is also connected to tee joint **87a**. This occurs when the liquid level of the reservoir **54a** has reached the second value and the pump means **59a** starts operating but the member is not in position such that pressure is building up in the system and in this way the pressure control device **85a** recycles the cleaning fluid through the system without any possibility of danger due to excessive back pressure.

After leaving the pressure control device **85a** through the tube **89a** the fluid goes through the pulsation reducer means **90a** which prevents any major fluctuations and is in communication with the conduit means **52a**

to reduce any pressure surges occurring in the conduit means. The pulsation reducer means **90a** is of a commercial type and the fluid leaves the pulsation reducer **90a** through the tube **91a** which extends through partition **43a** and then by T joint **92a** is coupled to the applicator means **95a**.

The cleaning fluid **51a** used is preferably a solvent to oils and greases, and has a minimum corrosive effect on the rubber plated metals or materials from which the member is constructed. Water with a detergent has been found to be satisfactory. Numerous other cleaning fluids may be used which possess high solvent capabilities and low corrosion characteristics, which are compatible with the material from which the member is composed. The cleaning fluid should in part be in liquid form, and adapted to be cavitated by the application of sonic vibrations thereto.

Cleaning fluid applicator means

Cleaning fluid applicator means **95a** is provided within the first chamber means **36a**, and includes a pair of vertically spaced apart manifolds **96a** and **96b** connected to T **92a** with a plurality of nozzles **96c** on each manifold to provide a discharge in the form of a jet **102a** of cleaning liquid therefrom. The jets **102a** are directed at the rear **17a** of the cabinet to discharge the fluid against the member **31a**.

Cleaning fluid drainage means

After the cleaning fluid **51a** has been directed against the member **31a** for the period of time desired the spent cleaning fluid is then available for recycling through the reservoir **54a**. To accomplish this the trough **29a** is angled such that the spent cleaning fluid collects in a corner thereof and exits through the trough into opening **120a** connected to cleaning fluid drainage tube **121a**, into the reservoir **54a**. When the cleaning cycle is in process the cleaning fluid **51a** automatically flows through drainage tube **121a** into the tank. If desired it is possible to dispense with the recycling of the cleaning fluid into the reservoir means for reuse in cleaning.

At the completion of the cleaning cycle and after the cleaning fluid has been used for a number of applications it is possible to drain the reservoir means **54a** of the cleaning fluid and accumulated foreign deposits, and in which case the cleaning fluid drainage valve **125a** is opened and the cleaning fluid in the reservoir **54a** flows out through the exit tube **126a** through the outward flow tube **127a** in direction of arrow **128a**, this tube may be connected directly to a drain if desired.

Rinsing fluid applicator, supply and drainage means

To continuously remove any debris remaining after the cleaning fluid cycle is performed it is preferable for most members to apply a rinsing fluid thereto to flush away foreign deposits not previously removed. This is accomplished preferably by a number of spraying jets directed at the member from which the deposits are to be removed. The rinsing fluid applicator means **130a** is in communication with and mounted in the second chamber **36b** is fixed spaced relation to the member **31a** for spraying jets **131a** of rinsing fluid onto the member. The rinsing fluid applicator means **130a** comprise one or more nozzles **132a** and a manifold **133a** on which the nozzles **132a** are carried in spaced relation to and directed at the back wall **17a** of the second chamber **36b**. The nozzles **132a** are sufficiently spaced from the member **31a** to properly direct their spray thereagainst and obtain the desired final cleaning job.

In association with the rinsing fluid applicator means **130a** we have a rinsing fluid supply means **140a** which continuously operates from a fluid source **141a** through a fluid tube **142a** into a valve **143a** connected to the manifold **133a**.

In communication with the rinsing chamber **36b** rinsing fluid drainage means **150a** is provided for continuously removing spent rinsing fluid therefrom. A fluid removal tube **151a** is provided that is connected to the trough **29a** in a conventional manner at one end thereof and at its opposite end to a T joint **161a** which is connected by tube **162a** to valve **125a**. The rinsing fluid drainage tube is always open since the rinsing fluid continues to exit therefrom.

Energizing means

Energizing means **80a** may be utilized in conjunction with the invention for enhancing the cleaning effectiveness thereof by introducing energy waves into the stream of cleaning fluid prior to it exiting from the fluid applicator means **95a**. The energy waves are introduced in the sonic frequency range, as hereinabove defined and may be of the same construction as discussed with respect to FIG. 6.

Drying means

Drying means **160a** is contained within the drying or third chamber **36c** and includes a vertically mounted manifold **163a** containing a plurality of nozzles **164a**. A source of compressed air **165a** is connected by tube **171a** to a valve **170a** which in turn is connected to the manifold **163a**. The valve is automatically opened when the switch **49d** is activated so that jets of air may be directed against the portion of member **31a** contained in the third chamber **36c**.

The air blast removes the fluid contained on the member **31a** and drys the member before it exits from opening **26a**. The fluid collects on the trough **29a** and is removed by conduit **166a** which forms opening **167a** in the third chamber **36c** at one end thereof and at its opposite end is connected to fitting **168a** which connects by tube **169a** to fitting **161a**. The fitting **168a** is also connected to the drainage tube **127a**. If desired the drying means may include a source of heat, which may be combined with the source of air.

Operation

The operation of the equipment is essentially the same as illustrated with respect to FIGS. 1–8, except that the member **31a** is mounted to be moved on a continuous or intermittent basis through the respective chambers. The rate of movement is dependent on the size of the member as well as the accumulation of foreign deposits thereon and may be controlled by the instrument panel.

CONCLUSION

From the above disclosure, it is evident that the apparatus of this invention embraces an inter-related series of devices and instruments compactly contained in or assembled on a cabinet which can be advantageously employed for effectively and thoroughly cleaning numerous types and kinds of intricate objects and articles, and the removal of impacted debris from the minute pores, cavities, crevices, passages, channels and interstices thereof, and which could not be adequately and thoroughly cleaned by known methods and apparatus. It will be appreciated that numerous modifications and adaptations of the above-described method and apparatus may be made by the skilled in the art from the teachings of this invention, to effectuate the thorough cleaning of particular intricate objects whose crevice defining elements, parts and mechanisms are so complicated, delicate or intricate, as to defy effective cleaning by any other method.

While certain novel features of this invention have been disclosed herein and are pointed out in the claims, it will be understood that various omissions, substitutions, and

changes may be made by those skilled in the art, without departing from the teachings of this invention.

I claim:

1. Cleaning apparatus comprising:

(A) housing means providing first, second and third chambers for sequentially receiving a member to be cleaned during operation of said apparatus,

(1) said first chamber including applicator means for discharging a stream of cleaning fluid against the member to be cleaned,

(2) said second chamber including applicator means for discharging a stream of rinsing fluid against said member, and

(3) said third chamber including means for drying said member,

(B) means for sequentially conveying said member through said respective first, second and third chambers,

(C) cycle control means associated with at least said first chamber and responsive to the entering and exiting of said member through said chamber for automatically activating and then deactivating said respective cleaning fluid applicator, rinsing fluid applicator and drying means as said member progressively moves, therethrough,

(D) a reservoir adapted to contain a supply of cleaning fluid,

(E) conduit means connecting said reservoir to said cleaning fluid applicator means,

(F) means connected to said conduit means for pumping said cleaning fluid from said reservoir to said applicator means,

(G) liquid level control means operative to stop said pump means when the cleaning fluid level in said reservoir is below a predeterminded level and to start said pump means when the cleaning fluid level is above said predetermined level,

(H) cleaning fluid drainage means coupled between said first chamber and said reservoir recycling providing a conduit for said cleaning fluid into said reservoir,

(I) a pressure control means coupled to said conduit means and operative to initiate a recycling of said cleaning fluid when the fluid pressure in said conduit means is above a predetermined value,

(J) means within said conduit means for filtering said cleaning fluid, and

(K) pulsation reducer means coupled to said conduit means.

2. Apparatus as defined in claim 1, wherein

(a) said respective chambers are positioned adjacent each other and each provided with

(1) an entrance and an exit opening, said openings extending along a substantially common plane and each large enough to permit the passage of said member therethrough, and

(2) a door for each of said openings mounted to be swung open in the direction of travel of the member entering a respective chamber, and

(b) said cycle control means includes a switch associated with the entrance opening in said first chamber and exit opening in said third chamber to activate said cleaning and rinsing fluid applicators and drying means respectively.

3. Apparatus as defined in claim 2, wherein said conveying means is of an endless continuous configuration and extends beyond said chambers a sufficient distance to permit the securement of the member thereto and removal therefrom.

4. Apparatus as defined in claim 1, and further including temperature control means coupled to said reservoir and operative to heat the cleaning fluid contained therein to a predetermined temperature,

said level control means also being operative to

(a) stop the flow of cleaning fluid into said reservoir when a predetermined fluid level therein is reached, and

(b) to prevent operation of said temperature control means when said cleaning fluid is below said first mentioned predetermined level.

5. Apparatus as defined in claim 1, and further including energizing means coupled to said cleaning fluid supply means for imparting to said stream of cleaning fluid energy waves in a predetermined frequency range, whereby the cleaning effectiveness thereof is enhanced.

6. Apparatus as defined in claim 5, wherein said energy waves are in the frequency range of 60 cycles per second to 16,000 cycles per second.

7. Apparatus as defined in claim 6, wherein said energy waves are in the frequency range of 16,000 cycles per second to 500,000 cycles per second.

8. Apparatus as defined in claim 5, wherein said energizing means is in the form of a tuning fork having a pair of prongs positioned within and energized by said stream of cleaning fluid, said vibratory energy in said prongs transmitted to said cleaning fluid through said cleaning supply means.

9. Cleaning apparatus comprising,

(A) housing means providing first, second, and third chambers positioned adjacent each other and each provided with an entrance and an exit opening, said opening extending along a substantially common place and each large enough to permit the passage therethrough of a member to be cleaned during operation of said apparatus,

(B) cleaning fluid applicator means including a manifold having a plurality of nozzles conected thereto contained in said first chamber, said nozzles being positioned in spaced relation to the member to be cleaned,

(C) reservoir means adapted to contain a supply of cleaning fluid,

(D) cleaning fluid supply means including a pump connecting said reservoir to said cleaning fluid applicator means for supplying a stream of cleaning fluid thereto under high pressure for discharge by said nozzles,

(E) cleaning fluid drainage means connecting between said first chamber and reservoir for recycling spent cleaning fluid from said first chamber into said reservoir,

(F) rinsing fluid supply means,

(G) rinsing fluid applicator means mounted in said second chamber and coupled to said rinsing fluid supply means for spraying jets of rinsing fluid into said member to remove and flush away foreign deposits not removed by said cleaning fluid,

(H) rinsing fluid drainage means connected to said second chamber for removing the spent rinsing fluid therefrom,

(I) drying means connected to said third chamber to substantially remove rinsing fluid from said member,

(J) means for sequentially conveying said member through said respective first, second, and third chambers, said means including an endless conveyor communicating with said respective openings of said chambers and extending beyond said chambers a sufficient distance to permit the securement of the member thereto and removal therefrom exteriorly of said chambers,

(K) cycle control means associated with at least said first chamber and responsive to the entering and exiting of said member through said chamber for automatically activating and then deactivating said respective cleaning fluid applicator, rinsing fluid applicator and drying means as said member progressively moves therethrough, and

(L) energizing means coupled to said cleaning fluid supply means for imparting to said stream of cleaning fluid energy waves in a predetermined frequency range, whereby the cleaning effectiveness thereof is

enhanced, said energizing means is in the form of a tuning fork having a pair of prongs positioned within and energized by said stream of cleaning fluid, said vibratory energy in said prongs transmitted to said cleaning fluid through said cleaning supply means.

References Cited

UNITED STATES PATENTS

2,633,437	3/1953	Detjen	134—72 X
3,356,061	12/1967	Wiggins	134—70 X
3,014,488	12/1961	Seaman	134—52 X

2,981,265	4/1961	Robson et al.	134—57 D
2,947,312	8/1960	Heinicke	134—199 X
3,056,414	10/1962	Nolte	134—72 X
3,445,902	5/1969	Rosenberg et al.	134—72 X
3,472,249	10/1969	Jasberg	134—46
3,483,572	12/1969	Hallum	134—72 X

ROBERT L. BLEUTGE, Primary Examiner

U.S. Cl. X.R.

134—49, 57 R, 70, 83