(12) UK Patent Application (19) GB (11) 2 176 902 A

(43) Application published 7 Jan 1987

(21) Application No 8515462

(22) Date of filing 19 Jun 1985

(51) INT CL[4]
G01R 31/36

(52) Domestic classification (Edition I):
G1U BB
U1S 1820 G1U

(56) Documents cited
GB A 2121971
GB 1554011
EP A1 0003917
US 4433295
US 4390841
US 4333149
WO A1 83/02005

(58) Field of search
G1U
Selected US specifications from IPC sub-classes G01R G01N

(71) Applicant
BL Technology Limited,

(Incorporated in United Kingdom),

106 Oxford Road, Uxbridge, Middlesex UB8 1EH

(72) Inventors
Malcolm Williams,
Carmichael Mackie,
Peter Watson Barbour

(74) Agent and/or Address for Service
S. G. Unwin, ARG Patent Department, Cowley Body Plant, Cowley, Oxford OX4 5NL

(54) Method and apparatus for determining the state of charge of a battery

(57) A method of determining the state of charge of a motor vehicle battery 1 in which a stabilization load 2 is applied S_1 to the battery after the engine is switched off to accelerate the stabilization of the charge distribution within the battery. The load 2 is applied until the terminal voltage of the battery 1 reaches a level corresponding to a predicted value of the state of charge of the battery e.g. as determined using a comparator 3 and a ROM 5. After a pre-determined delay of 8 hours or less, the terminal voltage of the battery 1 is measured e.g. as in Figure 2 where temperature compensation is provided and the state of charge is derived from stored data relating terminal voltage and state of charge.

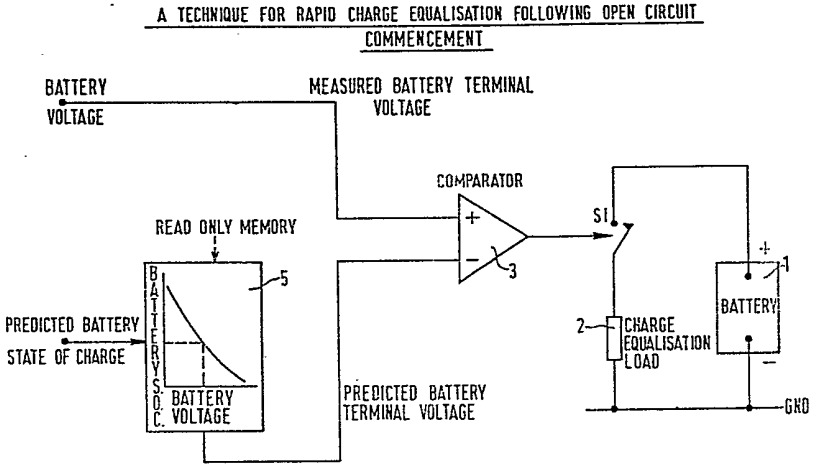

FIG. 1.

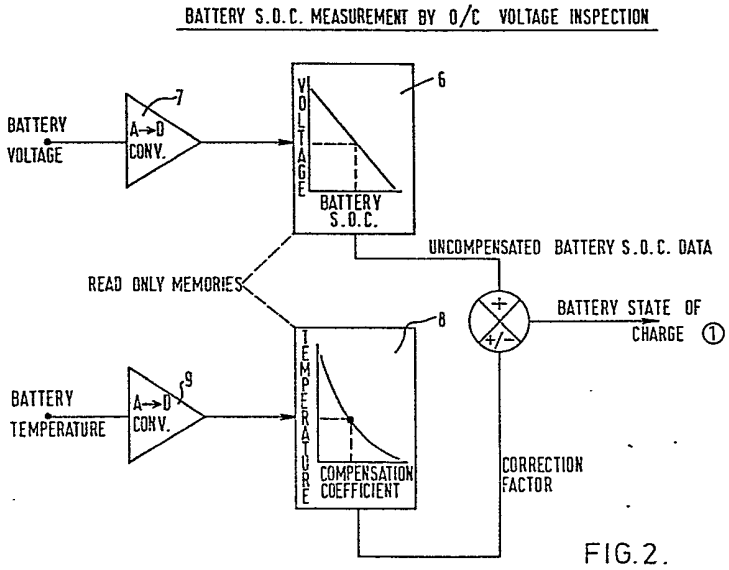

FIG. 2.

The drawing(s) originally filed was (were) informal and the print here reproduced is taken from a later filed formal copy.

GB 2 176 902 A

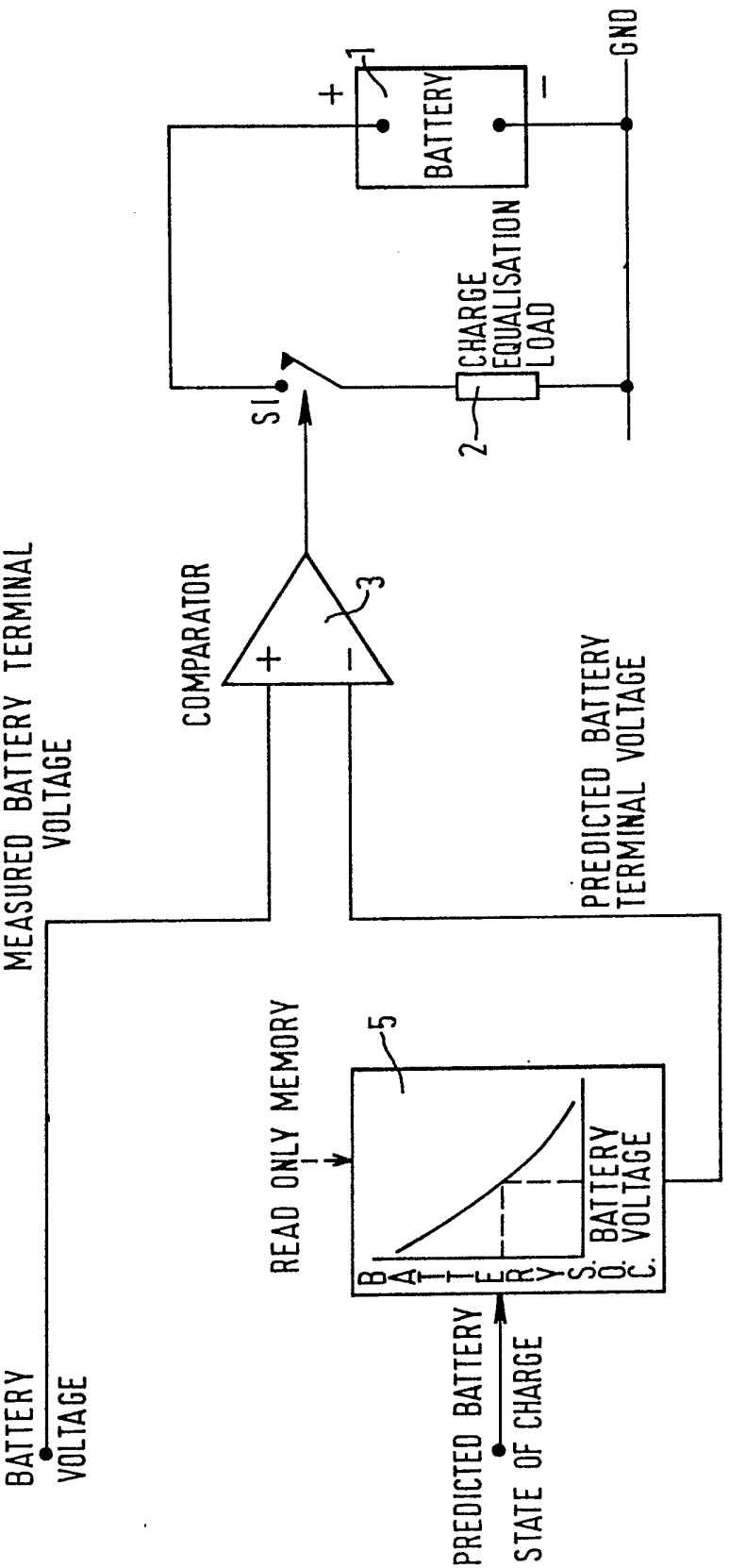
A TECHNIQUE FOR RAPID CHARGE EQUALISATION FOLLOWING OPEN CIRCUIT COMMENCEMENT
BATTERY VOLTAGE
MEASURED BATTERY TERMINAL VOLTAGE
COMPARATOR
3
S1
1
BATTERY
GND
CHARGE EQUALISATION LOAD
2
PREDICTED BATTERY TERMINAL VOLTAGE
READ ONLY MEMORY
5
BATTERY VOLTAGE
PREDICTED BATTERY STATE OF CHARGE

FIG. 1.

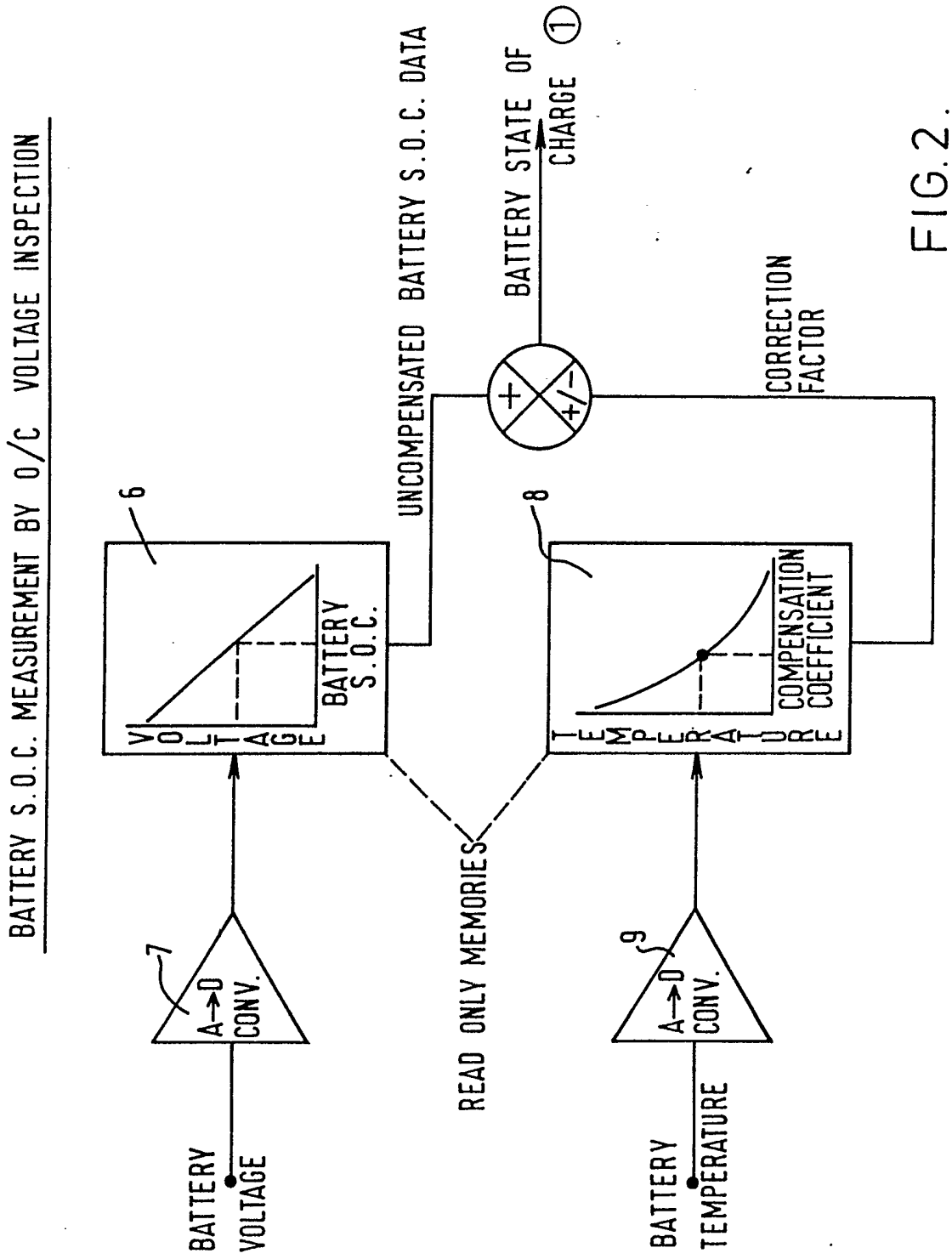
BATTERY S.O.C. MEASUREMENT BY O/C VOLTAGE INSPECTION
BATTERY VOLTAGE
A→D CONV.
7
6
VOLTAGE
BATTERY S.O.C.
UNCOMPENSATED BATTERY S.O.C. DATA
READ ONLY MEMORIES
+
+/-
BATTERY STATE OF CHARGE ①
CORRECTION FACTOR
8
TEMPERATURE
COMPENSATION COEFFICIENT
9
A→D CONV.
BATTERY TEMPERATURE

FIG. 2.

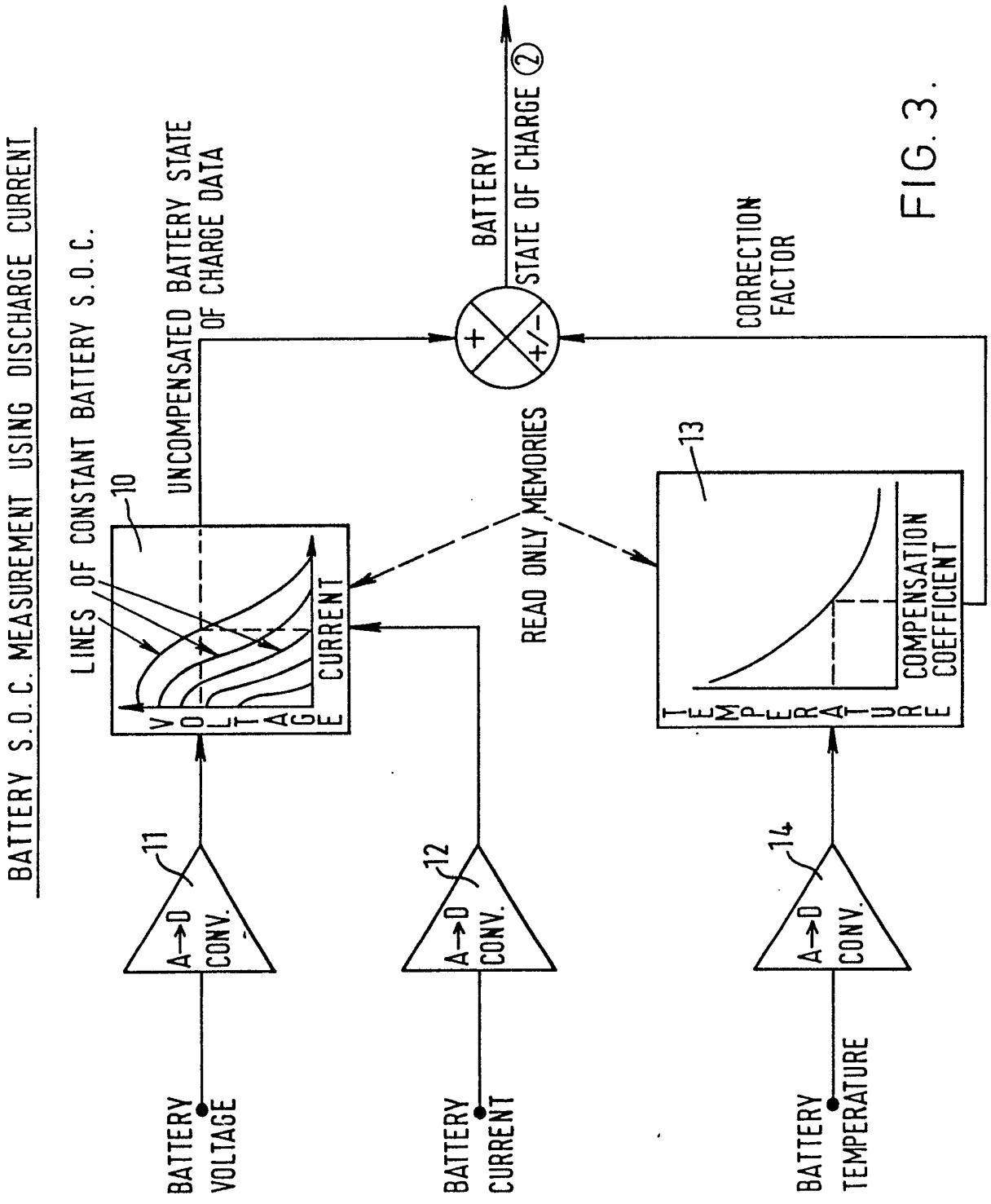
BATTERY S.O.C. MEASUREMENT USING DISCHARGE CURRENT
LINES OF CONSTANT BATTERY S.O.C.
UNCOMPENSATED BATTERY STATE OF CHARGE DATA
BATTERY STATE OF CHARGE ②
CORRECTION FACTOR
10
VOLTAGE
CURRENT
READ ONLY MEMORIES
13
TEMPERATURE
COMPENSATION COEFFICIENT
11
A→D CONV.
12
A→D CONV.
14
A→D CONV.
BATTERY VOLTAGE
BATTERY CURRENT
BATTERY TEMPERATURE

FIG. 3.

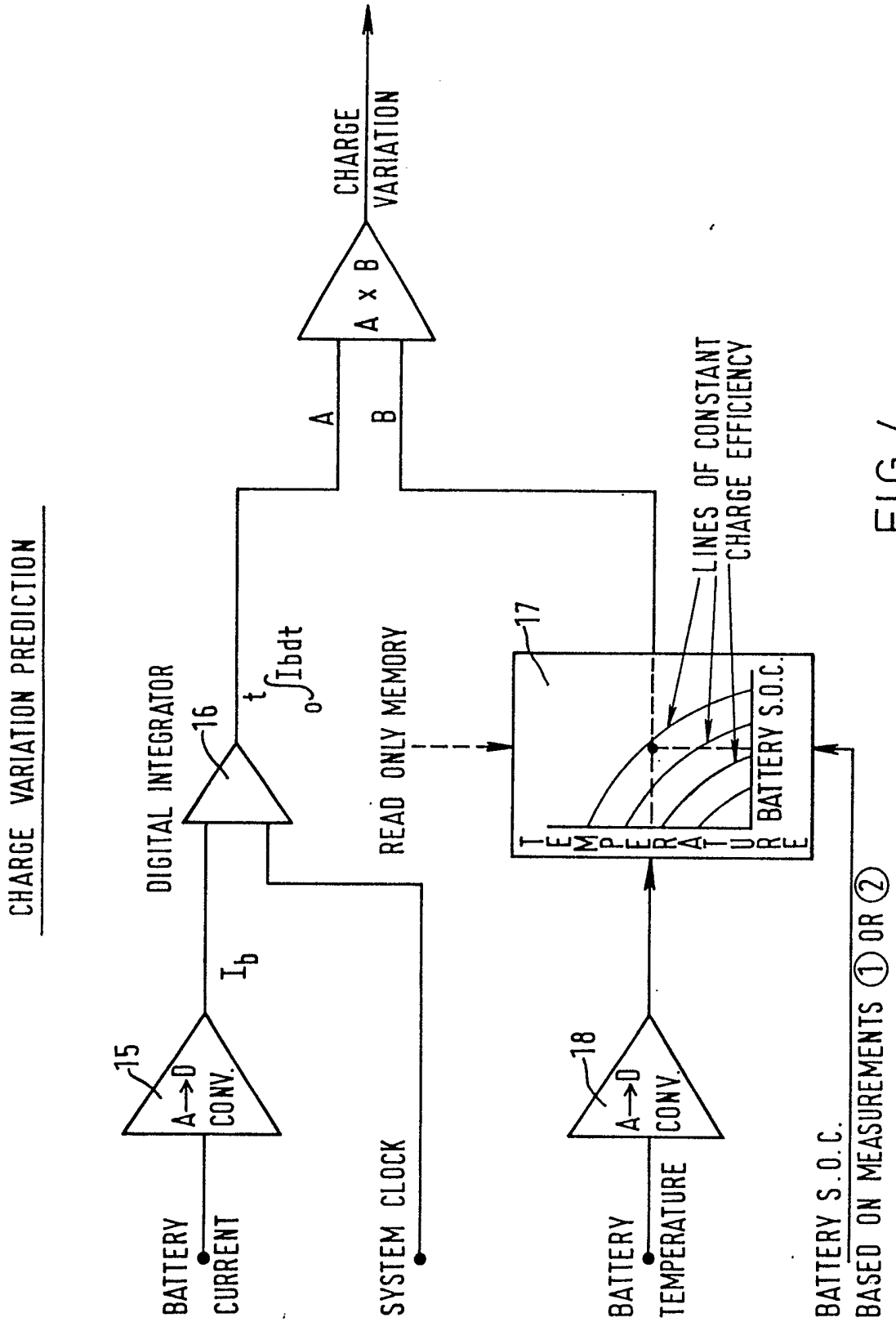
CHARGE VARIATION PREDICTION
CHARGE VARIATION
A x B
A
B
DIGITAL INTEGRATOR
16
$\int_0^t I_b dt$
READ ONLY MEMORY
17
LINES OF CONSTANT CHARGE EFFICIENCY
TEMPERATURE
BATTERY S.O.C.
15
A→D CONV.
I_b
BATTERY CURRENT
SYSTEM CLOCK
18
A→D CONV.
BATTERY TEMPERATURE
BATTERY S.O.C. BASED ON MEASUREMENTS ① OR ②

FIG. 4.

SPECIFICATION

Method and apparatus for determining the state of charge of a battery

This invention relates to a method and apparatus for determining the state of charge of a battery and, in particular, the battery of a motor vehicle.

A well known technique used in warehouses and garages for determining the state of charge of a battery involves the measurement of the open circuit terminal voltage of the battery after it has been stored for some time. The storage time is essential to allow any transient variation of charge distribution within the battery following charging or discharging thereof to stabilize and it is found that storage times of 30 hours or more are needed to obtain a reasonably accurate determination of the state of charge using this technique. Having measured the open circuit terminal voltage, a value for the state of charge is obtained from appropriate conversion tables. This technique is not able to provide an accurate determination of the state of charge soon after the battery has been subject to a charging or discharging current and is therefore unsuitable for use in determining the state of charge of a battery used in a motor vehicle which is rarely left idle for periods greater than 15 hours.

According to a first aspect of this invention there is provided a method of determining the state of charge of a battery comprising the steps of: applying a load to the battery to accelerate stabilization of the charge distribution therein after any charging or discharging current passing through the battery has fallen below a given level; measuring the terminal voltage of the battery after the said load has been removed; and evaluating the state of charge from stored data on the relationship between the terminal voltage and the state of charge of the battery.

According to a second aspect of this invention there is provided apparatus for determining the state of charge of a battery comprising: stabilization means arranged to apply a load to the battery to accelerate stabilization of the charge distribution therein after any charging or discharging current passing through the battery has fallen below a given level; measuring means arranged to measure the terminal voltage of the battery after the said load has been removed; and evaluating means arranged to evaluate the state of charge from stored data on the relationship between the terminal voltage and the state of charge of the battery.

Preferred features and uses of this invention will be apparent from the subsidiary claims of the specification.

This invention will now be described, merely by way of example, with reference to the accompanying drawings, in which:

Figure 1 is a schematic diagram of an arrangement for applying a stabilization load to a battery as used in a preferred embodiment of this invention;

Figure 2 is a schematic diagram of an arrangement for evaluating the state of charge of the battery as used in a preferred embodiment of this invention;

Figure 3 is a schematic diagram of an alternative arrangement for evaluating the state of charge of the battery;

Figure 4 is a schematic diagram of an arrangement for providing a predicted value of the state of charge of the battery as used in a preferred embodiment of this invention.

In the embodiment of the invention to be described, a stabilization load is applied to the battery being tested after any charging or discharging current flowing therethrough has fallen below a given level, this load acting to accelerate stabilization of the charge distribution in the battery and thus enabling an accurate determination of the state of charge of the battery to be effected sooner than would otherwise have been possible. The stabilization load may, typically, be applied for a period of 2 to 5 minutes and the state of charge determined after a further settling time of 8 hours or less.

The embodiments described relate to a battery of a motor vehicle and in this situation it is convenient if the stabilization load is applied to the battery when the engine of the motor vehicle is switched off and any relatively large loads on the battery, eg those due to lights and heating devices, are removed. This may be achieved by sensing when the engine is switched off and checking that any remaining discharge current is less than a value such as 50mA. The relatively small, permanent loads such as those due to electronic clocks and electronic management systems, which cannot be switched off unless the battery is disconnected have little effect upon the method.

Figure 1 illustrates a method of applying a stabilization load to a battery 1. The battery 1 to be tested may be connected to a stabilization load 2 by means of a switch S1. The switch S1 is controlled by a comparator 3 which receives as a first input a measurement of the terminal voltage of the battery 1 and a second imput from a ROM 5 connected to receive a predicted, digitised value of the state of charge of the battery 1 and to convert this into a corresponding voltage in accordance with stored data on the relationship between the terminal voltage and the state of charge of the battery. When the engine is switched off, the switch S1 is arranged to be closed by means not shown and is kept closed for a period determined by the comparator 3. In the illustrated arrangement, the load 2 is connected to the battery 1 until the terminal voltage thereof reaches a level imposed by earlier charging or discharging to a level corresponding to the predicted state of charge of the battery whereupon the output of the comparator 3 inverts and opens switch S1. The terminal voltage of the battery 1 is thus rapidly brought from a transient level corresponding to its predicted state of charge as the applied load accelerates the stabilization of charge distribution in the battery although further settling of the charge distribution will continue after application of the stabilization load. The pre-

diction of a value for the state of charge of the battery will be described in detail below with reference to Figure 4.

Once the charge distribution in the battery has stabilized to a sufficient degree by means of application of the stabilization load, a further pre-determined settling period is allowed before the state of charge of the battery is determined. This period, which may be as short as 2 hours, may be measured by any suitable timing device. Figure 2 illustrates a first method of determining the state of charge of the battery after this settling period. In this method, the terminal voltage of the battery is measured when it is on open circuit or is subject only to relatively small, permanent loads. A ROM 6 is connected to receive a measurement of the terminal voltage of the battery from an analog to digital converter 7 and is arranged to provide an uncompensated signal for the state of charge of the battery in accordance with stored data on the direct relationship between the terminal voltage and the state of charge of the battery. As this relationship is temperature dependent, this signal is subject to a correction factor provided by a ROM 8 which is connected to receive a measurement of the battery temperature from an analog to digital converter 9, the ROM 8 converting the temperature signal into a correction factor in accordance with stored data on the relationships between terminal voltage, temperature and state of charge of the battery. The outputs of the ROMs 6 and 8 are combined to produce a measurement of the state of charge of the battery. The battery temperature is measured by any suitable device such as a thermistor (not shown).

Figure 3 illustrates an alternative method of determining the state of charge of the battery after the settling period. In this method, the terminal voltage of the battery is measured whilst a known current is drawn therefrom. A ROM 10 is connected to receive a measurement of the terminal voltage and of the current drawn from the battery from analog to digitial convertors 11 and 12 and is arranged to provide an uncompensated measurement of the state of charge of the battery in accordance with stored data on the relationships between terminal voltage, drawn current and state of charge of the battery. These relationships are also temperature dependent and are therefore subject to a correction factor provided by a ROM 13 which is connected to receive a measurement of the battery temperative via an analog to digital converter 14, the ROM 13 converting the temperature measurement into a correction factor in accordance with stored data on the relationships between terminal voltage, drawn current, temperature and state of charge of the battery. The outputs of the two ROMs 10 and 13 are combined to produce a measurement of the state of charge of the battery. The current drawn from the battery is measured by the voltage across a resistor (not shown) in series with the battery making allowance, if necessary, for any small, permanent loads on the battery.

A method of providing a predicted value for the state of charge of the battery is illustrated in Figure 4. In this method, the current flowing through the battery whilst it is being charged and discharged is measured with respect to time to provide an estimate of the variation of the state of charge of the battery since the previous determination thereof and thus to provide a predicted value for the state of charge of the battery. The current flowing through the battery is measured by the voltage across a resistor (not shown) in series with the battery and this measurement is provided via an analog to digital converter 15 to a digital integrator 16 which integrates the current with respect to time to provide an approximate amp-hour signal A. As the charge efficiency of a battery is temperature dependent, the accuracy of the prediction can be improved by applying a correction factor B determined by a ROM 17 which is connected to receive a measurement of battery temperature from an analog to digital convertor 18 and to receive a signal based on the previous measurement of the state of charge of the battery. The ROM 17 is arranged to convert the measurements of temperature and previous state of charge into a correction factor in accordance with stored data on the relationships between charge efficiency, temperature and state of charge of the battery. The signals A and B are combined to provide an estimate of the variation of the state of charge of the battery since the last determination thereof from which a predicted value of the state of charge can be derived. This predicted value is used to control the duration of the stabilization load applied to the battery as described in relation to Figure 1.

The described apparatus may conveniently be in the form of a microprocessor connected to sensors measuring the various parameters required.

The methods and apparatus described above enable a reasonably accurate determination of the state of charge of the battery to be provided relatively soon after any charging or discharging current passing through the battery has fallen below the given level and it is therefore feasible for a determination of the state of charge of a battery of a motor vehicle to be accurately updated when the vehicle is left idle over night. The vehicle can therefore be provided with an indicator for providing the driver with an indication of the last determination of the state of charge of the battery and thus provide a warning if the battery is not sufficiently charged to start the engine. When the car is being used, and the battery thus subject to charging and discharging currents, the described apparatus monitors the current to provide an on-going prediction of the state of charge of the battery. This on-going prediction may, if desired, also be indicated to the driver although it is to be understood that it is merely an estimation which is used, as described above, to determine the duration of the application of the stabilization load when the state of charge is next determined after the engine is switched off and major loads on the battery removed.

The stabilization load applied to the battery may be approximately 10 amps and, as mentioned

above, may have a duration of between 2 and 5 minutes. In order to accommodate a situation in which a fault occurs which prevents the terminal voltage of the battery from reaching a level corresponding to the predicted state of charge, an upper limit of about 10 minutes is preferably applied to the duration of the stabilization load. In some circumstances, for instance when the motor vehicle is provided with a complex electronic management system or other electronic accessories which apply an appreciable permanent load on the battery, it may be found that this load is sufficient to accelerate charge stabilization within the battery without the need for applying an additional stabilization load. In these circumstances, the pre-determined settling time after the terminal voltage of the battery has reached the level corresponding to the predicted value of the state of charge is simply measured and then the state of charge of the battery is determined in the manner described.

The various relationships between terminal voltage, temperature, state of charge, etc. described above may differ for different types of battery so the apparatus described is preferably provided with a plurality of sets of data appropriate to the more common types of battery. The selection of the appropriate data set for the battery being tested may be determined by a manual adjustment of the apparatus, or alternatively, may be sensed automatically by determining the characteristics of the battery being tested by measurements of its terminal voltage and of current drawn therefrom.

It may also be advantageous for a motor vehicle to be provided with apparatus for determining the state of charge of the battery using both of the methods described in relation to Figures 2 and 3 since circumstances may arise in which one or other of these methods provides a more accurate or speedier measurement of the state of charge. The selection of the method to be used in any particular circumstance can be governed by a microprocessor in accordance with knowledge of the battery's immediate history.

The determination of the state of charge of the battery may also be used to control the charging of the battery by substantially reducing or switching off the charging current when the state of charge reaches a pre-determined level. Thermal runaway of the battery can thereby be prevented.

CLAIMS

1. A method of determining the state of charge of a battery comprising the steps of: applying a load to the battery to accelerate stabilization of the charge distribution therein after any charging or discharging current passing through the battery has fallen below a given level; measuring the terminal voltage of the battery after the said load has been removed; and evaluating the state of charge from stored data on the relationship between the terminal voltage and the state of charge of the battery.

2. A method as claimed in claim 1 in which the current passing through the battery is measured whilst it is being charged and discharged to estimate the variation in the state of charge since the previous determination thereof and thus to provide a predicted value of the state of charge of the battery.

3. A method as claimed in claim 2 in which the said load is applied to the battery for a period of time such that the terminal voltage thereof is brought to a level substantially corresponding to the predicted value of the state of charge of the battery.

4. A method as claimed in claim 2 or 3 in which the temperature of the battery is measured and the predicted value of the state of charge of the battery is modified in accordance with stored data on the relationship between temperature and the charge efficiency of the battery.

5. A method as claimed in any preceding claim in which there is a pre-determined time delay between removal of the said load on the battery and the measurement of the terminal voltage thereof.

6. A method as claimed in claim 5 in which the pre-determined time delay is 8 hours or less.

7. A method as claimed in any preceding claim in which the terminal voltage of the battery is measured when no substantial current is passing therethrough and the state of charge is evaluated from stored data on the direct relationship between the terminal voltage in such conditions and the state of charge of the battery.

8. A method as claimed in claim 7 in which the temperature of the battery is measured and the state of charge of the battery is evaluated from stored data on the relationships between the terminal voltage, the temperature and the state of charge of the battery.

9. A method as claimed in any of claims 1 to 6 in which the terminal voltage of the battery is measured when a known current is drawn therefrom and the state of charge is evaluated from stored data on the relationships between the drawn current, the terminal voltage and the state of charge of the battery.

10. A method as claimed in claim 9 in which the temperature of the battery is measured and the state of charge of the battery is evaluated from stored data on the relationships between the drawn current, the terminal voltage, the temperature and the state of charge of the battery.

11. A method as claimed in any preceding claim in which the stored data used to evaluate the state of charge of the battery is selected in accordance with the characteristics of the battery being tested.

12. A method as claimed in claim 11 in which the characteristics of the battery being tested are determined by measurements of the terminal voltage and of current drawn from the battery.

13. A method as claimed in any preceding claim in which the load applied to the battery is approximately 10 amps and is applied for between 2 and 5 minutes.

14. A method of determining the state of charge of a battery of a motor vehicle as claimed in any preceding claim in which the said given

level is such that the said load is applied to the battery when the engine of the vehicle is switched off and any remaining discharging current is due only to permanent loads.

15. A method of determining the state of charge of a battery in which the state of charge is selectively evaluated in accordance with claim 7 or any claim dependent thereon or in accordance with claim 9 or any claim dependent thereon.

16. A method of controlling the charging of a battery in which the state of charge thereof is determined in accordance with any preceding claim and the charging current is substantially reduced or switched off when the evaluated state of charge reaches a pre-determined level to thereby prevent thermal run away of the battery.

17. A method substantially as hereinbefore described with reference to the accompanying drawings.

18. Apparatus for determining the state of charge of a battery comprising: stabilization means arranged to apply a load to the battery to accelerate stabilization of the charge distribution therein after any charging or discharging current passing through the battery has fallen below a given level; measuring means arranged to measure the terminal voltage of the battery after the said load has been removed; and evaluating means arranged to evaluate the state of charge from stored data on the relationship between the terminal voltage and the state of charge of the battery.

19. Apparatus as claimed in claim 18 comprising monitoring means arranged to measure the current passing through the battery whilst it is being charged or discharged to estimate the variation in the state of charge since the previous determination thereof and arranged to provide a predicted value of the state of charge of the battery.

20. Apparatus as claimed in claim 17 comprising control means arranged to remove the said load on the battery when the measured terminal voltage reaches a level corresponding to the predicted value of the state of charge of the battery.

21. Apparatus as claimed in claim 18, 19 or 20 comprising sensing means arranged to sense the temperature of the battery and in which the evaluating means is arranged to evaluate the state of charge from stored data on the relationships between the terminal voltage, the temperature and the state of charge of the battery.

22. A motor vehicle having apparatus as claimed in any of claims 18 - 21 in which the stabilization means is arranged to apply the said load to the battery when the engine of the motor vehicle is switched off and any remaining discharging current is due only to permanent loads.

23. A motor vehicle as claimed in claim 22 comprising indicating means for providing the driver with an indication of the most recent evaluation of the state of charge of the battery.

24. Apparatus substantially as hereinbefore described with reference to the accompanying drawings.

Printed in the UK for HMSO, D8818935, 11/86, 7102.
Published by The Patent Office, 25 Southampton Buildings, London, WC2A 1AY, from which copies may be obtained.