Nov. 2, 1954 I. V. JACOBSÉN 2,693,042

METHOD OF STARCHING FABRICS

Filed Sept. 8, 1949

FIG. 1

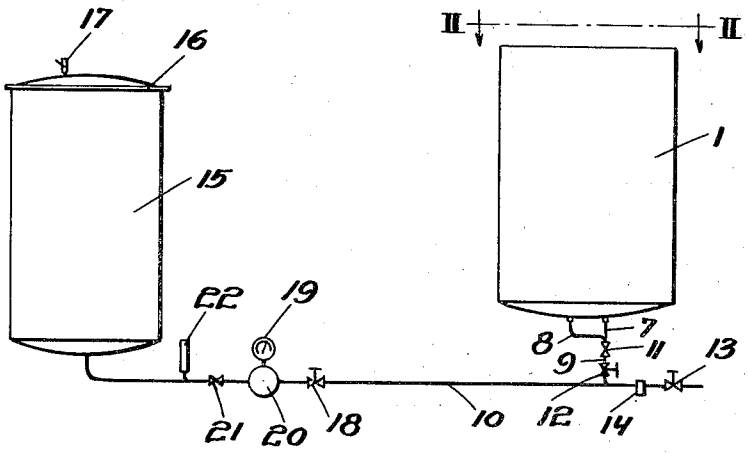

FIG. 2

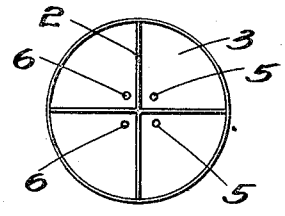

FIG. 3

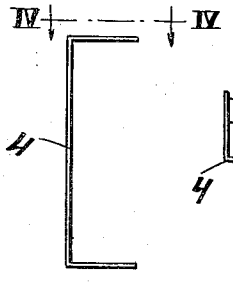

FIG. 4

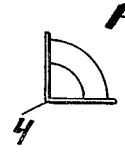

Inventor:
I. V. Jacobsén
By
C. F. Kenderoth
Atty

United States Patent Office 2,693,042 Patented Nov. 2, 1954

2,693,042

METHOD OF STARCHING FABRICS

Ingvar Valdemar Jacobsén, Skelleftea, Sweden

Application September 8, 1949, Serial No. 114,503

4 Claims. (Cl. 38—144)

This invention relates to a method of starching clothes of various kinds and particularly such as, for instance, shirts the different parts of which, such as the front, the collar band and the cuffs, are required to be starched to different degrees of stiffness, and in which, after having been washed, the articles to be starched are introduced in a starch bath after which they are dried and ironed.

The invention has for its object to enable a more effective and satisfactory starching than has hitherto been possible, and also to enable a considerably greater number of articles to be starched at one time than has been possible with the hitherto known methods.

The method according to this invention is mainly characterized by the fact that the articles are caused to absorb starch, preferably by being placed in open starch baths through which air or other gas is caused to bubble up, and that the articles thereafter, but before their drying and ironing, are placed in a gas pressure chamber into which is led compressed air or other suitable gas of a pressure above atmospheric, say, about 30 lbs. per sq. in. above atmospheric.

According to the invention the compressed gas may suitably be set in motion in the pressure chamber, for instance by providing the latter with a leak valve.

As the compressed gas or air it may be suitable to utilize the one which is used for driving the ironing machines necessary for the ironing operation.

Further features of the invention will appear from the following more detailed description of the same, reference being made to the accompanying drawing illustrating by way of example a constructional form of a plant for carrying out the method. In the drawing:

Fig. 1 is a diagrammatic illustration of the plant for carrying out the method according to the invention, said plant comprising, among other components, a starch container and a pressure chamber.

Fig. 2 is a plan view of the starch container as seen according to the line II—II in Fig. 1.

Fig. 3 is a side view of a carrier or rack which is intended to support the articles to be starched.

Fig. 4 is a view of the said carrier or rack as seen according to the line IV—IV in Fig. 3.

Referring to the drawing, the numeral **1** designates an open-top starch container which, as indicated in Fig. 2, is divided by partitions **2** into four segments **3** which are intended to receive a starch solution which, preferably, may consist of rice starch dispersed in water. The strength or concentration of this starch solution may suitably vary from one segment to another so that, in applying the starching method according to the invention, both stiffly, medium stiffly and softly starched clothes, such as collars, are obtainable.

Into each one of the segments **3** a carrier or rack **4** is intended to be inserted, the shape of said rack being shown in Figs. 3 and 4, and on which rack the clothes to be starched, such as collars, are intended to be fastened in slightly spaced interrelation. For this purpose the racks are provided with fastening elements, not shown, which may take any one of several possible forms.

The bottom of the container **1** is provided with four openings **5**, **6** each one of which communicates with one of the four segments **3** and which through piping **7**, **8** and **9** are connected to a supply duct **10** for supplying a pressure fluid consisting of, for instance, compressed air, such as that used for driving the ironing machines of a laundry. The duct **9** contains a non-return valve **11** and also a stop cock **12** for cutting off the supply of compressed air to the starch container **1** when the latter is not taken into requisition for impregnating the clothes with starch solution.

The pressure supply duct **10**, being provided upstream of the point of branching off the pipe **9** with a main stop cock **13** and air filter **14**, is connected to a pressure chamber **15** which is provided with a removable cover **16** provided with suitable attaching and sealing means, not shown, and having a relief cock **17** therein.

The relief cock **17** is intended to enable motion of the compressed air in the pressure chamber **15** when under pressure.

In the supply duct **10**, between the starch container **1** and the pressure chamber **15**, there is connected a cut-off valve **18**, a pressure reduction valve **20** provided with a manometer **19**, a non-return valve **21** and a relief valve **22**.

The starching of various kinds of clothes, such as collars, by means of the plant described may be carried out in the following way:

After washing the collars and centrifugating the same in order to remove water, the collars are fastened to the racks **4** in slightly spaced relation after which the racks carrying the collars are placed in the different segments **3** of the starch container **1**.

By maintaining the stop cocks **12** and **13** slightly open the different segments **3** of the starch container will be supplied with compressed air which gently bubbles through the different starch solutions of different strengths or concentrations in said container segments.

After the collars having been impregnated with solution, which generally will take about one minute, they are transferred to the pressure chamber **15**, the cover **16** of which is tightened so as to be hermetically sealed to the pressure chamber. Thereafter the cut-off valve **18** and the relief cock **17** are opened whereby compressed air will be supplied to the pressure chamber **15** through which the compressed air supplied will flow at a low rate owing to the fact that a portion of the compressed air will leak off through the relief cock **17**.

The compressed air supplied to the pressure chamber **15**, and being suitably of a pressure of, say, 30 or 45 lbs. per sq. in. above atmospheric, causes the starch effectively to penetrate into the different fabric layers of each collar.

The circulation of the air in the pressure chamber arising due to the relief cock **17** being slightly open will prevent the collars from clustering together and will also promote the penetration of the starch into the fabric of the collars.

After the starch has penetrated satisfactorily into the fabric of the collars placed in the pressure chamber **15**, which will take a time of about five minutes, the cut-off valve **18** is closed after which the cover **16** is removed and the collars are transferred to the ironing machines to be ironed and finished.

As concerns the starch baths in the starch container **1**, they should continuously be passed by compressed air in order to cause the starch to be prepared for immediate use at any time. Without this air supply the starch would soon precipitate onto the bottom which is of great disadvantage because much work is involved in restoring the starch to an available condition. In addition, the air supply to the starch container **1** prevents the starch bath from getting sour during the hot season, as is otherwise often the case. By this means the necessity of refusing the baths and the consequent great loss due to the high starch price are obviated.

The invention is not restricted to the embodiment described and illustrated in the drawing by way of example, it being capable of being varied in several ways within the scope of the appended claims.

Accordingly, in those cases where compressed air is not used for driving the ironing machines, the air or gas may be supplied to the pressure chamber by a small separate compressor which may be power driven or manually operated.

With respect to the advantages of the method of the present invention it proved that the quantity of starch that the cloth absorbs at one single dipping into a rice starch bath is sufficient for effective starching and by the

pressure in the gas chamber is pressed into all the linen layers of a collar so effectively that an adhesion preventing all sorts of bubbles or blisters on the starched and ironed collar will be obtained between the various layers of the collar. The various layers adhere so strongly that it is hardly impossible to separate them by cutting the collar and introducing a knife blade between the layers. Further the treatment in the gas chamber gives the cloth a transparent clear and water-blue coating that has never been obtained by prior methods which give a milk white coating containing a lot of starch particles. Consequently the gas chamber treatment eliminates the rubbing of the starch impregnated cloth that was necessary at prior methods in order to remove the milk white coating and to have the starch worked in into the inner layer of the cloth. The gas pressure treatment seems to have a separating effect on the water and the starch in the starch solution that adheres the cloth when it is taken out from the starch bath.

When starching clothing, the various parts of which shall get different stiffness, various starch bath with different concentrations are used at the impregnating step before the gas pressure treatment. In case of a dress shirt three baths are used and the cuffs are dipped into the bath with the highest concentration, the front into the bath of middle strong concentration and the collar band into the bath of the lowest concentration. After taking out the cuffs, the front and the collar band from the baths the dress skirt is rolled and introduced into the gas chamber where a pressure of for instance 60 lbs. per sq. in. is applied during five minutes.

As to the impregnating step the rice bath may be prepared in the same way and may have the same concentration as used in old starching methods by hand. Further, the impregnation may be performed by other methods than by dipping, for instance by throwing the starch dispersion onto the cloth.

The pressure at the gas chamber treatment may vary within wide limit, for instance from about 30 to about 150 lbs. per sq. in. but a range of from about 60 to about 90 lbs. per sq. in. is preferred.

As to the temperature at the gas pressure treatment the advantages mentioned above have been obtained with a temperature of the same order as the room temperature in laundries, but also other temperatures, higher or lower ones, may be used, provided that the temperature used does not destroy the starch.

What I claim and desire to secure by Letters Patent is:

1. A method of starching cloth articles of various kinds, comprising the steps of contacting said articles with a starch solution and simultaneously bubbling a gas through said solution for at least partially impregnating said articles with the starch solution, removing said articles from said contact, thereafter placing said articles in a gas pressure chamber, applying a pressure of at least about 60 pounds per square inch in said gas pressure chamber while circulating the gas to press the solution into the articles and at the same time prevent clustering of the articles and thereafter removing said articles from the pressure chamber.

2. A method of starching cloth articles of various kinds, comprising the steps of contacting said articles with a starch solution and simultaneously bubbling a gas through said solution for at least partially impregnating said articles with a starch solution, removing said articles from said contact, thereafter introducing said articles in a gas pressure chamber, applying a pressure of from about 60 to about 90 pounds per square inch in said gas pressure chamber while circulating the gas to press the solution into the articles and at the same time prevent clustering of the articles, removing said articles from said gas pressure chamber and ironing said articles.

3. A method of starching cloth articles one part of which has to be starched to another degree of stiffness than another part, as claimed in claim 1, comprising dipping said first mentioned part in one open starch bath and said last mentioned part in another separate open starch bath, said baths having different strength, constantly bubbling a gas through said baths, removing said parts of said article from said starch baths, placing said articles in a gas pressure chamber, applying a pressure above atmospheric in said pressure chamber while circulating the gas to prevent clustering of the articles, removing said articles from said gas pressure chamber and ironing said articles.

4. A method as claimed in claim 1, in which said pressure in said chamber is applied for a time of approximately five minutes and said pressure being approximately 60 pounds per square inch above atmospheric.

References Cited in the file of this patent

UNITED STATES PATENTS

Number	Name	Date
987,629	Ketcheson	Mar. 21, 1911
1,418,273	Benjamin	June 6, 1922
1,837,527	Briscoe	Dec. 22, 1931
2,005,637	Schidrowitz	June 18, 1935
2,052,354	Koplin	Aug. 25, 1936
2,149,046	Finnel	Feb. 28, 1939
2,231,458	Trowell	Feb. 11, 1941
2,270,841	Bock	Jan. 27, 1942

FOREIGN PATENTS

Number	Country	Date
14,193	Great Britain	1905